Kimley-Horn
and Associates, Inc.

655 North Franklin Street
Suite 150
Tampa, Florida 33602

ENGINEERING MEMORANDUM

From: Jode L. Ballard, P.E.
Kimley-Horn and Associates, Inc.

Date: September 26, 2012

Re: **Additional Sign Panel on Four Existing Mast Arm Assemblies**
CR 466A & Buena Vista Boulevard and CR 466A & Morse Boulevard

The mast arm assemblies were reviewed for the addition of a sign panel (7 feet horizontal by 1.5 foot vertical) on the northwest and southeast corner of CR 466A &Buena Vista Boulevard, as well as the northwest and southwest corner of CR 466A & Morse Boulevard.

Northwest Corner of CR 466A &Buena Vista Boulevard (mast arm assembly 1)
The mast arm assembly 1 is proposed to have the additional sign panel attached to a stand-alone sign bracket that is attached to the mast (upright pole) of the mast arm assembly. Therefore, the additional sign is not to be mounted on the arm of the mast arm assembly. The proposed sign placement does not adversely impact the arm's loading capacity of the installed FDOT standard mast arm assembly.

Southeast Corner of CR 466A &Buena Vista Boulevard (mast arm assembly 3)
The mast arm assembly 3 is proposed to have the additional sign panel attached to the arm of the mast arm assembly at a horizontal distance of five (5) feet from the arm base plate to the center of the sign. The proposed sign placement is within the loading capacity of the installed FDOT standard mast arm assembly.

Northwest Corner of CR 466A & Morse Boulevard (mast arm assembly 5)
The mast arm assembly 5 is proposed to have the additional sign panel attached to the arm of the mast arm assembly at a horizontal distance of thirty-nine (39) feet from the arm base plate to the center of the sign. The proposed sign placement is within the loading capacity of the installed FDOT standard mast arm assembly.

Southwest Corner of CR 466A & Morse Boulevard (mast arm assembly 8)
The mast arm assembly 8 is proposed to have the additional sign panel attached to the arm of the mast arm assembly at a horizontal distance of nine (9) feet from the arm base plate to the center of the sign. The proposed sign placement is within the loading capacity of the installed FDOT standard mast arm assembly.

TEL 813 620 1460

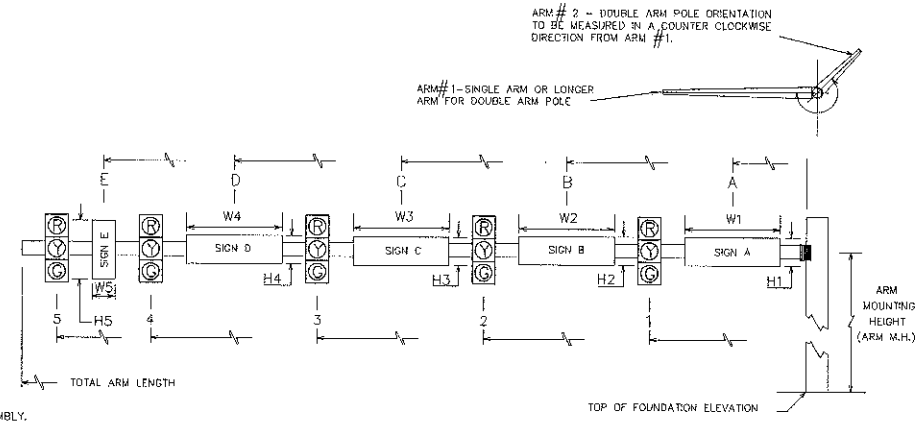

NOTES:

1. STREET NAME SIGN IS MOUNTED TO UPRIGHT POLE.

*DENOTES NUMBER OF SECTIONS IN SIGNAL HEAD ASSEMBLY.

ID NO.	SHEET NO.	LOCATION BY STA.	TOP OF FOUNDATION ELEVATION	RDWY ARM NO.	CROWN ELEV.	SIGNAL DATA: SIGNAL V/H	BACK PLATES V/N	PED. SIGNAL Y/N	DISTANCE FROM POLE 1	*	2	*	3	*	4	*	5	*	TOTAL ARM LENGTH	ARM M.H.	∠ BETWEEN DUAL ARMS 90/270
1	T-3	135+45.5, 74.5' L	–	1	65.5	V	N	N	20.0	3	32.0	3	44.0	3	56.0	3	–	–	60	22.0	
				2																	
2	T-3	136+96.5, 73.3' L	–	1	–	V	N	N	35.75	3	53.75	5	–	–	–	–	–	–	58	22.0	
				2																	
3	T-3	136+91.8, 61.0' R	–	1	–	V	N	N	30.75	3	48.75	5	54.25(F)	3	55.25(F)	3	–	–	70.5	22.0	
				2																	
4	T-3	136+48.2, 65.7' R	–	1	–	V	N	N	29.25	3	47.25	5	–	–	–	–	–	–	52	22.0	
				2																	
5	T-4	244+24.0, 75.5' L	–	1	80.5	V	N	N	33.5	3	51.5	5	59.5(F)	3	–	–	–	–	62	22.0	
				2																	
6	T-4	245+85.5, 77.3' L	–	1	–	V	N	N	28.0	3	46.0	5	–	–	–	–	–	–	50	22.0	
				2																	
7	T-4	245+98.7, 86.8' R	–	1	–	V	N	N	28.75	3	44.75	5	50.5(F)	3	61.5(F)	3	–	–	64	22.0	
				2																	
8	T-4	244+45.8, 63.2' R	–	1	–	V	N	N	30.0	3	48.0	5	–	–	–	–	–	–	52	22.0	
				2																	
9	T-5	263+19.5, 53.2' L	–	1	80.75	V	N	N	29.50	3	48.0	5	–	–	–	–	–	–	52	22.0	
				2																	
10	T-5	264+17.3, 69.4' L	–	1	–	V	N	N	35.75	3	44.0	5	–	–	–	–	–	–	50	22.0	
				2																	
11	T-5	264+16.0, 52.6' R	–	1	–	V	N	N	29.6	3	41.6	5	–	–	–	–	–	–	44	22.0	
				2																	
12	T-5	263+22.0, 55.0' R	–	1	–	V	N	N	18.25	3	30.5	5	–	–	–	–	–	–	36	22.0	
				2																	
13	T-6	273+37.5, 62.6' L	–	1	72.1	V	N	N	31.0	3	48.75	5	–	–	–	–	–	–	54	22.0	
				2																	
14	T-6	274+42.1, 68.5' L	–	1	–	V	N	N	38.0	3	46.0	5	–	–	–	–	–	–	50	22.0	
				2																	
15	T-6	274+34.1, 53.9' R	–	1	–	V	N	N	31.5	3	43.5	5	–	–	–	–	–	–	48	22.0	
				2																	
16	T-6	273+48.1, 61.4' R	–	1	–	V	N	N	20.0	3	32.0	5	–	–	–	–	–	–	36	22.0	
				2																	

ID NO.	SIGN DATA: DISTANCE FROM POLE / HEIGHT AND WIDTH OF SIGN: A	H1	W1	B	H2	W2	C	H3	W3	D	H4	W4	E	H5	W5	PAINT COLOR
1	26.0	18"	72"	12'	18"	72"	NOTE 1	18"	84"	–	–	–	–	–	–	BLACK
2	23.75	18"	72"	–	–	–	–	–	–	–	–	–	–	–	–	BLACK
3	18.0	18"	72"	60'	18"	72"	5'	18"	84"	–	–	–	–	–	–	BLACK
4	17.25	18"	72"	–	–	–	–	–	–	–	–	–	–	–	–	BLACK
5	21.5	18"	72"	11'	18"	72"	39	18"	84"	–	–	–	–	–	–	BLACK
6	16.0	18"	72"	–	–	–	–	–	–	–	–	–	–	–	–	BLACK
7	15.0	18"	72"	–	–	–	–	–	–	–	–	–	–	–	–	BLACK
8	18.0	18"	72"	9'	18"	84"	–	–	–	–	–	–	–	–	–	BLACK
9	20.25	18"	72"	–	–	–	–	–	–	–	–	–	–	–	–	BLACK
10	30.0	18"	72"	–	–	–	–	–	–	–	–	–	–	–	–	BLACK
11	16.3	18"	72"	–	–	–	–	–	–	–	–	–	–	–	–	BLACK
12	12.75	18"	72"	–	–	–	–	–	–	–	–	–	–	–	–	BLACK
13	24.0	18"	72"	–	–	–	–	–	–	–	–	–	–	–	–	BLACK
14	32.0	18"	72"	–	–	–	–	–	–	–	–	–	–	–	–	BLACK
15	25.3	18"	72"	–	–	–	–	–	–	–	–	–	–	–	–	BLACK
16	14.0	18"	72"	–	–	–	–	–	–	–	–	–	–	–	–	BLACK

DATE	REVISIONS	BY

Kimley-Horn and Associates, Inc.
© 2012 KIMLEY-HORN AND ASSOCIATES, INC.
1625 SE FORT KING STREET, SUITE 200, Ocala, Florida 34471
Phone: (352) 438-2009
CA No. 00000696

The City of Bradenton

CR-466-A
BROOKWOOD

MAST ARM SCHEDULE

DATE 04-24-12
DRAWN BY DSC
CHKD BY JDT

ENGINEER: JONATHAN D. THIGPEN, P.E. #67911
DATE:

SHT T-8 OF 11

Drawing name: K:\DOA_TPTO\Q4023\B0022.2166- Sign Plan Updates\Brookwood\Code\Plan Sheets\Brookwood.dwg MAST ARM SCHEDULE Sep 26, 2012 3:38pm by: darrell.courtney

This document, together with the concepts and designs presented herein, as an instrument of service, is intended only for the specific purpose and client for which it was prepared. Reuse of and improper reliance on this document without written authorization and adaptation by Kimley-Horn and Associates, Inc. shall be without liability to Kimley-Horn and Associates, Inc.

NOTES:

1. CONTRACTOR SHALL VERIFY THE POLE TYPE, THE DIMENSIONS OF THE POLE AT THE POINT OF INSTALLATION OF THE SIGN BRACKET AND ANGLE BEFORE MANUFACTURING SIGN BRACKET. THE CONTRACTOR SHALL VERIFY ANGLE, Φ, PRIOR TO FIELD DRILLING 13/16" Φ HOLE IN 4½" Φ PIPE.

2. DESIGN WIND SPEED = 130 MPH. WORKING LOADS FROM THE INTERNALLY ILLUMINATED SIGN AND CANTILEVER ARM AT THE CENTER OF THE VERTICAL PIPE ARE AS FOLLOWS:

HORIZONTAL MOMENT	= 5500 FT LBS
VERTICAL MOMENT	= 1222 FT LBS
HORIZONTAL SHEAR	= 1069 LBS
VERTICAL SHEAR	= 242 LBS

3. THE CONTRACTOR MAY PROPOSE AN ALTERNATIVE SIGN BRACKET ARM IN PLACE OF THE DESIGN ON THIS SHEET AT NO ADDITIONAL COST TO THE DEPARTMENT. THE CONTRACTOR'S ALTERNATIVE SHALL BE DESIGNED IN ACCORDANCE WITH THE LATEST EDITION OF THE DEPARTMENT'S PLANS PREPARATION MANUAL AND THE LATEST EDITION OF AASHTO'S STANDARD SPECIFICATIONS FOR STRUCTURAL SUPPORTS FOR HIGHWAY SIGNS, LUMINAIRES, AND TRAFFIC SIGNALS. THE DESIGN AND THE SHOP DRAWINGS SHALL BE PREPARED BY A PROFESSIONAL ENGINEER REGISTERED IN THE STATE OF FLORIDA AND SHALL BE SUBMITTED BY THE CONTRACTOR TO THE ENGINEER FOR REVIEW AND APPROVAL PRIOR TO FABRICATION.

4. ALL STRUCTURAL STEEL EXCEPT FOR STRUCTURAL TUBING SHALL CONFORM TO ASTM A572 GR 50. STRUCTURAL TUBING SHALL CONFORM TO ASTM DESIGNATION A53 GRADE B. ALL BRACKET PLATES SHALL BE HOT BENT.

5. ALL BOLTS SHALL BE HIGH STRENGTH A325 BOLTS AND SHALL RECEIVE ELECTRODEPOSITED COATING IN ACCORDANCE WITH ASTM B633.

6. COMPLETE ASSEMBLY SHALL BE HOT-DIPPED GALVANIZED IN ACCORDANCE WITH ASTM DESIGNATION A123.

7. WELD DETAILS AND THE OPERATION OF WELDING SHALL BE IN ACCORDANCE WITH THE CURRENT EDITION OF THE ANSI/AASHTO/AWS D1.5 BRIDGE WELDING CODE. HOLLOW STRUCTURAL SECTION CONNECTIONS SHALL ALSO MEET THE REQUIREMENTS OF AWS D1.1 CHAPTER 10. ELECTRODES SHALL HAVE A 70 KSI MINIMUM TENSILE STRENGTH.

8. NO FIELD WELDING SHALL BE PERMITTED.

9. SIGN TO BE LEVEL AFTER INSTALLATION.

10. ALL MATERIALS AND LABOR REQUIRED TO FURNISH AND INSTALL THE SIGN BRACKET SHALL BE INCLUDED IN PAY ITEM 699-1-AB OR 700-48-AB.

11. WHEN NON-INTERNALLY ILLUMINATED SIGN PANELS ARE CALLED FOR IN THE PLANS, THE CONTRACTOR SHALL MEET ALL REQUIREMENTS AS FOUND IN SECTION 700 OF THE DEPARTMENT'S STANDARD SPECIFICATIONS FOR ROAD AND BRIDGE CONSTRUCTION AND SUPPLEMENTS THERETO.

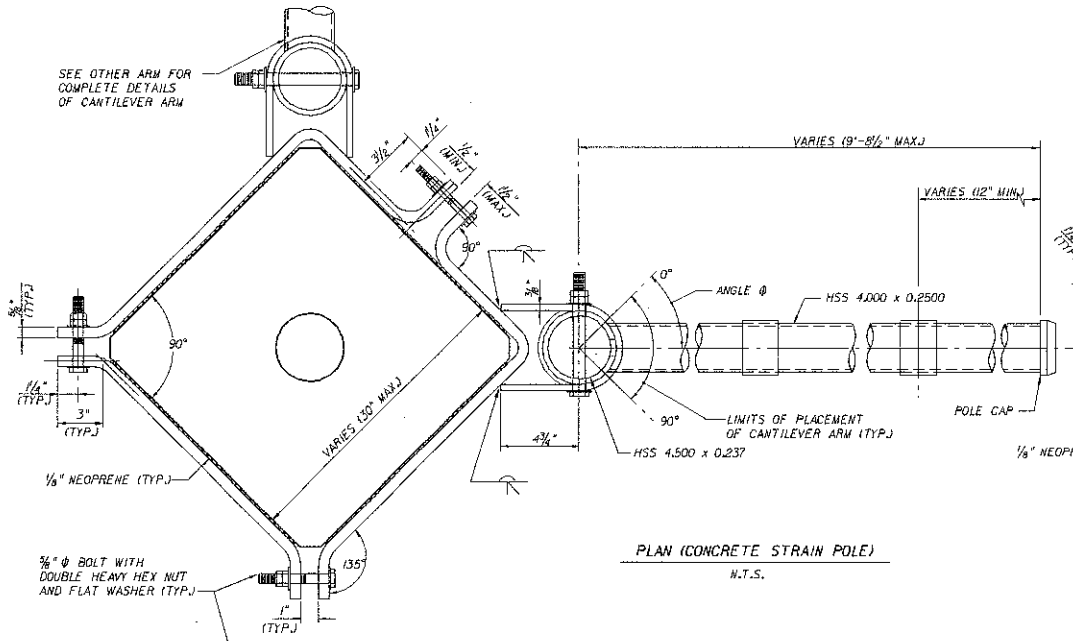

PLAN (CONCRETE STRAIN POLE)

N.T.S.

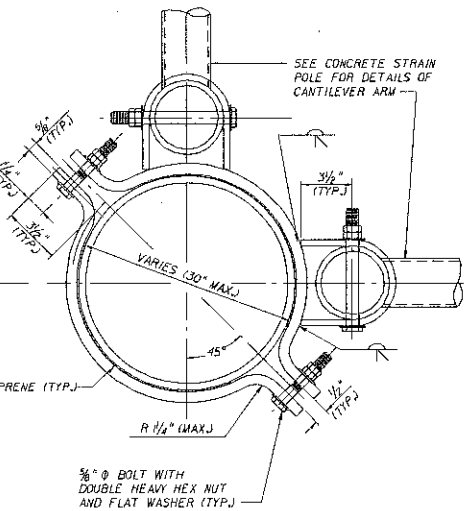

PLAN (ROUND STEEL POLE)

N.T.S.

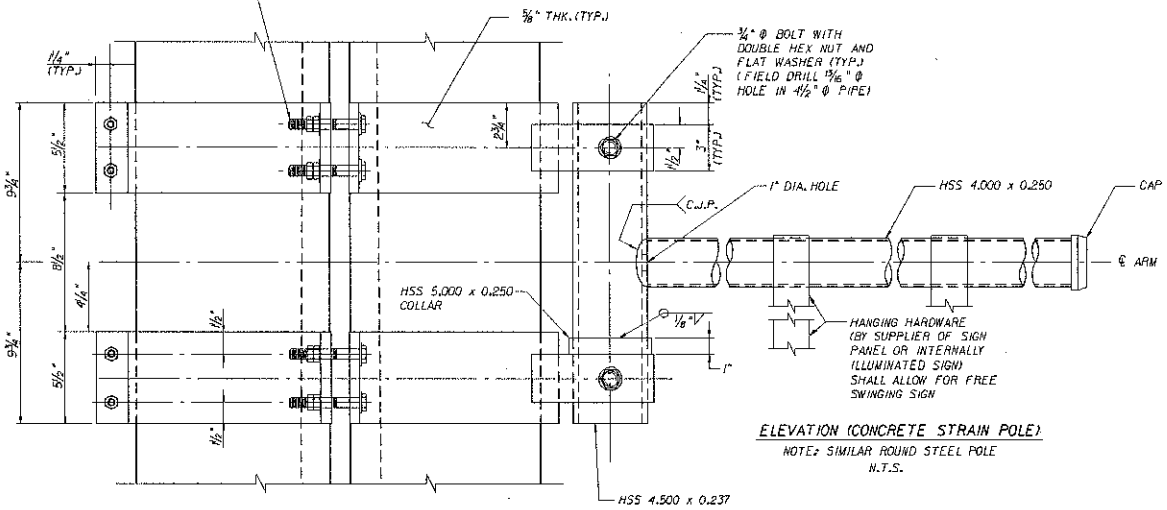

ELEVATION (CONCRETE STRAIN POLE)

NOTE: SIMILAR ROUND STEEL POLE

N.T.S.

NOTES TO THE DESIGNERS:

1. THE LOCATION OF THE SIGN BRACKET ARM ON THE STRAIN POLE MUST BE SPECIFIED IN THE PLANS.

2. THE MAXIMUM SIZE OF INTERNALLY ILLUMINATED SIGNS USED SHALL BE 9'-0" LONG AND 2'-0" HIGH. THE MAXIMUM SIZE OF SIGN PANELS USED SHALL BE 18 SF WITH MAXIMUM SIGN LENGTH OF 9'-0".

3. SEE SHEET 3 OF 3 FOR DETAILS ON NON-INTERNALLY ILLUMINATED SIGN PANELS.

REVISIONS					
DATE	BY	DESCRIPTION	DATE	BY	DESCRIPTION

	NAMES	DATES
DRAWN BY		
CHECKED BY		
DESIGNED BY		
CHECKED BY		
APPROVED BY		

ENGINEER OF RECORD:

FLORIDA DEPARTMENT OF TRANSPORTATION

ROAD NO.	COUNTY	FINANCIAL PROJECT ID

SHEET TITLE: SIGN BRACKET ARM (TWO WAY)

PROJECT NAME: INDEX 212

SHEET NO. 2 OF 3

SIGN NAME	Brownwood	QTY	1	SIGN NUMBER	STATION(S)
PANEL		BORDER			none
WIDTH	7'-0"	WIDTH	0"		
HEIGHT	1'-6"	WIDTH	3"		
LEGEND	White	COLOR	White		
COLOR	Green				

SYMBOL(S)	ANGLE	X	Y	WD	HT
AR_Type D	90	6	6	6	9

SIGN NUMBER	NUMBER OF POSTS	DISTANCE Edge Of Lane	CROSSING SIZE			AVERAGE LENGTH

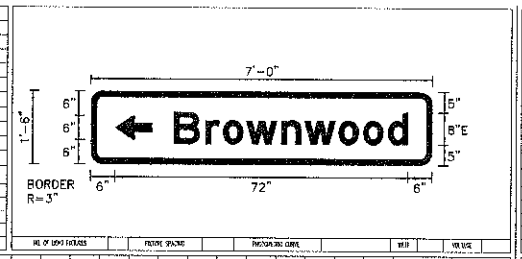

NO. OF LEGEND FIGURES	FIGURE SPACING	PROGRESSIVE CURVE	WIDTH	VOLTAGE

	B	r	o	w	n	w	o	o	d		L
COPY											
SPACE	20.4	28.2	32.5	38.2	46.8	52.6	60.9	67	73		57.6
COPY											
SPACE											
COPY											
SPACE											
COPY											
SPACE											
COPY											
SPACE											
COPY											
SPACE											

SIGN NAME	Brownwood	QTY	2	SIGN NUMBER	STATION(S)
PANEL		BORDER			none
WIDTH	7'-0"	WIDTH	0"		
HEIGHT	1'-6"	WIDTH	3"		
LEGEND	White	COLOR	White		
COLOR	Green				

SYMBOL(S)	ANGLE	X	Y	WD	HT
AR_Type D	270	68	6	6	9

SIGN NUMBER	NUMBER OF POSTS	DISTANCE Edge Of Lane	CROSSING SIZE			AVERAGE LENGTH

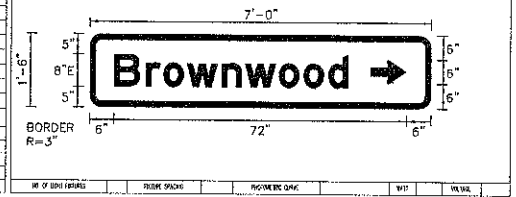

NO. OF LEGEND FIGURES	FIGURE SPACING	PROGRESSIVE CURVE	WIDTH	VOLTAGE

	B	r	o	w	n	w	o	o	d		L
COPY											
SPACE	6	13.8	18.1	23.8	32.4	38.2	45.5	52.6	58.6		57.6
COPY											
SPACE											
COPY											
SPACE											
COPY											
SPACE											
COPY											
SPACE											
COPY											
SPACE											

SIGN NAME	Brownwood	QTY	1	SIGN NUMBER	STATION(S)
PANEL		BORDER			none
WIDTH	7'-0"	WIDTH	0"		
HEIGHT	1'-6"	WIDTH	3"		
LEGEND	White	COLOR	White		
COLOR	Green				

SYMBOL(S)	ANGLE	X	Y	WD	HT
AR_Type D	0	7.5	4.5	6	9

SIGN NUMBER	NUMBER OF POSTS	DISTANCE Edge Of Lane	CROSSING SIZE			AVERAGE LENGTH

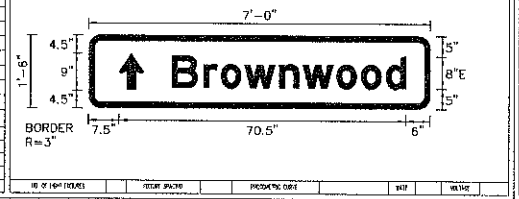

NO. OF LEGEND FIGURES	FIGURE SPACING	PROGRESSIVE CURVE	WIDTH	VOLTAGE

	B	r	o	w	n	w	o	o	d		L
COPY											
SPACE	20.4	28.2	32.5	38.2	46.8	52.6	60.9	67	73		57.6
COPY											
SPACE											
COPY											
SPACE											
COPY											
SPACE											
COPY											
SPACE											
COPY											
SPACE											

SIGN NAME		QTY		SIGN NUMBER	STATION(S)
PANEL		BORDER			
WIDTH		WIDTH			
HEIGHT		WIDTH			
LEGEND		COLOR			
COLOR					

SYMBOL(S)	ANGLE	X	Y	WD	HT

SIGN NUMBER	NUMBER OF POSTS	DISTANCE Edge Of Lane	CROSSING SIZE			AVERAGE LENGTH

NO. OF LEGEND FIGURES	FIGURE SPACING	PROGRESSIVE CURVE	WIDTH	VOLTAGE

COPY											
SPACE											
COPY											
SPACE											
COPY											
SPACE											
COPY											
SPACE											
COPY											
SPACE											
COPY											
SPACE											

REVISIONS		
DATE		BY

Kimley-Horn and Associates, Inc.
© 2012 KIMLEY-HORN AND ASSOCIATES, INC.
1612 E. TRUST ROAD, SUITE 100, TAMPA, FLORIDA 34611
Phone (813) 438-3000
CA No. 00000696

The Engineering Consortium

CR-466-A
BROWNWOOD

OVERHEAD STREET NAME SIGN WORKSHEET

DATE 09-24-12
DRAWN BY DSC
CHKD BY JDT

ENGINEER:
JONATHAN D. SNIDER, P.E. #57911
DATE:

SHT T-12 OF 12

Drawing name: K:\OCA_TPTD\2403\2012\2156- Sign Plan Updates\Brownwood\Cad\PlanSheets\Brownwood.dwg GANDE SIGN Sep 26, 2012 3:58pm by: dmr(Courtney)
The document, together with the concepts and designs presented herein, as an instrument of service, is intended only for the specific purpose and client for which it was prepared. Reuse of and improper reliance on this document without written authorization and adaptation by Kimley-Horn and Associates, Inc. shall be without liability to Kimley-Horn and Associates, Inc.

BONNIE
HEATH BLVD