ROOM FINISH SCHEDULE FBC T803.5

ROOM	FLOOR	BASE	WALLS	CEILINGS	HEIGHT	REMARKS
SANCTUARY	CARPET	WOOD	PAINTED DRYWALL	2X4 SUSPENDED	8'-0"	2X6 RAFTERS AT 24" oc
THRIFT STORE	WOOD	WOOD	PAINTED DRYWALL	2X4 SUSPENDED	VARIES	
REST ROOMS	V.C.TILE ON BACKER SUB FLOORING	VINYL	4" TILE/ DRYWALL 4" TILE WAINSCOTT	5/8" DRYWALL	8'-0"	

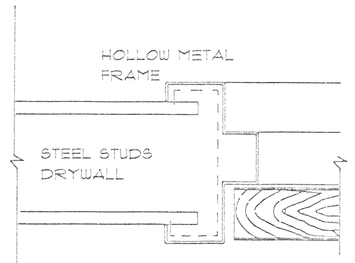

TYPICAL DOOR JAMB
INTERIOR RATED

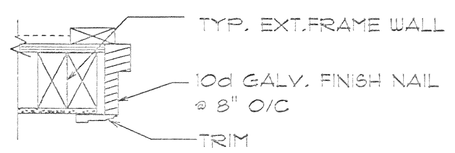

FRAME WALL EXT.DOOR JAMB

FBC T803.5
ALL INTERIOR WALL & CEILING FINISHES SHALL HAVE A MINIMUM RATING OF CLASS "C" ROOMS ; CLASS "B" CORRIDORS; CARPETING SHALL BE CLASS II

Design No. U412
Nonbearing Wall Rating 2 HR.

1. Floor and Ceiling Runner ▯ (Not Shown) ▯ 25 MSG (min) galv steel 1 in. high, return legs 1-5/8 in. wide (min), attached to floor and ceiling, with fasteners 24 in. OC.
2. Steel Studs ▯ 1-5/8 in. wide (min), 1-1/4 in. legs, 1/4 in. return formed of 25 MSG (min) galv steel max stud spacing 24 in. OC. Studs to be cut 3/4 in. less than assembly height.
3. Batts and Blankets ▯ (Optional) ▯ NOT USED

4. Gypsum Board ▯ 1/2 in. thick. Wallboard applied vertically in two layers. (Laminated System) Inner layer attached to studs with 1 in. long Type S steel screws spaced 24 in. O.C. along vertical edges and 24 in. O.C. in the field. Outer layer laminated to inner layer with joint compound, applied with a notched spreader producing continuous beads of compound about 3/8 in. in diameter, spaced not greater than 2 in. O.C. Joints of laminated outer layer offset 12 in. from inner layer joints.
Outer layer wallboard attached to inner layer with 1-1/2 in. long Type G steel screws spaced 24 in. O.C. along edges and center line of each sheet.
Optional, (Direct Attached System) Wallboard applied vertically in two layers. Inner layer attached to studs with 1 in. long Type S steel screws spaced 24 in. O.C. in the field and along the vertical edges. Outer layer attached to the studs over the inner layer with 1-5/8 in. long Type S steel screws spaced 12 in. O.C. in the field, along the vertical edges, and to the floor and ceiling runners. Joints of screw-attached outer layer offset from inner layer joints.
Optional, (Direct Attached System) Inner layer wallboard applied vertically. Outer layer wallboard applied horizontally. Inner layer attached to studs with 1 in. Type S steel screws spaced 24 in. O.C. along vertical edges and in the field. Outer layer attached to the studs over the inner layer with 1-5/8 in. long Type S steel screws spaced 12 in. OC in the field, along the vertical edges, and to the floor and ceiling runners. Outer layer secured to inner layer wallboard with 1-1/2 in. long Type G steel screws located midway between studs and 1 in. from the horizontal joins.
Outer layer wallboard joints covered with joint tape and min two coats of joint compound, and screw heads covered with min two coats of joint compound. As an alternate, non 3/32 in. thick gypsum veneer plaster may be applied to the entire surface of Classified veneer baseboard. Joints reinforced.

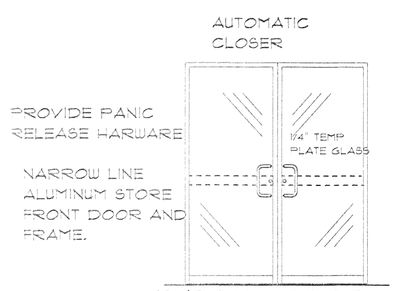

ENTRY DOOR
DOUBLE

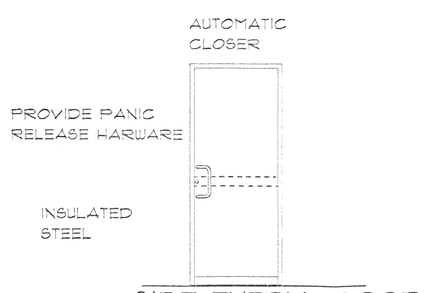

SIDE ENTRY DOOR
SINGLE

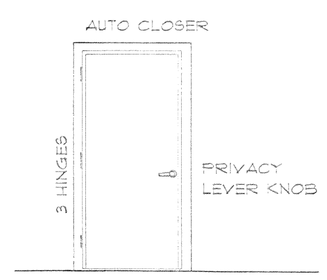

RESTROOM DOOR

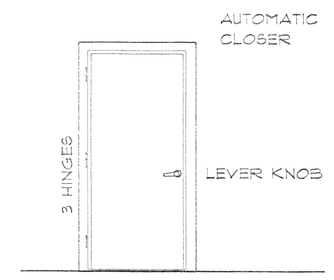

RATED DOOR

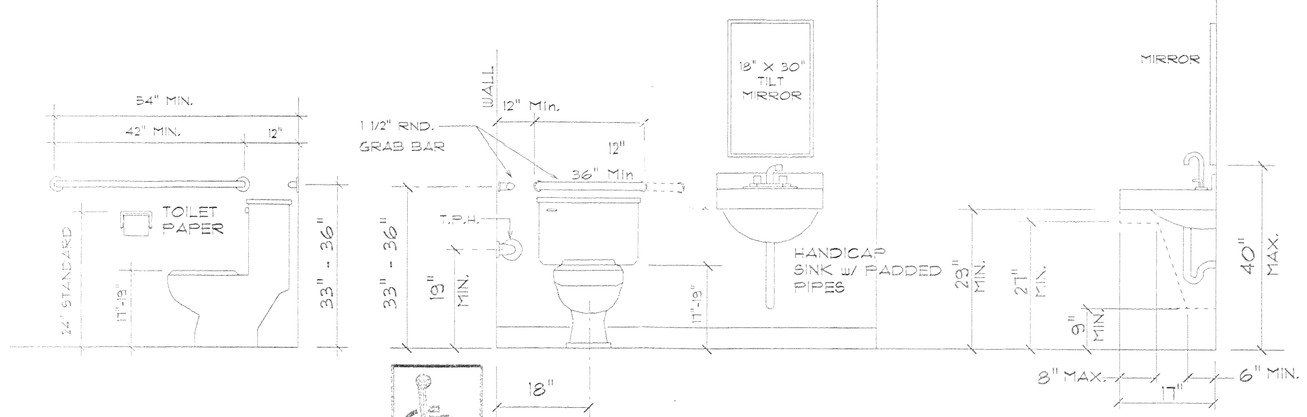

HANDICAP BATH DETAILS
1/2" = 1' - 0"

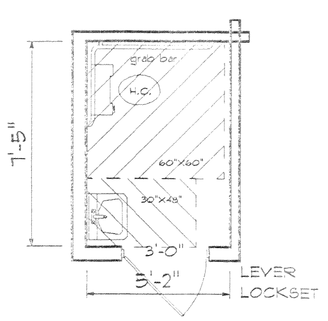

FIXTURE CLEARANCE
PER 2007 FBC CHAPTER 11 , FIGURE 30a
FOR NEW CONSTRUCTION

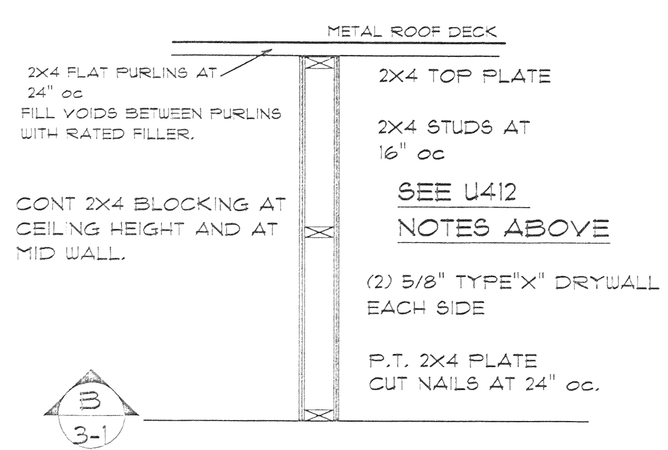

TYPICAL 2 Hr RATED FRAME PARTITION
FOR 1Hr RATED WALL APPLY
1 LAYER OF 5/8" TYPE "X"

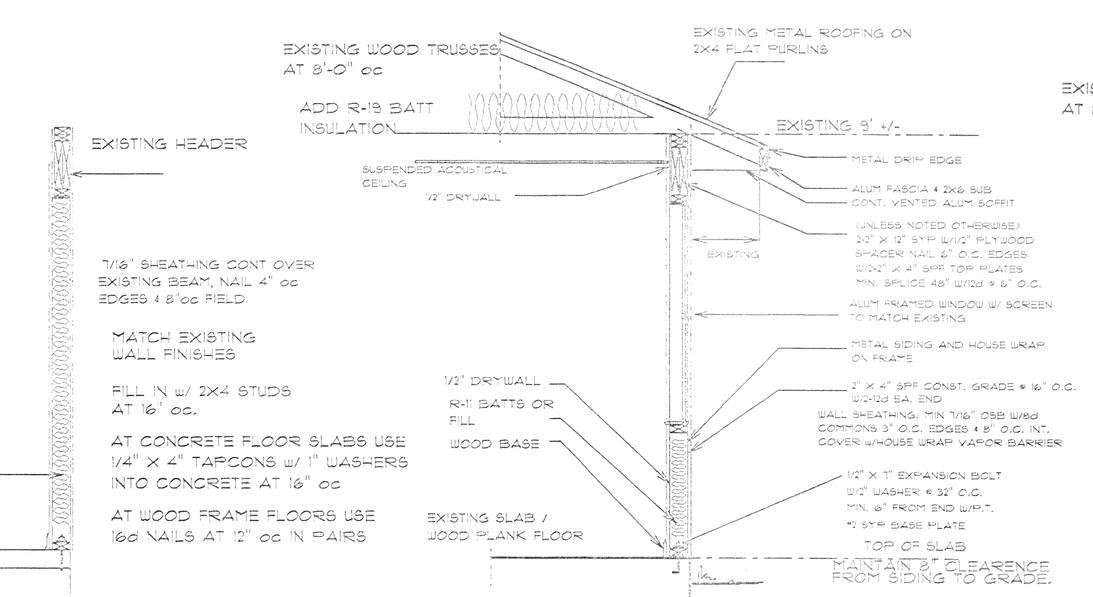

FRAMEWALL FILL IN
FILL IN UNDER EXIST BEAM

FILL IN WALL SECTION
SCALE 1/2" = 1'-0"

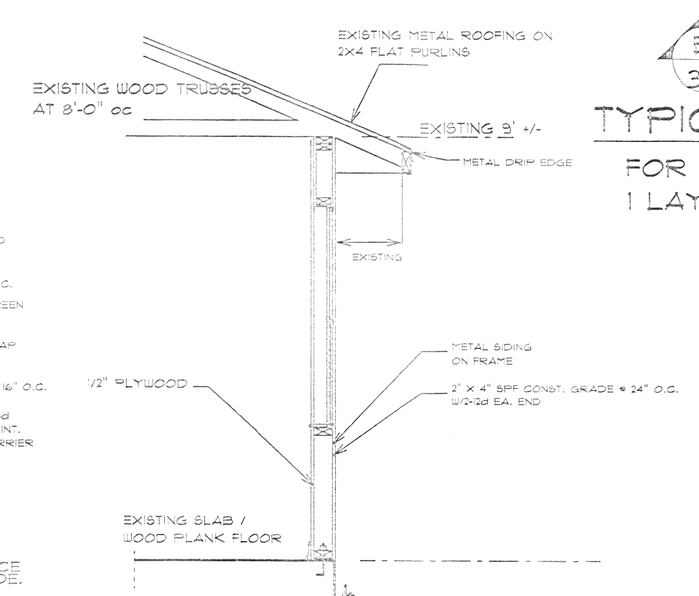

EXISTING WALL SECTION
EXTERIOR WALLS
SCALE 1/2" = 1'-0"

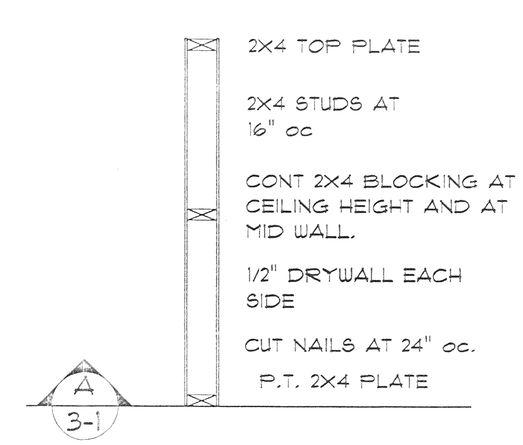

TYPICAL FRAME PARTITION

BUILDING INFORMATION

OCCUPANCY CLASSIFICATION MIXED
per FBC 303: A-3 and MERCHANTILE
BUILDING CONSTRUCTION FBC 602.3: TYPE- VB
SEPARATED CONSTRUCTION UNSPRINKLED
OCCUPANT LOAD FBC 1004.:
SANCTUARYAREA 1521sf/ 44 persons fixed seating
24 stage area (68) total
THRIFT STORE AREA 1,742sf / 60sf per person = 29

TOTAL OCCUPANT LOAD 112 PEOPLE

REST ROOM FACILITIES

RESTROOM FACILITIES ARE EXISTING AND LOCATED IN ORIGINAL ENTRY FOYER AREA.

CODES

2007 FLORIDA BUILDING CODE FOR BUILDING, w/ 2009 AMMENDMENTS
FULE GAS, MECHANICAL, AND PLUMBING.
2007 FLORIDA FIRE PREVENTION CODE
2005 NATIONAL ELECTRICAL CODE
LIFE SAFTEY CODE
BUILDING AND SITE COMPLY WITH FAIR HOUSING ACT
WINDLOAD DESIGN 110 mph

HARDWARE

LEVER TYPE FOR ACCESSIBILITY

THRESHOLDS

1/2" ALUM SADDLE

RESTROOMS

RESTROOM FACILITIES ARE HANDICAP ACCESIBLE SEE DETAILS.

WINDSPEED 110mph.
WIND IMPORTANCE FACTOR 1
EXPOSURE C
INTERNAL PRESSURE Cpi=(-)/+)
COMPONENT AND CLADDING = +23 / -25 p.s.f
Per 2007/2009 FBC TABLE 1609.6 B X 1.29

I HEREBY CERTIFY THAT I HAVE REVIEWED THE ATTACHED PLANS AND FOUND IT TO BE IN COMPLIANCE WITH 2007 FLORIDA BUILDING CODE/RESIDENTIAL, w/ 2009 AMENDMENTS.

louis c. george A.I.A. #3250
909-A W. MAGNOLIA St.
LEESBURG, FL 34748

DRAWINGS

SHEET 1 COVER SHEET
GENERAL INFORMATION
SHEET 2 EXISTING FLOOR PLAN
SHEET 3 FLOOR PLAN
SHEET 4 ELEVATIONS
SHEET 5 CEILING PLAN

ARCHITECT
louis c. george AIA
909-A W. MAGNOLIA St. LEESBURG, FLORIDA 34748

REMODEL EXISTING BUILDING FOR FOR NEW FACILITIES
the LIGHTHOUSE
SOUTH U.S. Hwy 471 WEBSTER, FLORIDA

SEAL #3250

October 03, 2009
DRWN BY: bld
JOB NO.
SHEET
A-1
OF