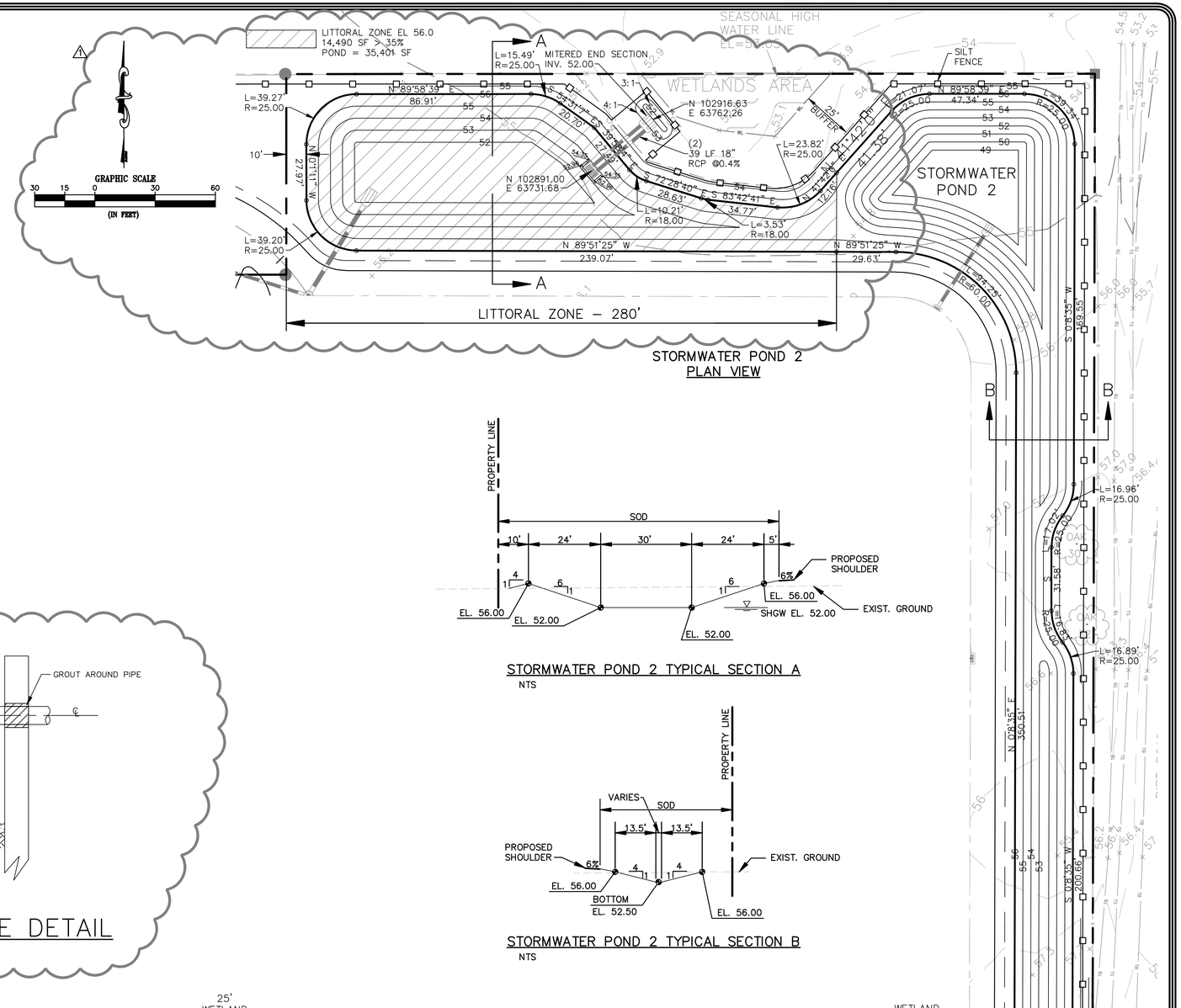

STORMWATER POND 2
PLAN VIEW

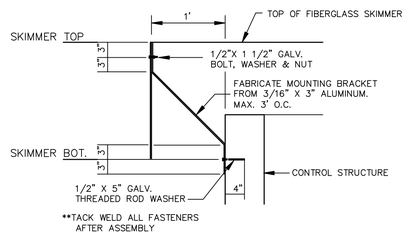

SKIMMER MOUNTING BRACKET
N.T.S.

STORMWATER POND 2 TYPICAL SECTION A
NTS

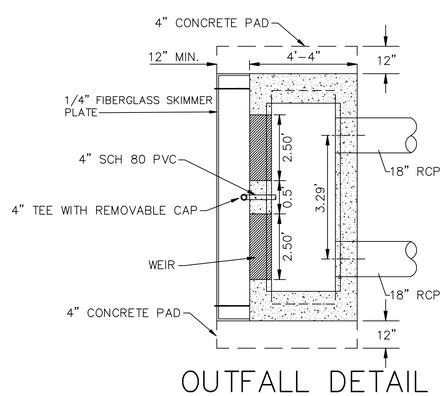

OUTFALL DETAIL
PLAN VIEW

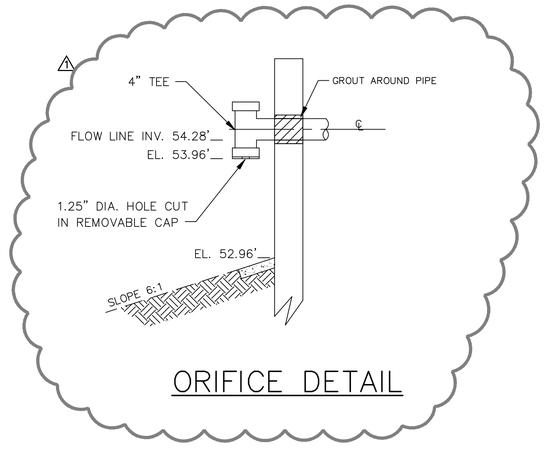

ORIFICE DETAIL

STORMWATER POND 2 TYPICAL SECTION B
NTS

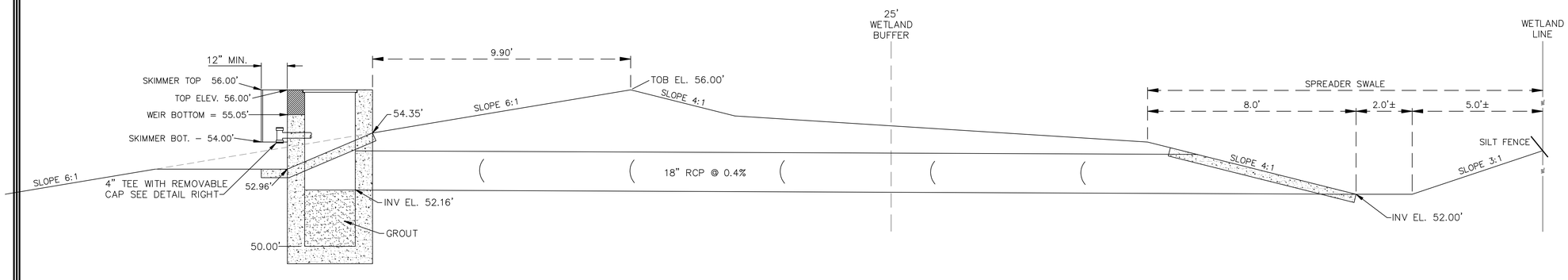

OUTFALL STRUCTURE POND 2
(MOD. "H" INLET)
N.T.S.

DANIEL J. HAYES, P.E. FL. REG. NO.
DATE: 48895

Wicks Consulting Services, Inc.
225 West Main Street, Tavares, Florida 32778
www.wicksconsulting.com (352) 343-8867
C.A. #00004571

Frank B. Arenas, Esq.
P.O. Box 600
Coleman, Florida 33521
(352) 748-6629

Engineering Plan of
FREE FLIGHT AIRPORT
DRAINAGE DETAILS
Sumter County, Florida 33521

REVISION:	DATE:
1 COUNTY/NMD COMMENTS	1-13-10

Drawn: WSR
Checked: DJH
Date: 06-10-09
Scale: AS SHOWN
File No.: 09110
Sheet: 10 of 11

S:\09110\FREE FLIGHT AIRPORT\plans\09110 total.dwg, 1/14/2010 8:41:45 AM, DWG To PDF.pc3