BOARD OF SUMTER COUNTY COMMISSIONERS

Chairman - Steve Printz - District 5
Vice Chairman - Garry Breeden - District 4
2nd Vice Chairman - Al Butler - District 1
Doug Gilpin - District 2
Don Burgess - District 3

May 12, 2020
5:00 PM

PLEASE TURN OFF ALL CELL PHONES AND ELECTRONIC DEVICES
ANY PERSON WHO MAY FEEL THE NEED TO APPEAL A BOARD DECISION IS HEREBY NOTIFIED THAT IT WILL BE NECESSARY FOR YOU TO PROVIDE YOUR OWN VERBATIM RECORDING OF THE BOARDS MINUTES OR ANY PORTION THEREOF

Any person requiring reasonable accommodation at this meeting because of a disability or physical impairment should contact the County Administrator's Office, 7375 Powell Road, Wildwood, FL 34785 (352) 689-4400 at least two days before the meeting.

Everglades Regional Recreation Center (5497 Marsh Bend Trail, Grand Canyon Room, The Villages, FL 32163)

AGENDA

MEETING IS CALLED TO ORDER BY THE CHAIRMAN
INVOCATION
FLAG SALUTE

1. TIMED ITEMS & PUBLIC HEARINGS

   a. 5:00 PM - Hold a Public Hearing to Consider Local Amendment to Chapter Six of the Building Code as Proposed New Section 177 "Two-Way Radio Communication Enhancement Systems" (Staff Recommends Approval).

      Documents:

      Executive Summary - Amend Chapter Six of Building Code.pdf
      Ordinance Revision - Building Code Public Safety Radio.pdf

   b. 5:30 PM - Public Hearing Planning and Zoning Special Master Recommendations *Quasi Judicial

      1. * CP2020-0001: Conduct the Second and Final Required Public Hearing Amending the Future Land Use Map of the Sumter County Unified Comprehensive Plan by Reassigning 24.0 acres +/- from Agricultural to Commercial (Staff Recommends Approval).

         Documents:

         ES CP2020-0001 Adopt.docx.pdf
         CP2020-0001 _ Wildwood Village RV Park - staff report.pdf

PZSM order for CP2020-0001.pdf
DEO Florida Department of Economic Opportunity Letter.pdf

2. * R2020-0002: Conduct Public Hearing to Consider Rezoning Approximately 34.4 acres Near SR 44 and I-75 from A10C to RVPUD (Staff Recommends Approval).

   Documents:

   ES R2020-0002.pdf
   Resolution R2020-0002- AAMW.pdf
   R2020-0002 _ Wildwood Village RV Park - staff report2.pdf
   CP2020-0001 R2020-0002 Application.pdf
   R2020-0002 Master Plan.pdf
   PZSM Order R2020-0002.pdf

3. * R2020-0009– Robbie Shoemaker for Crowder – Rezone 10 Acres MOL From A10C (Agricultural – Ten Acre Lot Size) to RR5C (Rural Residential – Five Acre Lot Size)– CR 227/ Wildwood Area (Planning and Zoning Special Master Recommends Approval).

   Documents:

   ES R2020-0009 Crowder.pdf
   Resolution R2020-0009- Crowder.pdf
   Crowder PZSM Order.pdf
   R2020-0009-Crowder - staff report-Revised.pdf

4. * R2020-0010– Archie Ellwood for AEllwood, LLC – Rezone 0.9 Acres MOL from R2C (Residential – 1/2 -Acre Minimum Lot Size, Conventional Housing) to R2M (Residential-1/2 Acre Minimum Lot Size, Allowing For Mobile Homes) – CR 647C/ Nobleton Area (Planning and Zoning Special Master Recommends Approval).

   Documents:

   ES R2020-0010 Ellwood.pdf
   Resolution R2020-0010- Ellwood.pdf
   Ellwood PZSM Order.pdf
   R2020-0010 Ellwood Application_ADA.pdf
   R2020-0010 -Ellwood Staff report_ADA.pdf

5. * S2020-0001– James Gough for Tommy's Hauling – Renew and Modifying a Major Special Use Permit For a Sand Excavation and Hauling Business– CR 526/ Sumterville Area (Planning and Zoning Special Master Recommends Approval with Conditions).

   Documents:

   ES S2020-0001 Tommys Hauling.pdf
   Gough PZSM Order.pdf
   S2020-0001 Tommys Hauling Application_ADA.pdf
   S2020-0001 -PZSM Packet_ADA.pdf

2. REPORTS AND INPUT

   a. Proclamation Recognizing May 17-23, 2020 as Emergency Medical Services (EMS) Week

      Documents:

EMS_Week_Proclamation.pdf

b. Proclamation Recognizing May 17-23, 2020 as National Public Works Week

Documents:

Public_Works_Week_Proclamation.pdf

c. Proclamation Recognizing May as Drug Court Month

Documents:

Drug Court Month Proclamation May 2020.pdf

d. Proclamation Recognizing May as Motorcycle Safety Awareness Month

Documents:

Motorcycle_Safety_Month_Proclamation_May_2020.pdf

e. County Administrator

1. Audit Presentation and Audit Report - Sumter County FY 2019 (For Information Only)

Documents:

Audit Report - Sumter County FY 2019.pdf

2. FY 2019-2020 Quarter 2 Report from Department of Health (For Information Only)

Documents:

ES Dept of Health Contract Report FY 19-20 Q2.pdf
Dept of Health FY 2019-20 Q2 Report.pdf

3. COVID-19 Emergency Update (For Information Only)

f. County Attorney

g. Clerk of Circuit Court

1. Check Registers for March 2020 (For Information Only)

Documents:

March 2020 BOCC Check Registers.pdf

h. Board Members

i. Public Forum

3. NEW BUSINESS - ACTION REQUIRED

a. MINUTES

1. Minutes of Workshop Meeting Held on April 21, 2020 (Staff Recommends Approval).

Documents:

4-21-2020 Workshop Minutes.pdf

2. Minutes of Special Called Meeting Held on May 5, 2020 (Staff Recommends Approval).

   Documents:

   5-5-2020 Special Called Meeting Minutes.pdf

b. SET FUTURE PUBLIC HEARINGS OR MEETINGS
   None

c. APPOINTMENTS

1. Affordable Housing Advisory Committee (AHAC) Vacancy (Board's Option).

   Documents:

   Executive_Summary_Affordable_Housing_Advisory_Committee_(AHAC).pdf
   Ordinance - Housing.pdf

2. Construction Industry Licensing/Fire Code Board of Appeals Vacancy (Board's Option).

   Documents:

   Executive_Summary_Construction.pdf
   Ordinance.pdf

3. Sumter County Public Library Advisory Board (SCPLAB) Vacancy (Board's Option).

   Documents:

   Executive_Summary_Library Advisory Board.pdf
   Resolution.pdf

4. Sumter County Tourist Development Council (TDC) Vacancy (Board's Option).

   Documents:

   Executive_Summary_Tourist .pdf
   Ordinance - Tourist development tax.pdf

5. Public Safety Coordinating Council Vacancies (Board's Option).

   Documents:

   Executive_Summary_Public Safety.pdf
   Resolution.pdf

d. FINANCIAL

1. Budget Amendment A-17(FY 2019-2020) Adjust Road Projects Accounts to Actual Expenses in the Secondary Trust Fund (Staff Recommends Approval).

   Documents:

   Executive Summary A-17.pdf

2. Purchase Order Approval for FY 2019/2020 (Staff Recommends Approval).

   Documents:

   Executive_Summary_Requisition_Report_5.12.20.pdf

3. Inventory Transactions – Disposal and Surplus of Property (Staff Recommends Approval).

   Documents:

   Executive_Summary 5.12.20.pdf

e. CONTRACTS AND AGREEMENTS

1. Award and Enter into Contract with Mark A. Weber Plumbing, Inc. for ITB 016-0-2020/RS Sumter County Boiler Replacement Project (Staff Recommends Approval).

   Documents:

   Executive_Summary_Boiler_Replacement.pdf
   Mark_Weber_Boiler_Submittal.pdf
   Boiler_Replacement_Agreement.pdf

2. Approval of the Deed and Right-of-Way Transfer for Parcel 101 to the Florida Department of Transportation (FDOT) for the SR 50 Widening Project (FDOT Project No. 435859-3) (Staff Recommends Approval).

   Documents:

   ES FDOT 4358593 SR 50 Parcel 101 Transfer rev.pdf
   Documents and Owner Notice P 101 revised.pdf

3. Approval of the Perpetual Easement for Parcel 803 to the Florida Department of Transportation (FDOT) for the SR 50 Widening Project (FDOT Project No. 435859-3) (Staff Recommends Approval).

   Documents:

   ES FDOT 4358593 SR 50 Parcel 803 Perpetual Easement Rev.pdf
   Documents and Owner Notice P 803 revised.pdf

4. Local Agency Program Supplemental Agreement Between State of Florida Department of Transportation (FDOT) and Sumter County Board of County Commissioners for the Construction and Construction Engineering Inspection (CEI) Services for Safety Improvements Along C-478 From US 301 to the City of Center Hill Southern Limit (Staff Recommends Approval).

   Documents:

   Executive_ Summary_LAP Agreement.pdf
   439912-1-58(68)-01 (G1J17) - SA 1 (revised) - CR 478.pdf

5. Renewal of Contract with Vector Disease Control International, LLC aka Mosquito Control Services of Florida, LLC for Sumter County Mosquito Control Services (Staff Recommends Approval).

   Documents:

   Vector_Disease_Control_ES.pdf
   Vector_Disease_Control_Agreement_Extension.pdf
   Renewal_Clay_County.pdf

6. Renewal of Sumter County Disaster Debris Hauling Services Agreement with Ceres Environmental Services, Inc. (Staff Recommends Approval).

   Documents:

   Ceres_Environmenal_ES.pdf
   Ceres_Environmental_Agreement_Extension.pdf

7. Renewal of Sumter County Disaster Debris Monitoring Services Agreement with Rostan Solutions, LLC (Staff Recommends Approval).

   Documents:

   Rostan_Solutions_ES.pdf
   Rostan_Solutions_Agreement_Extension.pdf

8. State-Funded Grant Agreement Between State of Florida Department of Transportation (FDOT) and Sumter County Board of County Commissioners for the Construction and Construction Engineering Inspection (CEI) Services for The Sumter County Advanced Traffic Management System (ATMS) Phase Project (Staff Recommends Approval).

   Documents:

   Executive_Summary_State Funded Grant Agreement.pdf
   436365-1-54-01 SFGA -Sumter- Construction ATMS Phase.pdf

9. Sumter County C-478 Widening Project from US 301 to SR 471 Asphalt and Geotechnical Inspection Services with Central Testing Laboratory (Staff Recommends Approval).

   Documents:

   Executive_Summary_CTL.pdf
   CTL, C 478 Proposal.pdf

10. Task 38 With Kimley-Horn and Associates, Inc., Task #1 Will Provide Design Plans and Permits for a 300' +/- Water Line Extension With a New Fire Hydrant for the Animal Services Project. Task #2 the Engineer Will Provide As-Needed Professional Construction Phase Services for the Animal Services Project (Staff Recommends Approval).

    Documents:

    ES_Kimley_Horn Animal Services Task 1and 2.pdf
    Task Order 38_Animal Control Building_Engineering Services.pdf

11. Approval of the Maintenance Memorandum of Agreement (MMOA) for the On-System Multi-Use Trail Project with the Florida Department of Transportation (FDOT) for the SR 50 Widening Project from East of C 478A to the Lake County Line (FDOT Project No. 435859-4) (Staff Recommends Approval).

    Documents:

    ES FDOT 4358593 SR 50 MMOA Trail 478A to Lake Line Rev.pdf
    435859-4 Sumter Co. On-System Trail MMOA revised.pdf
    RES 2020 Maintenance Memo Trail 478 A to Lake Line.pdf

12. Approval of the Maintenance Memorandum of Agreement (MMOA) for the On-System Multi-Use Trail Project with the Florida Department of Transportation (FDOT) for the SR 50 Widening Project from Hernando County Line to East of C 478A (FDOT Project No. 435859-3) (Staff Recommends Approval).

    Documents:

    ES FDOT 4358593 SR 50 MMOA Trail Hernando to 478A Rev.pdf
    435859-3 Sumter Co. On-System Trail MMOA revised.pdf
    RES 2020 Maintenance Memo Trail Hernando Line to 478 A.pdf

13. Memorandum of Agreement for Architectural Services Between Sumter County Board of County Commissioners and City of Webster, Florida (Staff Recommends Approval).

    Documents:

    Executive_Summary_Memorandum of Architectural Services.pdf
    MOA with City of Webster - architectural services (002).pdf

f. GENERAL ITEMS FOR CONSIDERATION

1. Affordable Housing (AH) Program Request to Execute a Partial Release of Mortgage for John and Valerie Elison (Staff Recommends Approval).

    Documents:

    Executive_Summary.pdf
    Partial_Release_of_Mortgage.pdf

2. Satisfaction of Civil Restitution Lien for Cymande Kharriem Jacobs Adewusi (Staff Recommends Approval).

    Documents:

    Satisfaction of Civil Restitution Lien for Cymande Kharriem Jacobs Adewusi.pdf

3. Satisfaction of Civil Restitution Lien for Debra Leonard Hunt (Staff Recommends Approval).

    Documents:

    Satisfaction of Civil Restitution Lien for Debra Leonard Hunt.pdf

4. Satisfaction of Civil Restitution Lien for James Nicholas Vassaur (Staff Recommends Approval).

Documents:

Satisfaction of Civil Restitution Lien for James Nicholas Vassaur..pdf

5. State Housing Initiatives Partnership (SHIP) Request to Approve the Technical Revision to the Local Housing Assistance Plan (LHAP) for State FY 2019/2020, 2020/2021, 2021/2022 (Staff Recommends Approval).

   Documents:

   Executive_Summary.pdf
   LHAP_Revision.pdf

6. State of Emergency Declaration Extension Sumter County Board of County Commissioners (Staff Recommends Approval).

   Documents:

   State of Emergency Declaration Extension 20200512.pdf

SUMTER COUNTY BOARD OF COUNTY COMMISSIONERS
EXECUTIVE SUMMARY

SUBJECT: Hold a Public Hearing to Consider Local Amendment to Chapter Six of the building code as proposed new section 177 "Two-Way Radio Communication Enhancement Systems" (Staff Recommends Approval).

REQUESTED ACTION: **Staff Recommends Approval**

Meeting Type: Select Meeting Type **DATE OF MEETING:** **5/12/2020**

CONTRACT: ☐ N/A Vendor/Entity:
Effective Date: Termination Date:
Managing Division / Dept: Choose a division or department.

BUDGET IMPACT: N/A
FUNDING SOURCE:
Type: N/A **EXPENDITURE ACCOUNT:**

HISTORY/FACTS/ISSUES:

Sumter County operates a county-wide Public Safety Radio System that serves all law enforcement, fire, and emergency medical services personnel. Bi-directional amplifiers and signal boosters are used to solve coverage problems in impenetrable areas such as buildings, tunnels, parking garages, and underground areas. Sumter County has developed a local amendment to Chapter Six of the building code to establish county-wide requirements for two-way radio communication enhancement systems and to lessen the possibility of two-way communication enhancement public safety booster systems from impacting the County's public safety radio system.

Prepared by: **Stephen J Kennedy, Sr** **Grammarly Check** ☒

SUMTER COUNTY ORDINANCE 2020-___

AN ORDINANCE OF SUMTER COUNTY, FLORIDA AMENDING CHAPTER 6 OF THE SUMTER COUNTY CODE, ENTITLED "BUILDINGS AND BUILDING REGULATIONS"; ADDING SECTION 117, ENTITLED "TWO-WAY RADIO COMMUNICATION SYSTEM"; PROVIDING FOR CODIFICATION; PROVIDING FOR CONFLICTS AND SEVERABILITY AND PROVIDING FOR AN EFFECTIVE DATE.

WHEREAS, the Board of County Commissioners of Sumter County ("Board") has adopted the Sumter County Code of Ordinances, which serve as the laws and regulations of Sumter County; and,

WHEREAS, the Sumter County Code of Ordinances has been amended from time to time, as necessary, to serve the need of the citizens of Sumter County, Florida; and,

WHEREAS, the Board operates a county-wide Public Safety Radio System that serves all law enforcement, fire, and emergency medical services personnel, and

WHEREAS, Board desires to adopt provisions to establish, implement and manage the "Two-Way Radio Communication Enhancement System," and

WHEREAS, Board determined that it is in the public interest to adopt the proposed provisions; and.

NOW, THEREFORE, BE IT ORDAINED by the Sumter County Board of County Commissioners, as follows:

SECTION 1. PURPOSE

The purpose of this Ordinance is to add to the Sumter County Code of Ordinances: Chapter 6 – *Buildings and Building Regulations*, Section 117 entitled *Two-way Radio Communication System.*

SECTION 2. AUTHORITY

Pursuant to Article III, Section I of the Florida Constitution and Sections 125.01 and 125.66 of the Florida Statutes, the Sumter County Board of County Commissioners has all powers of local self-government to perform county functions and render county services and facilities except which prohibited by law, including the authority to amend its Code of Ordinances.

SECTION 3. CHAPTER 6, BUILDINGS AND BUILDING REGULATIONS OF THE SUMTER COUNTY CODE OF ORDINANCES, ADDING SECTION 117.

The Sumter County Board of County Commissioners hereby amends Chapter 6 of the Sumter County Code of Ordinances, *Buildings and Building Regulations*, by adding Section 117 as follows:

Sec. 6-117. – Two-way Radio Communication Systems.

(a) The Authority Having Jurisdiction (AHJ) shall determine if a new building or existing building shall require that a two-way radio communication enhanced public safety signal booster system be installed to comply with the Florida Fire Prevention Code 11.10.1 and Florida Statutes 633.202.18,

(b) Critical building areas include fire command centers, fire pump rooms, exit stairs, exit passageways, elevator lobbies, standpipe cabinets, and sprinkler sectional valve locations

(c) Delivered Audio Quality (DAQ) Metrics are defined as:

DAQ 1 Unusable. Speech is present, but not understandable

DAQ 2 Speech is understandable with considerable effort. Requires frequent repetition due to noise/distortion

DAQ 3 Speech is understandable with slight effort. Some noise/distortion present.

DAQ 3.4 Speech is understandable without repetition. Some noise/distortion present.

DAQ 4 Speech is easily understood. Occasional noise/distortion present

(d) All new buildings shall provide the following minimum radio standards for critical building areas – 99% coverage at a minimum of DAQ 3.4 and general building areas – 90% coverage at a minimum of DAQ 3.0

(e) In buildings that cause reduction of public safety radio signals below the acceptable level for reliable communications, corrective action will be required to assure radio system coverage reliability is retained. Sumter County shall coordinate work to resolve the matter through improvements to the public safety radio system or the installation of a bi-directional amplifier (BDA). If Board elects to install a BDA, the owner shall grant access to the facility for the installation of the BDA by Board.

SECTION 4. CODIFICATION

It is the intention of the Sumter County Board of County Commissioners, and it is hereby ordained that the provisions of this ordinance shall become and be made a part of the Code of Ordinances of Sumter County, Florida. The word "Ordinance," or similar words may be changed to "Section," "Article," or another appropriate word or phrase and the sections of this Ordinance may be renumbered or re-lettered to accomplish such intention. The Code codifier is granted liberal authority to rescind those sections of the Code declared null and void as set forth herein.

SECTION 5. CONFLICTS AND REPEALER

This Ordinance shall be cumulative of all provisions of the Ordinances of Sumter County, Florida, except where the provisions of the Ordinance are in direct conflict with the provisions of

such Ordinances, in which event all Ordinances or parts thereof in conflict with this Ordinance are hereby repealed to the extent of such conflict.

SECTION 6. SEVERABILITY

If any section, subsection, sentence, phrase or portion of this Ordinance, or application hereof, is for any reason held invalid or unconstitutional by any court of competent jurisdiction, such portion or application shall be deemed a separate, distinct, and independent provision and such holding shall not affect the validity of the remaining portions hereof.

SECTION 7. EFFECTIVE DATE

Once adopted by the Sumter County Board of County Commissioners, this Ordinance shall become effective immediately

DONE AND ORDAINED this _____ day of _____ 2020, in regular session by the Sumter County Board of County Commissioners in The Villages, Florida.

ATTEST:	GLORIA HAYWARD CLERK OF CIRCUIT COURT	SUMTER COUNTY BOARD OF COUNTY COMMISSIONERS
	_____	_____
	Caroline AlRestimawi, Deputy Clerk	Steve Printz, Chairman

(SEAL)

SUMTER COUNTY BOARD OF COUNTY COMMISSIONERS
EXECUTIVE SUMMARY

SUBJECT: ***CP2020-0001: Conduct the Second and Final Required Public Hearing Amending the Future Land Use Map of the Sumter County Unified Comprehensive Plan by Reassigning 24.0 acres +/- from Agricultural to Commercial.**

REQUESTED ACTION: **Staff Recommends Approval**

Meeting Type: Regular Meeting **DATE OF MEETING:** **5/12/2020**

CONTRACT: ☒ N/A Vendor/Entity:
Effective Date: Termination Date:
Managing Division / Dept: **Building & Code / Development Services**

BUDGET IMPACT:
FUNDING SOURCE:

Type: Select impact type **EXPENDITURE ACCOUNT:**

HISTORY/FACTS/ISSUES:

This amendment proposes a revision to Map 1-1 of the Future Land Use Element of the Unified Comprehensive Plan by reassigning 24.0 acres +/- from Agricultural to Commercial. This amendment will allow the owner to expand an existing Recreational Vehicle Planned Unit Development.

The requested amendment has been reviewed by the Florida Department of Economic Opportunity and other reviewing agencies and no objections were lodged.

The Planning & Zoning Special Master held a public hearing on February 3, 2020 and recommended approval.

Prepared by: **Karl Holley** **Grammarly Check** ☒

Sumter County Planning and Zoning Special Master
February 3, 2020

Board of Sumter County Commissioners
February 11, 2020

CASE NO.:	CP2020-0001
APPLICANT:	AAMW Enterprises, Inc**.**
REPRESENTATIVE:	Michael P. Wood
REQUESTED ACTION:	Change Future Land Use on 24.0 acres MOL from Agriculture to Commercial.
PARCEL NUMBERS:	C34A174 and C35A003
LEGAL DESCRIPTION:	Attached
EXISTING ZONING:	A10C
EXISTING USE:	Vacant
FUTURE LAND USE:	Commercial, Agricultural
PARCEL SIZE:	33.40 acres
GENERAL LOCATION:	I-75, SR 44
COMMISSIONER DISTRICT:	2

SURROUNDING LAND USE:		**SURROUNDING ZONING:**	
NORTH:	Agriculture	**NORTH:**	RR5C
SOUTH:	Commercial	**SOUTH:**	RVPUD
EAST:	Agriculture	**EAST:**	A10C
WEST:	Commercial	**WEST:**	CL

CASE SUMMARY:

The applicant desires to change the Future Land Use Designation on approximately 24 acres from Agriculture to Commercial. The subject parcels are approximately 34.4 acres and both have Commercial and Agriculture Future Land Uses. This request is associated with Case R2020-0002 which requests rezoning to RVPUD for the expansion of an existing recreational vehicle park.

CASE ANALYSIS:

The subject property consists of two parcels, one on each side of CR 229. These parcels currently have Future Land Use Designations divided between Commercial and Agricultural along an awkward diagonal line that splits the two rectangular parcels. The applicant owns and operates the Wildwood RV Village immediately to the south of the subject properties. The subject properties are both located within the Urban Expansion area as defined by the Sumter County Unified Comprehensive Plan, as well as the Primary Economic Activity Center. The proposed amendment will provide the same Future Land Use Classification for the entirety of the two parcels involved.

The request is consistent with Policy 1.3.7, Conversion of Agricultural Lands, which reads as follows:

"Conversion of agricultural lands to a mixed use, industrial, commercial or residential future land use category shall demonstrate the following:

a. The amendment will not result in urban sprawl as defined in Chapter 163, Part II, Florida Statutes;

b. Availability of public infrastructure, including public water and sewer, to serve a more dense or intense use, or will be available at the time of development and is secured under a Developers Agreement."

The request also comports with Policy 1.2.8 that provides that "The Commercial future land use category is applied to land suitable for commercial activity with access from an arterial or collector road." The project can be directly accessed from SR 44.

DEVELOPMENT SERVICES DIVISION STAFF CONCLUSIONS:

The staff recommends approval of the application.

Notices Sent: _22 ____ (In objection) 0 _ _____ (In favor) 0 ____ __

Planning and Zoning Special Master Recommendation: _Approval_____

Board of County Commissioners:_____ _____

CP2020-0001
Location Map

CP2020-0001
Current Land Use

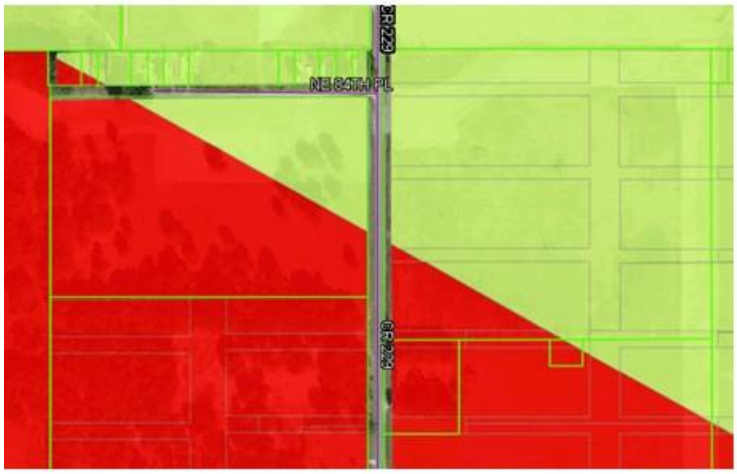

CP2020-0001
Proposed Land Use

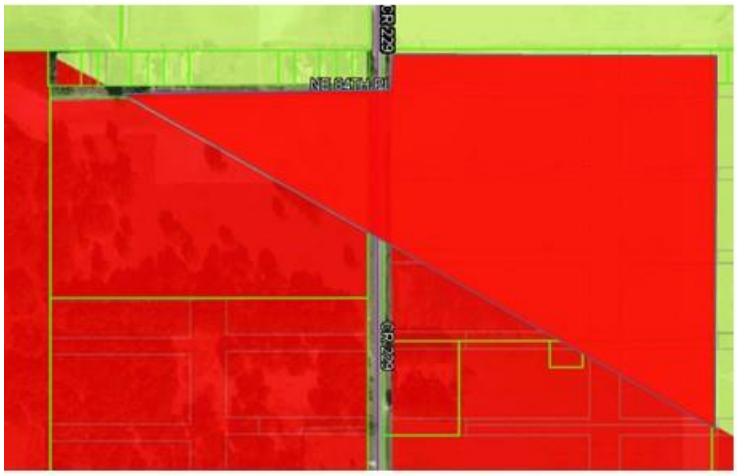

- Agriculture
- Conservation
- Recreation
- Commercial
- Industrial
- Public/ Insitutional
- Municipality
- Mixed Use
- High Density Residential
- Urban Residential
- Rural Residential

SUMTER COUNTY
SPECIAL MASTER PROCEEDING

CASE NO.	CP 2020-0001
APPLICANT:	AAMW Enterprises, Inc.
REQUESTED ACTION:	Change Future Land Use on 24.0 acres MOL from Agriculture to Commercial

RECOMMENDATION OF SPECIAL MASTER

On February 3, 2020, Applicant AAMW Enterprises, Inc., through representative Michael P. Wood, was present at the hearing before the Special Master requesting to change the Future Land Use on 24.0 acres MOL from Agriculture to Commercial. This request is associated with Case R2020-0002 which requests rezoning to RVPUD for the expansion of an existing recreational vehicle park. The subject properties are both located within the Urban Expansion area as defined by the Sumter County Unified Comprehensive Plan, as well as the Primary Economic Activity Center. The proposed amendment will provide the same Future Land Use Classification for the entirety of the two parcels involved

The only evidence presented at the hearing was the staff report, in which staff deemed the application sufficient and consisted with the Sumter County Comprehensive Plan and recommended approval. There was no public comment, and the Applicant did not provide further information.

Based upon the evidence presented at the hearing, the Special Master finds as follows:

1. The proposed amendment is suitable for the land use of the subject property.
2. The proposed amendment is consistent with the Comprehensive Plan.

Therefore, the Special Master recommends Application CP 2020-0001 for APPROVAL to the Board of County Commissioners at the commission meeting currently scheduled for February 11, 2020.

ORDERED this 3d day of February, 2020.

ZACHARY T. BROOME, ESQ.
Special Master
Florida Bar No. 91331

Ron DeSantis
GOVERNOR

Ken Lawson
EXECUTIVE DIRECTOR

RECEIVED
MAR 23 2020
BY:

March 20, 2020

The Honorable Steve Printz
Chairman, Board of County Commissioners
7375 Powell Road
Wildwood, Florida 34785

Dear Honorable Printz:

The Department of Economic Opportunity ("Department") has reviewed the proposed comprehensive plan amendment for Sumter County (Amendment No. 20-01ESR) received on March 3, 2020. The review was completed under the expedited state review process. We have no comment on the proposed amendment.

The County should act by choosing to adopt, adopt with changes, or not adopt the proposed amendment. For your assistance, we have enclosed the procedures for adoption and transmittal of the comprehensive plan amendment. In addition, the County is reminded that:

- Section 163.3184(3)(b), F.S., authorizes other reviewing agencies to provide comments directly to the County. **If the County receives reviewing agency comments and they are not resolved, these comments could form the basis for a challenge to the amendment after adoption**.

- **The second public hearing,** which shall be a hearing on whether to adopt one or more comprehensive plan amendments, **must be held within 180 days** of your receipt of agency comments or the amendment shall be **deemed withdrawn** unless extended by agreement with notice to the Department and any affected party that provided comment on the amendment pursuant to Section 163.3184(3)(c)1., F.S.

- **The adopted amendment must be rendered to the Department.** Under Section 163.3184(3)(c)2. and 4., F.S., the **amendment effective date** is 31 days after the Department notifies the County that the amendment package is complete or, if challenged, until it is found to be in compliance by the Department or the Administration Commission.

An equal opportunity employer/program. Auxiliary aids and service are available upon request to individuals with disabilities. All voice telephone numbers on this document may be reached by persons using TTY/TTD equipment via the Florida Relay Service at 711.

If you have any questions concerning this review, please contact Beau Scott, Planning Analyst, by telephone at (850) 717-8515 or by email at beau.scott@deo.myflorida.com.

Sincerely,

James D. Stansbury, Chief
Bureau of Community Planning and Growth

JDS/bs

Enclosure(s): Procedures for Adoption

cc: Karl Holley, AICP, Development Services Director, Sumter County
Hugh W. Harling, Jr., Executive Director, East Central Florida Planning Council

SUBMITTAL OF ADOPTED COMPREHENSIVE PLAN AMENDMENTS

FOR EXPEDITED STATE REVIEW

Section 163.3184(3), Florida Statutes

NUMBER OF COPIES TO BE SUBMITTED: Please submit three complete copies of all comprehensive plan materials, of which one complete paper copy and two complete electronic copies on CD ROM in Portable Document Format (PDF) to the State Land Planning Agency and one copy to each entity below that provided timely comments to the local government: the appropriate Regional Planning Council; Water Management District; Department of Transportation; Department of Environmental Protection; Department of State; the appropriate county (municipal amendments only); the Florida Fish and Wildlife Conservation Commission and the Department of Agriculture and Consumer Services (county plan amendments only); and the Department of Education (amendments relating to public schools); and for certain local governments, the appropriate military installation and any other local government or governmental agency that has filed a written request.

SUBMITTAL LETTER: Please include the following information in the cover letter transmitting the adopted amendment:

_____ State Land Planning Agency identification number for adopted amendment package;

_____ Summary description of the adoption package, including any amendments proposed but not adopted;

_____ Identify if concurrency has been rescinded and indicate for which public facilities. (Transportation, schools, recreation and open space).

_____ Ordinance number and adoption date;

_____ Certification that the adopted amendment(s) has been submitted to all parties that provided timely comments to the local government;

_____ Name, title, address, telephone, FAX number and e-mail address of local government contact;

_____ Letter signed by the chief elected official or the person designated by the local government.

ADOPTION AMENDMENT PACKAGE: Please include the following information in the amendment package:

_____ In the case of text amendments, changes should be shown in strike-through/underline format.

_____ In the case of future land use map amendments, an adopted future land use map, **in color format,** clearly depicting the parcel, its future land use designation, and its adopted designation.

_____ A copy of any data and analyses the local government deems appropriate.

Note: If the local government is relying on previously submitted data and analysis, no additional data and analysis is required;

_____ Copy of the executed ordinance adopting the comprehensive plan amendment(s);

Suggested effective date language for the adoption ordinance for expedited review:

> "The effective date of this plan amendment, if the amendment is not timely challenged, shall be 31 days after the state land planning agency notifies the local government that the plan amendment package is complete. If the amendment is timely challenged, this amendment shall become effective on the date the state land planning agency or the Administration Commission enters a final order determining this adopted amendment to be in compliance."

_____ List of additional changes made in the adopted amendment that the State Land Planning Agency did not previously review;

_____ List of findings of the local governing body, if any, that were not included in the ordinance and which provided the basis of the adoption or determination not to adopt the proposed amendment;

_____ Statement indicating the relationship of the additional changes not previously reviewed by the State Land Planning Agency in response to the comment letter from the State Land Planning Agency.

SUMTER COUNTY BOARD OF COUNTY COMMISSIONERS
EXECUTIVE SUMMARY

SUBJECT: ***R2020-0002: Conduct Public Hearing to Consider Rezoning Approximately 34.4 acres Near SR 44 and I-75 from A10C to RVPUD.**

REQUESTED ACTION: **Staff Recommends Approval**

Meeting Type: Regular Meeting **DATE OF MEETING:** **5/12/2020**

CONTRACT: ☒ N/A Vendor/Entity:
Effective Date: Termination Date:
Managing Division / Dept: **Building & Code / Development Services**

BUDGET IMPACT:
FUNDING SOURCE:

Type: Select impact type **EXPENDITURE ACCOUNT:**

HISTORY/FACTS/ISSUES:

The applicant requests rezoning of approximately 34.4 acres from A10C to RVPUD to provide for expansion of an existing Recreational Vehicle Park.

The Planning & Zoning Special Master held a public hearing on February 3, 2020 and recommended approval.

Prepared by: **Karl Holley** **Grammarly Check** ☒

RESOLUTION NUMBER _____

A RESOLUTION OF THE BOARD OF COUNTY COMMISSIONERS OF SUMTER COUNTY, FLORIDA, REZONING PROPERTY LOCATED WITHIN THE UNINCORPORATED LANDS OF THE COUNTY.

WHEREAS, the Board of County Commissioners of Sumter County received a complete and properly funded application for rezoning of property located within the unincorporated lands of Sumter County, and;

WHEREAS, after diligent review and consideration the above referenced rezoning was approved.

NOW, THEREFORE, BE IT RESOLVED by the Board of County Commissioners of Sumter County, Florida, as follows:

1. Based on competent substantial evidence presented and considered during a properly noticed quasi judicial hearing, the Board of County Commissioners of Sumter County hereby approves rezoning application R2020-0002 for property as described in the attachment. The land described in application R2020-0002 is hereby rezoned to RVPUD, as the zoning category is described in the Sumter County Land Development Code.

DONE AND RESOLVED THIS 12th DAY OF May, 2020,
at _____, Sumter County, Florida.

ATTEST: GLORIA HAYWARD
Clerk of Circuit Court

_____
Deputy Clerk

BOARD OF COUNTY COMMISSIONERS
OF SUMTER COUNTY, FLORIDA

_____
Steve Printz, Chairman

Attachment

ALL OF BLOCKS 24 25 26 & 27 LOTS 1-17 BLK 28 & LOTS 1-4 & 9-21 BLK 29 WEST WILDWOOD HEIGHTS UNIT 2 PB 2 PG 47 and LOTS 1-24 BLK 1 LOTS 1-12 BLK 2 LOTS 1-48 BLK.3 LOTS 1-16 & 41-48 BLK 4 LOTS 1-48 BLK 5 LOTS 1-16 & 41-48 BLK 6 LOTS 1-48 BLK 7 LOTS 1-16 & 41-48 BLK 8 WEST WILDWOOD HEIGHTS UNIT 1 PB 2 PG 32 AND THOSE PORTIONS OF HILLCREST AVE HOLLYWOOD AVE FAIRVIEW AVE GRAND CENTRAL BLVD MIAMI AVE AND PARKS DESC IN RD VACATION REC'D IN OR 3636 PB 636

Sumter County Planning and Zoning Special Master
February 3, 2020

Board of Sumter County Commissioners
February 11, 2020

CASE NO.:	CP2020-0001
APPLICANT:	AAMW Enterprises, Inc**.**
REPRESENTATIVE:	Michael P. Wood
REQUESTED ACTION:	Change Future Land Use on 24.0 acres MOL from Agriculture to Commercial.
PARCEL NUMBERS:	C34A174 and C35A003
LEGAL DESCRIPTION:	Attached
EXISTING ZONING:	A10C
EXISTING USE:	Vacant
FUTURE LAND USE:	Commercial, Agricultural
PARCEL SIZE:	33.40 acres
GENERAL LOCATION:	I-75, SR 44
COMMISSIONER DISTRICT:	2

SURROUNDING LAND USE:		**SURROUNDING ZONING:**	
NORTH:	Agriculture	**NORTH:**	RR5C
SOUTH:	Commercial	**SOUTH:**	RVPUD
EAST:	Agriculture	**EAST:**	A10C
WEST:	Commercial	**WEST:**	CL

CASE SUMMARY:

The applicant desires to change the Future Land Use Designation on approximately 24 acres from Agriculture to Commercial. The subject parcels are approximately 34.4 acres and both have Commercial and Agriculture Future Land Uses. This request is associated with Case R2020-0002 which requests rezoning to RVPUD for the expansion of an existing recreational vehicle park.

CASE ANALYSIS:

The subject property consists of two parcels, one on each side of CR 229. These parcels currently have Future Land Use Designations divided between Commercial and Agricultural along an awkward diagonal line that splits the two rectangular parcels. The applicant owns and operates the Wildwood RV Village immediately to the south of the subject properties. The subject properties are both located within the Urban Expansion area as defined by the Sumter County Unified Comprehensive Plan, as well as the Primary Economic Activity Center. The proposed amendment will provide the same Future Land Use Classification for the entirety of the two parcels involved.

The request is consistent with Policy 1.3.7, Conversion of Agricultural Lands, which reads as follows:

"Conversion of agricultural lands to a mixed use, industrial, commercial or residential future land use category shall demonstrate the following:

a. The amendment will not result in urban sprawl as defined in Chapter 163, Part II, Florida Statutes;

b. Availability of public infrastructure, including public water and sewer, to serve a more dense or intense use, or will be available at the time of development and is secured under a Developers Agreement."

The request also comports with Policy 1.2.8 that provides that "The Commercial future land use category is applied to land suitable for commercial activity with access from an arterial or collector road." The project can be directly accessed from SR 44.

DEVELOPMENT SERVICES DIVISION STAFF CONCLUSIONS:

The staff recommends approval of the application.

Notices Sent: _22 ____ (In objection) 0 _ _____ (In favor) 0 ____ __

Planning and Zoning Special Master Recommendation: _Approval_____

Board of County Commissioners:_____ _____

CP2020-0001
Location Map

CP2020-0001
Current Land Use

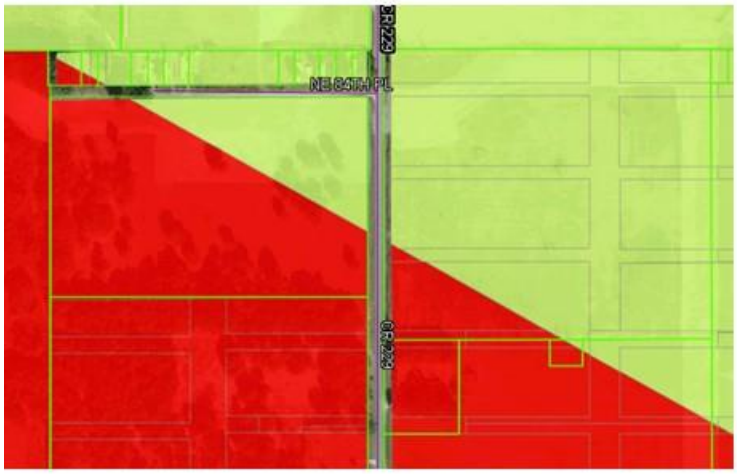

CP2020-0001
Proposed Land Use

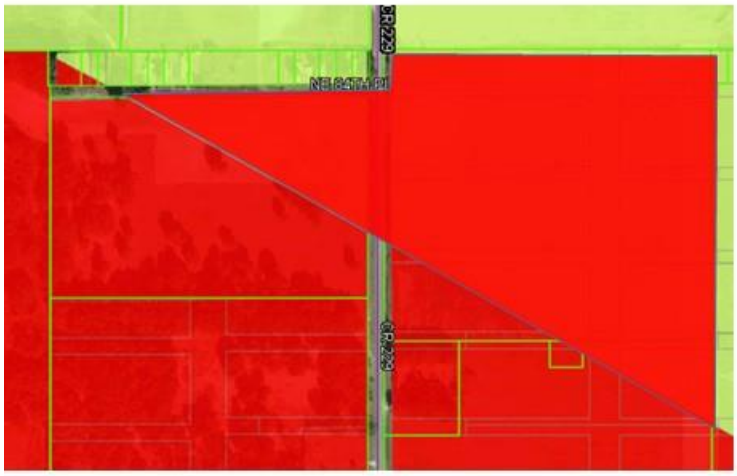

- Agriculture
- Conservation
- Recreation
- Commercial
- Industrial
- Public/ Insitutional
- Municipality
- Mixed Use
- High Density Residential
- Urban Residential
- Rural Residential

Board of County Commissioners

Development Services Department

Planning Services Division

7375 Powell Rd., Ste. 115, Wildwood, FL 34785 Phone (352) 689-4400 FAX: (352) 689-4401
Website: http://sumtercountyfl.gov

CP 2020-0001
Project # R2020-0002
Date Rec'd: Jan. 13, 2020
Planner: Karl Holley

ZSM Feb 3, 2020 6:00pm

BOCC Feb 11, 2020 5:30pm

LAND USE AMENDMENT
AND/OR REZONING APPLICATION

X **Rezoning**

____ **Land Use Amendment (<10 acres)**
X **Land Use Amendment (10 acres or more)**

Applicant Information:

Name of Property Owner(s): AAMW ENTERPRISES, LLC

Address: 882 EAST STATE RD 44
WILDWOOD, FL. 34785

Owner Phone: 813-312-4274 Email: mwood0068@gmail.com

Name of Agent: MICHAEL P. WOOD

Address: P.O. Box 1462
INVERNESS, FL 34451

Agent Phone: 813-312-4274 Email: mwood0068@gmail.com

Property Information:
Legal Description of the property (lengthy descriptions may be attached)

Street Address: 882 EAST STATE RD 44 WILDWOOD, FL 3478

Parcels # C34A174 & C35A003 **Current Use:**

Current Future Land Use: **Current Zoning:**

Requested Future Land Use_____ **Requested Zoning:**_____

Acreage requested: 13.5 + 20

Reason for the request: EXPAND EXISTING RV-PUD

Please Provide:

- ☑ **Deed or other proof of ownership**
- ☐ **Signed authorization if applicant is not the land owner**
- ☐ **Legal description of the area under application. (lengthy or complex legal descriptions may be required in digital/text format)**

All properties for which applications require public hearings before the PZSM or commission shall be posted by the applicant with plaques furnished by the director. Such plaques shall identify the application, the requested action, and the date, time and place of hearing. Plaques shall be sufficiently conspicuous in terms of size, location, and content to provide reasonably adequate notice to potentially interested persons of the matter that will appear on the authority's agenda. Such notices shall be posted at least seven (7) days prior to the first hearing at which the subject property will be considered, at locations specified by the director. (Sumter County Land Development Code Sec. 13-315(a)(2).

Under penalties of perjury, I declare the above information that I have given to be true and correct to the best of my knowledge and belief.

_____ 1-9-20

Signature **Date**

MICHAEL P. LOGOD

Print Name

A public hearing before the Zoning Special Master (ZSM) will be scheduled once the application is found to be complete. The hearing will be at 6 P.M. at 510 Colony Blvd., The Villages, FL. Your appearance or authorized representative is required at this hearing. Failure for you or your authorized representative's attendance will cause your application to be handled in accordance with the policy adopted in the Sumter County Land Development Code. Minor Special Use Permits are decided by the ZSM. Conditions of approval may be assigned to assure compatibility with the neighborhood. Hearings may be postponed by the ZSM at his/her discretion.

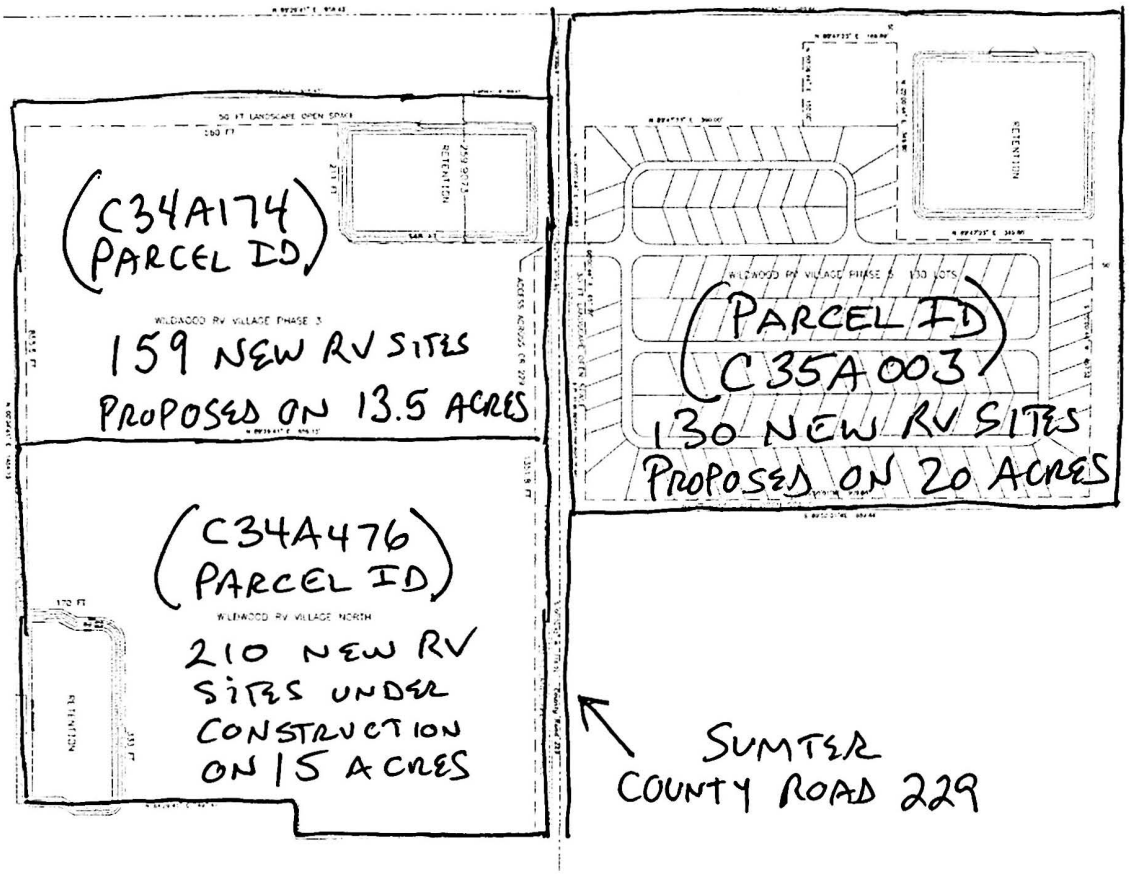

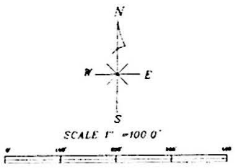

* TRAFFIC STUDY TO BE UPDATED WITH ADDITIONAL 289 NEW RV SITES ON 33.5 ACRES ON CR 229 IN SUMTER COUNTY.

OPEN SPACE

M-1	CLIENT: AAMW ENTERPRISES, LLC 882 STATE ROAD 44 WILDWOOD, FLORIDA 34785 813-312-4274	PROJECT: WILDWOOD RV VILLAGE 882 STATE ROAD 44 WILDWOOD, SUMTER COUNTY, FLORIDA	Design Services 4336 ST. LAWRENCE DRIVE NEW PORT RICHEY, FL. 34655 (727)372-0566

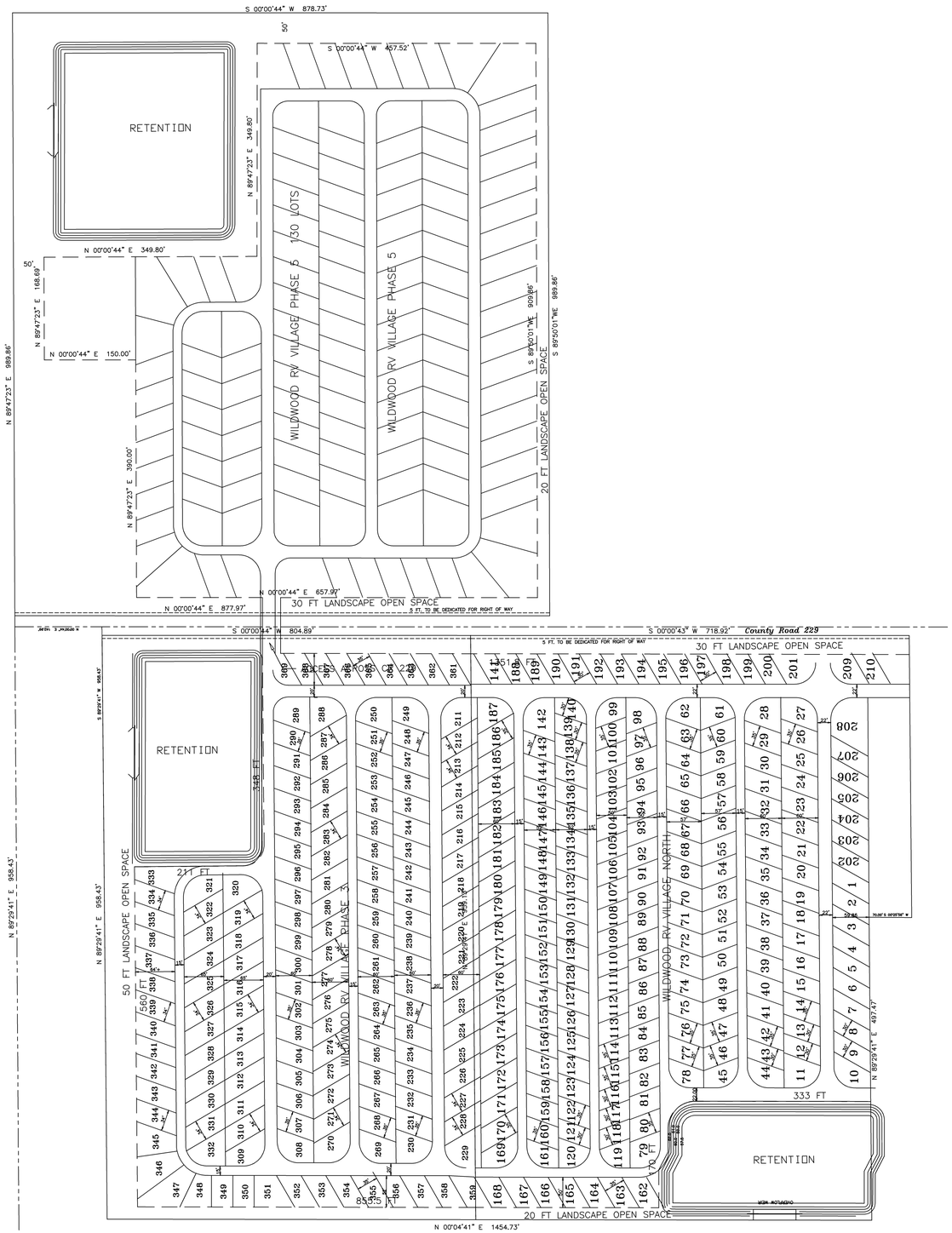

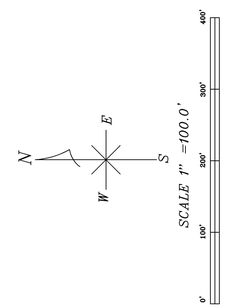

SITE AREA BREAKDOWN
TOTAL SITE AREA = 2,105,269 SF
GREEN AREA = 559,104 SF
GREEN AREA PERCENT = 26.56 %
TRAVEL TRAILER AREA = 1,546,165 SF

OPEN SPACE

DATE	REV.	BY

Design Services
4336 ST. LAWRENCE DRIVE
NEW PORT RICHEY, FL. 34655
(727)372-0566

PROJECT:
WILDWOOD RV VILLAGE
882 STATE ROAD 44
WILDWOOD, SUMTER COUNTY, FLORIDA

CLIENT:
AAMW ENTERPRISES, LLC
882 STATE ROAD 44
WILDWOOD, FLORIDA 34785
813-312-4274

DRAWN	RH
CHECKED	GPG
DATE	7-5-19
SCALE	1" = 100'
JOB NO.	17-005.00
SHEET	M-1
	- OF - SHEETS

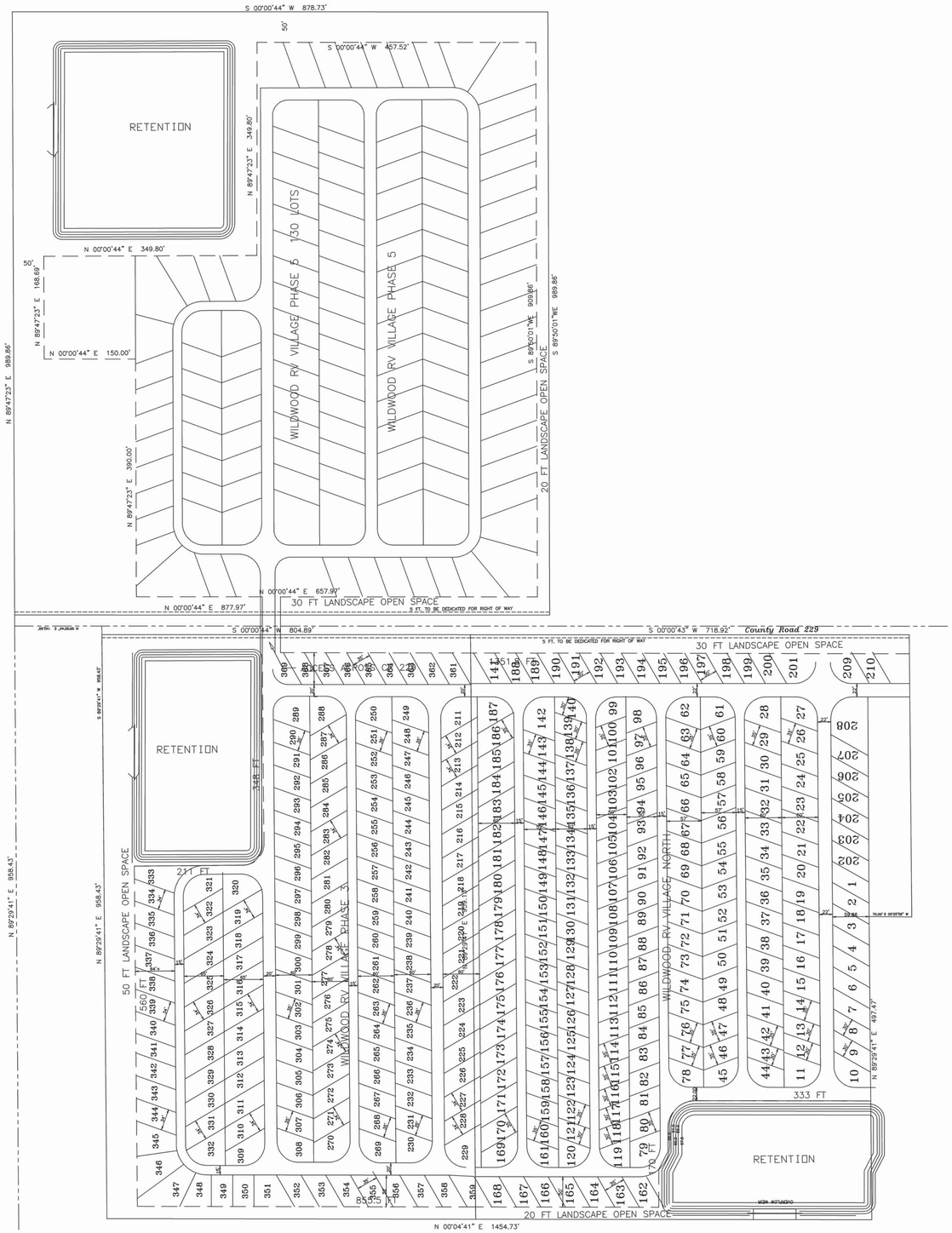

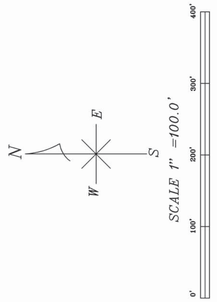

SITE AREA BREAKDOWN
TOTAL SITE AREA = 2,105,269 SF
GREEN AREA = 559,104 SF
GREEN AREA PERCENT = 26.56 %
TRAVEL TRAILER AREA = 1,546,165 SF

OPEN SPACE

DATE	REV.	BY

Design Services
4336 ST. LAWRENCE DRIVE
NEW PORT RICHEY, FL. 34655
(727)372-0566

PROJECT:
WILDWOOD RV VILLAGE
882 STATE ROAD 44
WILDWOOD, SUMTER COUNTY, FLORIDA

CLIENT:
AAMW ENTERPRISES, LLC
882 STATE ROAD 44
WILDWOOD, FLORIDA 34785
813-312-4274

DRAWN	RH
CHECKED	GPG
DATE	7-5-19
SCALE	1" = 100'
JOB NO.	17-005.00
SHEET	M-1
	- OF - SHEETS

SUMTER COUNTY
SPECIAL MASTER PROCEEDING

CASE NO.	R2020-0002
APPLICANT:	AAMW Enterprises, Inc.
REPRESENTATIVE:	Michael P. Wood
REQUESTED ACTION:	Rezone 34.4 acres MOL from A10C to RVPUD

RECOMMENDATION OF SPECIAL MASTER

On February 3, 2020, Applicants AAMW Enterprises, Inc. were present at the hearing before the Special Master requesting to 34.4 acres from A10C to RVPUD. The proposed conceptual plan (Attached) will add 289 new RV sites to an existing RV park. The original RV park is a vested use. The owner recently added an additional 15 acres with 210 new RV sites. This addition is under construction. This request is associated with Case CP2020-0001 that requests to amend the Future Land Use of both parcels to Commercial for expansion of an existing recreational vehicle park.

The only evidence presented at the hearing was the staff report, in which staff deemed the application sufficient and in compliance with the minimum requirements of the Sumter County Land Development Code and Comprehensive Plan and recommended approval. There was no public comment, and the Applicant did not provide further information.

Based upon the evidence presented at the hearing, the Special Master recommends Application R2020-0002 for APPROVAL to the Board of County Commissioners with the following conditions:

1. Development as a RV park and campground shall be as generally depicted in the conceptual plan submitted as part of application R2020-0002 and provided in the attachment.
2. The conceptual plan provides for 189 new lots. Lots may be used for RVs, tents, or park models. Any increase in intensity greater than 500 new lots on parcels C34A174, C34A476, and C35A003 must be approved by the Board of County Commissioners.
3. Mobile homes may not be installed in the expansion area with the exception of one on-site manager unit.
4. A traffic impact analysis (TIA), meeting Sumter County TIA guidelines, shall be provided by the applicant, and approved by Sumter County Engineering Division prior to site development permit issuance. The applicant shall coordinate with Sumter County Engineering Division to analyze the potential impacts to the public roadway system and identify appropriate mitigation strategies as necessary.
5. At least 25% of the overall RV park shall be retained in open space. Open space may be calculated using the entire RV park and open space being retained in the vested portion of the park.
6. A site development permit application must be submitted within one year. If site development is not complete within three years a new conceptual plan approval is required. The Director of Development Services may extend these deadlines for up to one year if permitting and development have proceeded in good faith.

ORDERED this 3rd day of February, 2020.

ZACHARY T. BROOME, ESQ.
Special Master
Florida Bar No. 91331

SUMTER COUNTY BOARD OF COUNTY COMMISSIONERS
EXECUTIVE SUMMARY

SUBJECT: * R2020-0009– Robbie Shoemaker for Crowder – Rezone 10 acres MOL from A10C (Agricultural – ten acre lot size) to RR5C (Rural Residential – five acre lot size)– CR 227/ Wildwood area.

REQUESTED ACTION: **Planning and Zoning Special Master Recommends Approval**

Meeting Type: Regular Meeting **DATE OF MEETING:** **5/12/2020**

CONTRACT: ☒ N/A Vendor/Entity:
Effective Date: Termination Date:
Managing Division / Dept: **Building & Code / Development Services**

BUDGET IMPACT:
FUNDING SOURCE:

Type: N/A **EXPENDITURE ACCOUNT:**

HISTORY/FACTS/ISSUES:

The applicant is requesting that a 10 parcel be rezoned from A10C (Agricultural – ten acre lot size) to RR5C (Rural Residential – five acre lot size). The property is inside the Urban Development Area. The requested zoning is consistent with the Comprehensive Plan standards.

The Planning and Zoning Special Master held a public hearing on May 4, 2020, and recommended approval.

PZSM Cases:
R2020-0009 Robbie Shoemaker for Crowder***
R2020-0010 Archie Ellwood for AEllwood, LLC
S2020-0001 Tommy's Hauling

Notified Property Owners:

PIN	Owners_Name
C11-023	MEARS LEVON A & CYNTHIA L*
C11-017	COUCH CHARMIE M (LE)
C11-047	ROOP WILLIAM NINEVA
C11-015	ANTOKAL LESLIE M & LORRIE E*
C11-021	HAGE MICHAEL J & MICHELLE G
C11-012	PINE TARR LLC
C14-001	LOCKE EDGAR D JR
C14-007	MILTON JOHN H & MARSHA E
C14-008	PINE TARR LLC
C11-079	CROWDER DENNIS A & JUDY M TTEE

Prepared by: **Sue Farnsworth** **Grammarly Check** ☒

RESOLUTION NUMBER _____

A RESOLUTION OF THE BOARD OF COUNTY COMMISSIONERS OF SUMTER COUNTY, FLORIDA, REZONING PROPERTY LOCATED WITHIN THE UNINCORPORATED LANDS OF THE COUNTY.

WHEREAS, the Board of County Commissioners of Sumter County received a complete and properly funded application for rezoning of property located within the unincorporated lands of Sumter County, and;

WHEREAS, after diligent review and consideration the above referenced rezoning was approved.

NOW, THEREFORE, BE IT RESOLVED by the Board of County Commissioners of Sumter County, Florida, as follows:

1. Based on competent substantial evidence presented and considered during a properly noticed quasi judicial hearing, the Board of County Commissioners of Sumter County hereby approves rezoning application R2020-0009 for property as described in the attachment. The land described in application R2020-0009 is hereby rezoned to RR5C, as the zoning category is described in the Sumter County Land Development Code.

DONE AND RESOLVED THIS 12th DAY OF May, 2020,
at _____, Sumter County, Florida.

ATTEST: GLORIA HAYWARD
Clerk of Circuit Court

_____
Deputy Clerk

BOARD OF COUNTY COMMISSIONERS
OF SUMTER COUNTY, FLORIDA

_____
Steve Printz, Chairman

Attachment

IN SEC 11, TWP 18S, RNG 22E; THE S 1/2 OF THE SW 1/4 OF THE SE ¼

SUMTER COUNTY
SPECIAL MASTER PROCEEDING

CASE NO.	R2020-0009
APPLICANT:	Dennis and Judy Crowder
REPRESENTATIVE:	Robbie Shoemaker
REQUESTED ACTION:	Rezone 20 acres MOL from A10C (Agricultural – ten acres – conventional housing) to RR5C (Rural Residential – five acres – conventional housing).

RECOMMENDATION OF SPECIAL MASTER

On May 4, 2020, Applicants Dennis and Judy Crowder, through Representative Robbie Shoemaker, were present at the hearing before the Special Master. At the hearing, the Representative stated that the application had been modified from requesting to rezone 20 acres to rezone 10 acres MOL from A10C (Agricultural – ten acres – conventional housing) to RR5C (Rural Residential – five acres – conventional housing). The application originally covered two legal parcels, C11-050 and C11-079, but the proposal now only applies to parcel C11-079 as C11-050 has been withdrawn from the application. The application site is in a rural area with a mixture of agricultural and rural residential uses. Adjacent properties are zoned A10C, Agricultural and RR5C. The property is within the Urban Development Area.

The RR5C zoning district provides for a range of densities, promote a rural residential atmosphere where families, depending on the district, may reside in one (1) conventional or Class A or B mobile home dwelling unit per parcel and grow food and keep livestock for domestic use, and also to provide a buffer between agricultural and higher density residential uses.

The landowner is requesting this rezoning to allow the two parcels be split into five-acre parcels. The proposed parcels meet the five-acre minimum lot size requirement of the Agricultural Future Land Use District within the Urban Development Area. An RR5C zoning assignment will allow the landowner to obtain building permits for a house on this property.

Pursuant to Sec. Section 13-313 (d) of the Sumter County Land Development Code, the following are the review criteria for LDC and zoning map amendments:

a) Change of conditions, or absence of changed conditions.
b) Community need, or lack of community need.
c) Benefits to the community.
d) The rights of private property owners.

The only evidence presented at the hearing was the staff report, in which staff deemed the application sufficient and consisted with the Sumter County Comprehensive Plan and Land Development Code and recommended approval. There was no public comment, and the Applicant did not provide further information.

Based on the evidence presented, the Special Master finds as follows:

a) The Oxford area is under increasing development pressure as The Villages development matures. The surrounding agricultural area is shifting into smaller farms and rural residential estates.
b) The rezoning will meet an individual property owner need rather than a community need.
c) The rezoning will benefit the landowner rather than the community.
d) The rezoning will not impinge on the rights of adjacent property owners.

Therefore, the Special Master recommends Application R2020-0009 for APPROVAL to the Board of County Commissioners at the commission meeting currently scheduled for May 12, 2020.

ORDERED this 5th day of May, 2020.

ZACHARY T. BROOME, ESQ.
Special Master
Florida Bar No. 91331

SUMTER COUNTY
REZONING APPLICATION

PLANNING AND ZONING SPECIAL MASTER
May 4, 2020

BOARD OF COUNTY COMMISSIONERS
May 12, 2020

CASE NO.:	R2020-0009
LAND OWNER:	Dennis and Judy Crowder
REPRESENTATIVE:	Robbie Shoemaker
REQUESTED ACTION:	Rezone 10 acres MOL from A10C (Agricultural – ten acres – conventional housing) to RR5C (Rural Residential – five acres – conventional housing).
PARCEL NUMBER:	C11-079
LEGAL DESCRIPTION:	IN SEC 11, TWP 18S, RNG 22E; THE N ½ OF THE S 1/2 OF THE SW 1/4 OF THE SE ¼.
EXISTING ZONING:	A10C
EXISTING USE:	vacant
FUTURE LAND USE:	Agricultural
PARCEL SIZE:	10 acres MOL
LOCATION:	Oxford area-East side of CR 227, 12000 ft north of E C-466. (Map 1).

SURROUNDING LAND USE AND ZONING
The application site is in a rural area with a mixture of agricultural and rural residential uses. Adjacent properties are zoned A10C, Agricultural and RR5C, Rural Residential. (Map 2). The property is within the Urban Development Area.

The RR5C zoning district provides for a rural residential atmosphere where families, depending on the district, may reside in one (1) conventional or Class A mobile home dwelling unit per parcel and grow food and keep livestock for domestic use, and also to provide a buffer between agricultural and higher density residential uses.

CASE SUMMARY

The landowner is requesting this rezoning to allow the parcel to be split into five-acre parcels. The proposed parcels meet the five-acre minimum lot size requirement of the Agricultural Future Land Use District within the Urban Development Area. An RR5C zoning assignment will allow the landowner to obtain building permits on the newly created parcels.

The requested rezoning is consistent with the assigned future land use designation and policies of the Unified Comprehensive Plan. The requested rezoning is consistent with the surrounding development pattern and will not change the allowable density or intensity of development.

This rezoning request originally included parcel C11-050. The applicant reduced the request at the Planning and Zoning Special Master Hearing to only include parcel C11-079.

CASE ANALYSIS:

Section 13-313 (d), *General Administration of Amendment and Permit Applications-Review and Approval Process,* provides for the following review criteria for LDC and zoning map amendments:

a) Change of conditions, or absence of changed conditions.
   The Oxford area is under increasing development pressure as The Villages development matures. The surrounding agricultural area is shifting into smaller farms and rural residential estates.
b) Community need, or lack of community need.
   The rezoning will meet an individual property owner need rather than a community need.
c) Benefits to the community.
   The rezoning will benefit the landowner rather than the community.
d) The rights of private property owners.
   The rezoning will not impinge on the rights of adjacent property owners.

DEVELOPMENT SERVICES DEPARTMENT STAFF CONCLUSIONS

Proof of ownership is on file.

Staff deemed the application sufficient and in compliance with the minimum requirements of the Sumter County Land Development Code and Comprehensive Plan and recommends approval.

Notices Sent: 10 (Support/no comment) 0 (Oppose) 0

Map 1
General Location of R2020-0009

Map 2
Surrounding Area with Zoning Designations
R2020-0009

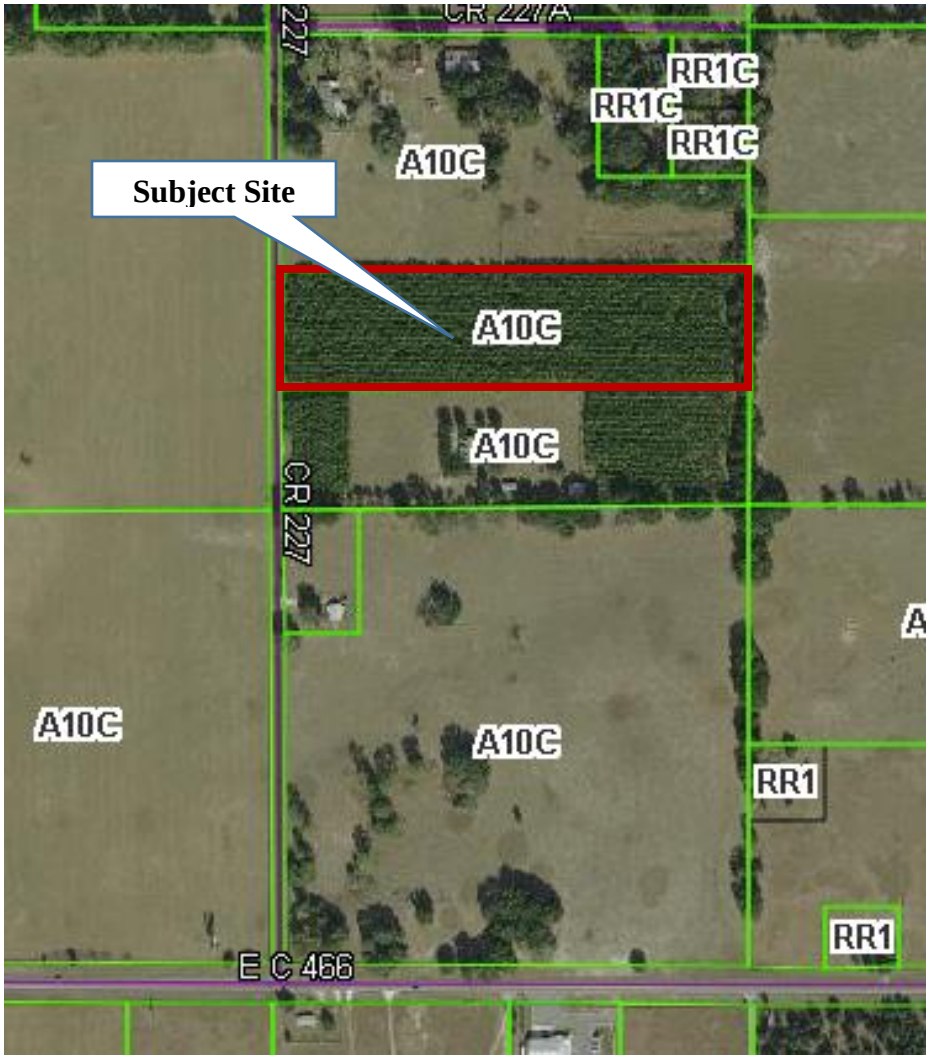

SUMTER COUNTY BOARD OF COUNTY COMMISSIONERS
EXECUTIVE SUMMARY

SUBJECT: * R2020-0010– Archie Ellwood for AEllwood, LLC – Rezone 0.9 acres MOL from R2C (Residential – ½ -acre minimum lot size, conventional housing) to R2M (Residential-1/2 acre minimum lot size, allowing for mobile homes) – CR 647C/ Nobleton area.

REQUESTED ACTION: **Planning and Zoning Special Master Recommends Approval**

Meeting Type: Regular Meeting **DATE OF MEETING:** **5/12/2020**

CONTRACT: ☒ N/A Vendor/Entity:
Effective Date: Termination Date:
Managing Division / Dept: **Building & Code / Development Services**

BUDGET IMPACT:
FUNDING SOURCE:

Type: N/A **EXPENDITURE ACCOUNT:**

HISTORY/FACTS/ISSUES:

The applicant is requesting that a 0.9-acre parcel be rezoned fromR2C to R2M. Approval will allow the option of installing a Class B mobile home.

The Planning and Zoning Special Master held a public hearing on May 4, 2020, and recommended approval.

PZSM Cases:
R2020-0009 Robbie Shoemaker for Crowder
R2020-0010 Archie Ellwood for AEllwood, LLC***
S2020-0001 Tommy's Hauling

Notified Property Owners:

PIN	Owners_Name
M19-007	ELLWOOD ARCHIE OLSON JR & APRI
M19-050	KNIFFEN ERIC R & LEHMANN CINDY
M19-054	MILAK HAE CHU
L24C027	FAIRCLOTH SARAH E & MINER BRAD
L24C009	ARCHER GERALD W & CARRIE O
L24C046	BORDEAUX ROBERT & JOAN
L24C030	BERLINSKI LINDA
L24C047	STREIGHT JEAN M & GUGLIOTTA NA
L24C029	HANCOCK DAVID
L24C008	WATERS BARBARA A
L24C007	ROUISSE PAUL M
L24C031	FISCHBACH TERRI & PETER & RUTH
L24C045	HAAS NANCY J & LAVERNE W
L24C034	COURTNEY THOMAS R & EILEEN L T
L24C042	LAPI PETER W
L24C033	HOCH JON & FERRERA ROXANNE ELI
L24C043	MOORE ROBERT EDWARD III
L24C032	MOEN D I & DIANNE

L24C044	WALKER JENNIFER D & COLLINS GE
L24C004	D'AMICO ESTELLE W
L24C005	BLUST DEBORAH S
L24C006	AELLWOOD LLC
L24C003	ANDERSON ARCHIE H & LOIS C

Prepared by:	**Sue Farnsworth**	**Grammarly Check**	☒

RESOLUTION NUMBER _____

A RESOLUTION OF THE BOARD OF COUNTY COMMISSIONERS OF SUMTER COUNTY, FLORIDA, REZONING PROPERTY LOCATED WITHIN THE UNINCORPORATED LANDS OF THE COUNTY.

WHEREAS, the Board of County Commissioners of Sumter County received a complete and properly funded application for rezoning of property located within the unincorporated lands of Sumter County, and;

WHEREAS, after diligent review and consideration the above referenced rezoning was approved.

NOW, THEREFORE, BE IT RESOLVED by the Board of County Commissioners of Sumter County, Florida, as follows:

1. Based on competent substantial evidence presented and considered during a properly noticed quasi judicial hearing, the Board of County Commissioners of Sumter County hereby approves rezoning application R2020-0010 for property as described in the attachment. The land described in application R2020-0010 is hereby rezoned to R2M, as the zoning category is described in the Sumter County Land Development Code.

DONE AND RESOLVED THIS 12th DAY OF May, 2020,
at _____, Sumter County, Florida.

ATTEST: GLORIA HAYWARD
Clerk of Circuit Court

_____
Deputy Clerk

BOARD OF COUNTY COMMISSIONERS
OF SUMTER COUNTY, FLORIDA

_____
Steve Printz, Chairman

Attachment

LOT 6 HOLIDAY HEIGHT BLK A UNRECORDED SUB OR 139 PG 394

SUMTER COUNTY
SPECIAL MASTER PROCEEDING

CASE NO.	R2020-0010
APPLICANT:	AEllwood, LLC
REPRESENTATIVE:	Archie Ellwood
REQUESTED ACTION:	Rezone 0.9 acres MOL from R2C (Residential – ½ -acre minimum lot size, conventional housing) to R2M (Residential-1/2 acre minimum lot size, allowing for mobile homes).

RECOMMENDATION OF SPECIAL MASTER

On May 4, 2020, Applicant AEllwood, LLC, through Representative Archie Ellwood, was present at the hearing before the Special Master requesting to rezone 0.9 acres MOL from R2C (Residential – ½ -acre minimum lot size, conventional housing) to R2M (Residential-1/2 acre minimum lot size, allowing for mobile homes). The application site is in an unrecorded subdivision in a rural area with a mixture of homesites and agricultural uses. Adjacent properties are zoned Residential (R2C – south, R2M – north, RR1C - west) and Agricultural (A10C – east).

The R2M zoning district provides for a residential atmosphere where families may reside in one (1) conventional or Class A or B mobile home dwelling unit per parcel or a multifamily building, and to provide a buffer between districts of lower and higher residential densities, commercial or other more intensive zoning districts.

The landowner seeks to rezone the property to allow installation of a Class B mobile home.

Pursuant to Sec. Section 13-313 (d) of the Sumter County Land Development Code, the following are the review criteria for LDC and zoning map amendments:

a) Change of conditions, or absence of changed conditions.
b) Community need, or lack of community need.
c) Benefits to the community.
d) The rights of private property owners.

The only evidence presented at the hearing was the staff report, in which staff deemed the application sufficient and consisted with the Sumter County Comprehensive Plan and Land Development Code and recommended approval. There was no public comment, and the Applicant did not provide further information.

Based on the evidence presented, the Special Master finds as follows:

a) The original mobile home on site has deteriorated. This rezoning is necessary to replace the unit with a more recent Class B unit.
b) The rezoning will meet an individual property owner need rather than a community need.
c) The rezoning will allow a landowner to replace an older mobile home.
d) The rezoning will not impinge on the rights of adjacent property owners.

Therefore, the Special Master recommends Application R2020-0010 for APPROVAL to the Board of County Commissioners at the commission meeting currently scheduled for May 12, 2020.

ORDERED this 5th day of May, 2020.

ZACHARY T. BROOME, ESQ.
Special Master
Florida Bar No. 91331

Susan.farnsworth@sumtercountyfl.gov

$1600.00

Board of County Commissioners

352-689-4400 x4750 **Development Services Department**

Planning Services Division

7375 Powell Rd., Ste. 115, Wildwood, FL 34785 Phone (352) 689-4400 FAX: (352) 689-4401

Website: http://sumtercountyfl.gov

Project # _____ ZSM _____

Date Rec'd: _____

Planner: _____ BOCC _____

LAND USE AMENDMENT AND/OR REZONING APPLICATION

X **Rezoning**

____ **Land Use Amendment (<10 acres)**

____ **Land Use Amendment (10 acres or more)**

Applicant Information:

Name of Property Owner(s): AEllwood LLC

Address: 7245 CR 647 CE

Bushnell FL 33513

Owner Phone: 813-355-6767 Email: AEllwood01@aol.com

Name of Agent: Archie Ellwood

Address: 7416 Mint Julep Dr

Riverview FL 33578

Agent Phone: 813-355-6767 Email: AEllwood01@aol.com

Property Information:

Legal Description of the property (lengthy descriptions may be attached)

lot 6 Holiday Height Blk A unrecorded Sub or 139 PG 394 & AN undiv 2/86 int in the Public Boat landing as desc in Or258 PG 31

Street Address: 7245 CR 647 CE

Parcels # L24C006 **Current Use:** _____

Current Future Land Use: _____ **Current Zoning:** R2C

Requested Future Land Use_____ **Requested Zoning:** R2M

Acreage requested: All (.90)

Reason for the request:

Install older Mobile home

Please Provide:

- ☑ **Deed or other proof of ownership**
- ☑ **Signed authorization if applicant is not the land owner**
- ☑ **Legal description of the area under application. (lengthy or complex legal descriptions may be required in digital/text format)**

All properties for which applications require public hearings before the PZSM or commission shall be posted by the applicant with plaques furnished by the director. Such plaques shall identify the application, the requested action, and the date, time and place of hearing. Plaques shall be sufficiently conspicuous in terms of size, location, and content to provide reasonably adequate notice to potentially interested persons of the matter that will appear on the authority's agenda. Such notices shall be posted at least seven (7) days prior to the first hearing at which the subject property will be considered, at locations specified by the director. (Sumter County Land Development Code Sec. 13-315(a)(2).

Under penalties of perjury, I declare the above information that I have given to be true and correct to the best of my knowledge and belief.

Signature 4-2-2020 **Date**

Archie O Ellwood
Print Name

A public hearing before the Zoning Special Master (ZSM) will be scheduled once the application is found to be complete. The hearing will be at 6 P.M. at 510 Colony Blvd., The Villages, FL. Your appearance or authorized representative is required at this hearing. Failure for you or your authorized representative's attendance will cause your application to be handled in accordance with the policy adopted in the Sumter County Land Development Code. Minor Special Use Permits are decided by the ZSM. Conditions of approval may be assigned to assure compatibility with the neighborhood. Hearings may be postponed by the ZSM at his/her discretion.

Detail by Entity Name

Florida Limited Liability Company
AELLWOOD, LLC

Filing Information

Document Number	L16000164490
FEI/EIN Number	81-3766049
Date Filed	09/06/2016
State	FL
Status	ACTIVE

Principal Address

7416 MINT JULEP DRIVE
RIVERVIEW, FL 33578

Mailing Address

7416 MINT JULEP DRIVE
RIVERVIEW, FL 33578

Registered Agent Name & Address

ELLWOOD, ARCHIE O, JR
7416 MINT JULEP DRIVE
RIVERVIEW, FL 33578

Authorized Person(s) Detail

Name & Address

Title PMGR

ELLWOOD, ARCHIE O, JR
7416 MINT JULEP DRIVE
RIVERVIEW, FL 33578

Title VMGR

ELLWOOD, APRIL L
7416 MINT JULEP DRIVE
RIVERVIEW, FL 33578

Title TMGR

ELLWOOD, SHARON L
7416 MINT JULEP DRIVE

RIVERVIEW, FL 33578

Title SMGR

ELLWOOD, ARCHIE O
7416 MINT JULEP DRIVE
RIVERVIEW, FL 33578

Annual Reports

Report Year	Filed Date
2018	01/15/2018
2019	01/20/2019
2020	01/27/2020

Document Images

01/27/2020 -- ANNUAL REPORT	View image in PDF format
01/20/2019 -- ANNUAL REPORT	View image in PDF format
01/15/2018 -- ANNUAL REPORT	View image in PDF format
02/05/2017 -- ANNUAL REPORT	View image in PDF format
09/06/2016 -- Florida Limited Liability	View image in PDF format

Florida Department of State, Division of Corporations

SUMTER COUNTY
REZONING APPLICATION

PLANNING AND ZONING SPECIAL MASTER
May 4, 2020

BOARD OF COUNTY COMMISSIONERS
May 12, 2020

CASE NO.:	R2020-0010
LAND OWNER:	AEllwood, LLC
REPRESENTATIVE:	Archie Ellwood
REQUESTED ACTION:	Rezone 0.9 acres MOL from R2C (Residential – ½ -acre minimum lot size, conventional housing) to R2M (Residential-1/2 acre minimum lot size, allowing for mobile homes).
PARCEL NUMBER:	L24C006
LEGAL DESCRIPTION:	LOT 6 HOLIDAY HEIGHT BLK A UNRECORDED SUB OR 139 PG 394
EXISTING ZONING:	R2C
EXISTING USE:	Mobile Home
FUTURE LAND USE:	Rural Residential
PARCEL SIZE:	0.9 acres MOL
LOCATION:	Nobleton area – East side of CR 647C-E, 900 foot north of CR 647C-S (Map 1).

SURROUNDING LAND USE AND ZONING
The application site is in an unrecorded subdivision in a rural area with a mixture of homesites and agricultural uses. Adjacent properties are zoned Residential (R2C – south, R2M – north, RR1C - west) and Agricultural (A10C – east) (Map 2).

Surrounding properties include a mixture of housing types and ages. The Sumter County Property Appraiser's office indicates Holiday Heights was initially developed in the early 1970's. The majority of the houses are mobile homes. The subject property was originally developed with a 1972 mobile home.

The R2M zoning district provides for a residential atmosphere where families may reside in one (1) conventional or Class A or B mobile home dwelling unit per parcel or a multifamily building, and to provide a buffer between districts of lower and higher residential densities, commercial or other more intensive zoning districts, (LDC 13-422(a)(2)).

CASE SUMMARY

This rezoning request affects a 0.9-acre parcel. The original parcel was lawfully created as part of an unrecorded subdivision. This application seeks to rezone the property to allow installation of a Class B mobile home.

The requested rezoning is consistent with the assigned future land use designation and policies of the Unified Comprehensive Plan. The requested rezoning is consistent with the surrounding development pattern and will not change the allowable density or intensity of development.

CASE ANALYSIS:

Section 13-313 (d), *General Administration of Amendment and Permit Applications-Review and Approval Process*, provides for the following review criteria for LDC and zoning map amendments:

a) Change of conditions, or absence of changed conditions.
   The original mobile home on site has deteriorated. This rezoning is necessary to replace the unit with a more recent Class B unit..
b) Community need, or lack of community need.
   The rezoning will meet an individual property owner need rather than a community need.
c) Benefits to the community.
   The rezoning will allow a landowner to replace an older mobile home.
d) The rights of private property owners.
   The rezoning will not impinge on the rights of adjacent property owners.

DEVELOPMENT SERVICES DEPARTMENT STAFF CONCLUSIONS

Staff deemed the application sufficient and in compliance with the minimum requirements of the Sumter County Land Development Code and Comprehensive Plan and recommends approval.

Notices Sent: 23 (Support/no comment) 0 (Oppose) 0

Map 1
General Location of R2020-0010

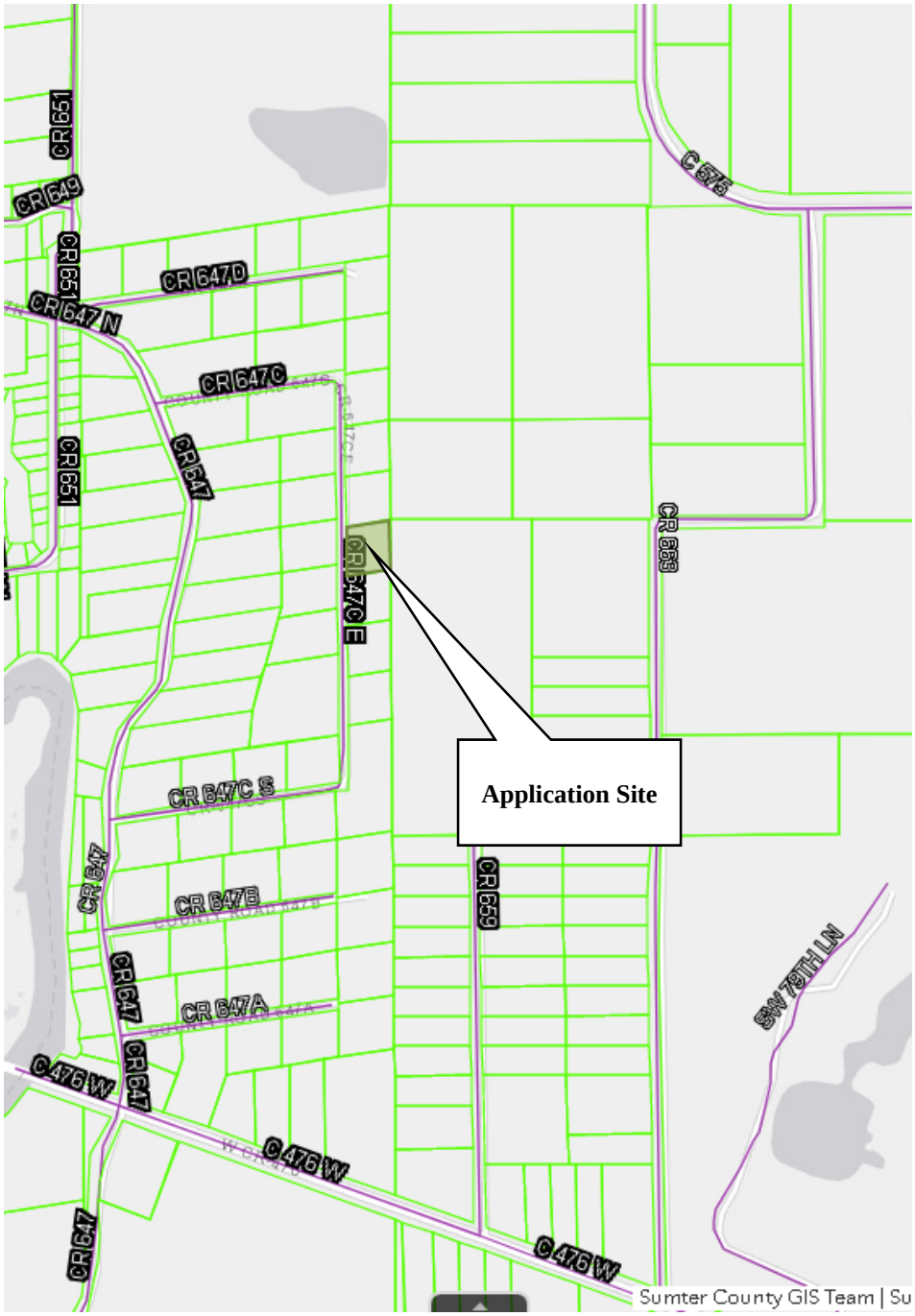

Map 2
Surrounding Area with Zoning Designations
R2020-0010

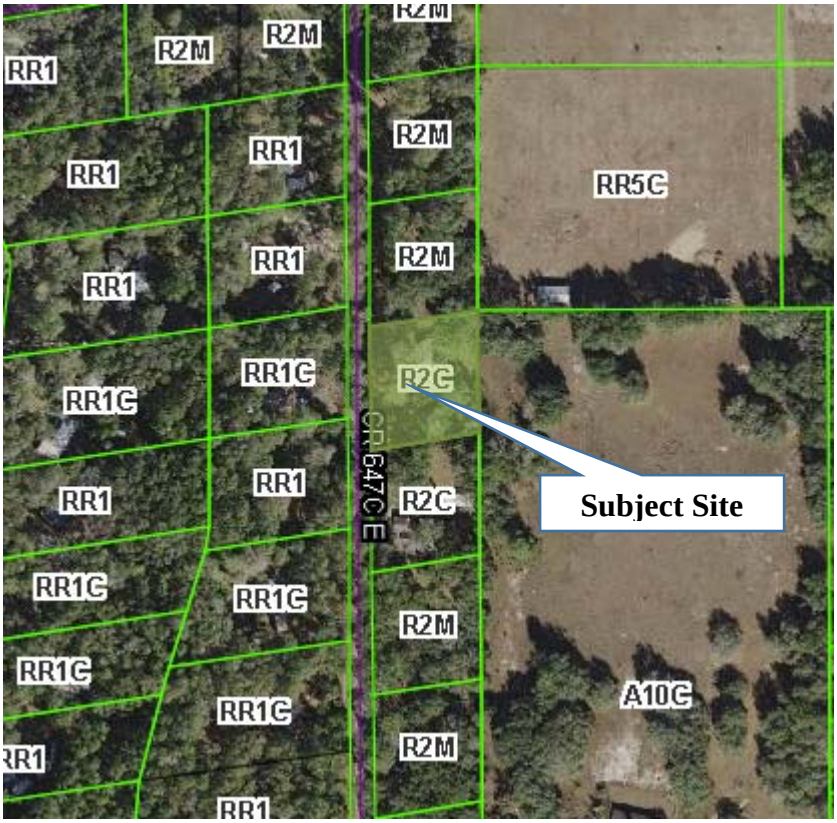

Board of County Commissioners
Sumter County, Florida

7375 Powell Road, Suite 200 • Wildwood, FL 34785 • Phone (352) 689-4400 • FAX: (352) 689-4401
Website: http://sumtercountyfl.gov

RECEIVED
APR 21 2020
BY:

April 15, 2020

ARCHER GERALD W & CARRIE O
7155 CR 647CE
BUSHNELL, FL 33513

To property owners whose property boundaries are within a distance of 500 feet of the outside perimeter of a property in the name of **Aellwood LLC** (see map on reverse). The property is being considered at a public hearing for Rezoning.

CASE# **R2020-0010** - **Archie Ellwood – Rezone 0.9 acres MOL from R2C (Residential – conventional housing) to R2M (Residential – allowing for mobile homes).**

A **public hearing** before the Planning and Zoning Special Master will be held at **The Villages Sumter County Service Center, 7375 Powell Rd, Room 102, Wildwood, FL 34785 on May 4, 2020, at 6:00 p.m.**

The recommendations of the Planning and Zoning Special Master will be presented to the Board of Sumter County Commissioners at a Public Hearing to be held on **May 12, 2020, at 5:30 P.M., The Everglades Recreation Center, Grand Canyon Room, 5497 Marsh Bend Trail, The Villages, FL.**

Written comments submitted will be heard. Hearings may be continued from time to time as found necessary. Please return this form to: SUMTER COUNTY PLANNING DIVISION, 7375 Powell Road, Suite 115, Wildwood, Florida, 34785. Alternatively, comments may be emailed to susan.farnsworth@sumtercountyfl.gov **Please include the case number on all emails.** Questions should be directed to Sue Farnsworth at the Planning Division at (352)689-4400.

_____ I support the above.
__✓__ I have no comment on the above.
_____ I do not support the above for the following reason(s):_____

_____

_____

Please return no later than **April 28, 2020** RE: CASE# **R2020-0010**

Al Butler, Dist 1
(352) 689-4400
7375 Powell Road
Wildwood, FL 34785

Don Burgess, Dist 3
(352) 689-4400
7375 Powell Road
Wildwood, FL 34785

Steve Printz, Dist 5
Chairman
(352) 689-4400
7375 Powell Road
Wildwood, FL 34785

Doug Gilpin, Dist 2
(352) 689-4400
7375 Powell Road
Wildwood, FL 34785

Garry Breeden, Dist 4
Vice Chairman
(352) 689-4400
7375 Powell Road
Wildwood, FL 34785

Bradley S. Arnold,
County Administrator
(352) 689-4400
7375 Powell Road
Wildwood, FL 34785

Gloria R. Hayward, Clerk & Auditor
(352) 569-6600
215 East McCollum Avenue
Bushnell, FL 33513

County Attorney
The Hogan Law Firm
Post Office Box 485
Brooksville, Florida 34605

Board of County Commissioners
Sumter County, Florida

7375 Powell Road, Suite 200 • Wildwood, FL 34785 • Phone (352) 689-4400 • FAX: (352) 689-4401
Website: http://sumtercountyfl.gov

April 15, 2020

COURTNEY THOMAS R & EILEEN L T
1650 PINELLAS PT DR S
ST PETERSBURG, FL 33712

Tom Courtney 4-19-20

To property owners whose property boundaries are within a distance of 500 feet of the outside perimeter of a property in the name of **Aellwood LLC** (see map on reverse). The property is being considered at a public hearing for Rezoning.

CASE# **R2020-0010** - **Archie Ellwood – Rezone 0.9 acres MOL from R2C (Residential – conventional housing) to R2M (Residential – allowing for mobile homes).**

A **public hearing** before the Planning and Zoning Special Master will be held at **The Villages Sumter County Service Center, 7375 Powell Rd, Room 102, Wildwood, FL 34785 on May 4, 2020, at 6:00 p.m.**

The recommendations of the Planning and Zoning Special Master will be presented to the Board of Sumter County Commissioners at a Public Hearing to be held on **May 12, 2020, at 5:30 P.M., The Everglades Recreation Center, Grand Canyon Room, 5497 Marsh Bend Trail, The Villages, FL.**

Written comments submitted will be heard. Hearings may be continued from time to time as found necessary. Please return this form to: SUMTER COUNTY PLANNING DIVISION, 7375 Powell Road, Suite 115, Wildwood, Florida, 34785. Alternatively, comments may be emailed to susan.farnsworth@sumtercountyfl.gov **Please include the case number on all emails**. Questions should be directed to Sue Farnsworth at the Planning Division at (352)689-4400.

_X_ I support the above.
_____ I have no comment on the above.
_____ I do not support the above for the following reason(s):_____

Please return no later than **April 28, 2020** RE: CASE# **R2020-0010**

Al Butler, Dist 1
(352) 689-4400
7375 Powell Road
Wildwood, FL 34785

Don Burgess, Dist 3
(352) 689-4400
7375 Powell Road
Wildwood, FL 34785

Steve Printz, Dist 5
Chairman
(352) 689-4400
7375 Powell Road
Wildwood, FL 34785

Doug Gilpin, Dist 2
(352) 689-4400
7375 Powell Road
Wildwood, FL 34785

Garry Breeden, Dist 4
Vice Chairman
(352) 689-4400
7375 Powell Road
Wildwood, FL 34785

Bradley S. Arnold,
County Administrator
(352) 689-4400
7375 Powell Road
Wildwood, FL 34785

Gloria R. Hayward, Clerk & Auditor
(352) 569-6600
215 East McCollum Avenue
Bushnell, FL 33513

County Attorney
The Hogan Law Firm
Post Office Box 485
Brooksville, Florida 34605

SUMTER COUNTY BOARD OF COUNTY COMMISSIONERS
EXECUTIVE SUMMARY

SUBJECT: * S2020-0001– James Gough for Tommy's Hauling – Renew and modifying a major special use permit for a sand excavation and hauling business– CR 526/ Sumterville area.

REQUESTED ACTION: **Planning and Zoning Special Master Recommends Approval with Conditions**

Meeting Type: Regular Meeting **DATE OF MEETING:** **5/12/2020**

CONTRACT: ☒ N/A Vendor/Entity:
Effective Date: Termination Date:
Managing Division / Dept: **Building & Code / Development Services**

BUDGET IMPACT:
FUNDING SOURCE:

Type: N/A **EXPENDITURE ACCOUNT:**

HISTORY/FACTS/ISSUES:

The applicant is requesting to renew and modify a special use permit for a sand excavation business. The sand borrow pit is played out. The owner is requesting to be able to refill the borrow pit with sand, rock, and clay.

The Planning and Zoning Special Master held a public hearing on May 4, 2020, and recommended approval with the conditions provided in the staff report.

PZSM Cases:
R2020-0009 Robbie Shoemaker for Crowder
R2020-0010 Archie Ellwood for AEllwood, LLC
S2020-0001 Tommy's Hauling***

Notified Property Owners:

PIN	Owners_Name
J24A008	CARNEGLIA DANIEL D & APRIL D
J24A007	CARNEGLIA DANIEL D & ZACHARY A
J24A005	CARNEGLIA RAYMOND & DIANA
J13B168	CLANG LEO O & VIVIAN
J24-030	CLARK LOWELL F TRUSTEE
J13B200	COSSIN JASON
J13-035	CURRAN JOHN J SR & BRENDA S
J24A006	ENNIST FRANCIS J & JOHNSON KAR
J24A010	FUDGE FREDDIE LELAND III & REB
J24-110	HI FLAVOR MEATS INC
J24A012	HOESCH KENNETH P
J13-033	IZQUIERDO ELADIO & MABEL
J24A003	MANN BARRY H & BARBARA S TTEES
J13-031	MERRITT JOEL A ETAL
J24A013	NIELSEN TOM P & ROXANNE BAAD (
J13-109	STEPHENS CARL

J24A009 TOMMY'S HAULING INC

Prepared by: **Sue Farnsworth** **Grammarly Check** ☒

SUMTER COUNTY
SPECIAL MASTER PROCEEDING

CASE NO.	S2020-0001
APPLICANT:	James Gough for Tommy's Hauling
REQUESTED ACTION:	Renew and modifying a major special use permit for a sand excavation and hauling business.

RECOMMENDATION OF SPECIAL MASTER

On May 4, 2020, Applicant James Gough for Tommy's Hauling was present at the hearing before the Special Master requesting to renew and modify a major special use permit for a sand excavation and hauling business. The existing sand hauling business is a vested sand operation with a valid special use permit for sand excavation (S2015-0003). The subject property is located at the western terminus of CR 526. The borrow pit has been played out and the applicant is asking to be able to refill the pit with clean fill, sand, clay and rock. The fill material will be deposited along the edges of the borrow pit, working toward the center.

Special Use Permit S2015-0003 expired on April 14, 2020. The applicant filed the application for this special use permit renewal in a timely manner. There are no active code compliance cases associated with this business.

Pursuant to Section 13-332, Sumter County Land Development Code, the proposed special use must meet the following requirements for approval:

a. The use must be in harmony with the purpose and intent of this chapter.
b. The use must be compatible with surrounding existing and anticipated uses.
c. The use must not adversely affect the public interest. Adequate traffic circulation, sanitary, utility, drainage, refuse management, emergency services and similar necessary facilities and services shall be available for the use. A use shall not create hazardous vehicular or pedestrian traffic conditions, or parking congestion, or generate traffic that exceeds the capability of roads and streets serving the use, or otherwise affect public safety.
d. The site must be suitable for the proposed use, considering flood hazard, drainage, soils, and other conditions which may pose a danger to life, health or property.
e. The development of the use shall have no more than a minimal adverse effect on the environment, public health, safety, and welfare.
f. Proposed improvements and the level of cooperation by the developer shall be considered.
g. Unless specifically provided otherwise, the use shall comply with this code.

The following additional requirements must be considered in reviewing special uses (Sec 13 - 232(2)).

a. The use must not be detrimental to the neighborhood environment or unduly infringe on the rights of surrounding property owners.
a. A vehicular parking or traffic problem must not be created, and the vehicular average daily traffic created on local roads must not be increased in such a manner as to degrade the established function of the roadway or create hazards to public health or safety. The

commission and staff may rely on input from the Florida Department of Transportation, the Florida Highway Patrol and the sheriff's office in making this determination.

b. Screening and buffering sufficient to minimize interference with the enjoyment of surrounding properties may be required.

The only evidence presented at the hearing was the staff report, in which staff deemed the application sufficient and consisted with the Sumter County Comprehensive Plan and Land Development Code and recommended approval. There were no members of the public present, and the Applicant did not provide further information.

Based on the evidence presented, the Special Master finds as follows:

a. The Land Development code permits excavation as an industrial use, in the RR5C zoning district with a special use permit (Table 13-431, Principal uses). The sand excavation and hauling business has maintained the required special use permit.
b. The facility meets the required land use and zoning requirements and was previously permitted for operation.
c. Renewal of the special use permit will not adversely affect the public interest. Allowing the landowner to fill the existing pit will not create a hazard or adverse impact to the public.
d. The proposed permit extension and filling activity will not pose a danger to life, health or property. It is an existing sand excavation facility with no wetlands, flood zone land, or ongoing drainage problems.
e. The proposed permit extension and filling activity will not pose an adverse effect on the environmental, public health, safety or public welfare.
f. The applicant is not proposing any new improvements. They have been very cooperative in developing the application and in rescheduling the request due to the COVID-19 state of emergency.
g. The request complies with the Land Development code. Conditions of approval have been carried forward from S2015-0003..
h. The continued use of this facility will not unduly infringe on the rights of surrounding property owners.
i. Trucks will continue using CR 526 to access US 301.
j. Additional screening and buffers are not required.

Therefore, the Special Master recommends Application S2020-0001 for APPROVAL to the Board of County Commissioners at the commission meeting currently scheduled for May 12, 2020 SUBJECT TO THE FOLLOWING CONDITIONS:

1. This special use permit allows the operation of sand excavation facility and the restoration of the existing borrow pit with clean fill material and rock.
2. This Special Use Permit shall be valid through May 12, 2025.
3. Site excavation and reclamation shall follow the engineered plan provided with S2015-0003.
    a. The borrow pit shall be filled with common fill, consisting of granular soil free of organic matter and stones. Layers of fill shall be compacted as provided in the engineered plans.

b. The east property line shall be planted with a tree line as shown in the engineered plans. Existing trees along the east property line shall be retained and credited as part of the required tree line.

4. Any change in ownership of the subject property shall be reported to the County within 30 days. Conditions of this special use permit are binding on all future property owners or excavators.
5. Outdoor hours of operation shall be limited to Monday through Friday, 8:00 am to 6:00 pm.
6. Truck access to the facility shall be by CR 526.
7. County personnel shall be allowed to access the site during normal business hours to perform unscheduled monitoring inspections.
8. Suspension, expiration, or revocation of any other agency permit shall result in the immediate suspension, expiration, or revocation of this special use permit.
9. This special use permit may be suspended or revoked by the Board of County Commissioners consistent with Section 13-333(e), Sumter County Land Development Code.

ORDERED this 5th day of May, 2020.

ZACHARY T. BROOME, ESQ.
Special Master
Florida Bar No. 91331

Board of County Commissioners

Development Services Department

Planning Services Division

7375 Powell Rd., Ste. 115, Wildwood, FL 34785 Phone (352) 689-4400 FAX: (352) 689-4401

Website: http://sumtercountyfl.gov

Project # _____ ZSM date_____

Date Recv'd:_____

Planner:_____ BOCC date_____

SPECIAL USE PERMIT APPLICATION

_____**Residential** __X__**Commercial**

(Minor requests are approved by ZAB--- Major requests approved by BOCC)

Request: (Additional information may be attached)

see attached

Applicant Information:

Name of Petitioner(s): Tommy's Hauling

(or Company/Corp. Name)

Mailing Address: 4912 CR 300; Lake Panasoffkee, Fl. 33538

Phone:_____ Email: e.wildwoodautor@cfl.rr.com

Mobile: 352-303-8585 Fax: 352-748-5800

TOMMY'S HAULING
4912 C.R. 300
Lake Panasoffkee, Florida 33538

Cell# (352) 303-8585

March 4, 2020

Board of Sumter County
Commissioners
319 E. Anderson Avenue
Bushnell, Florida 33513

Re: Special Use Permit for Lot 6, Barwick's Addition,
Sumterville, Florida

Dear Sirs,

Our new business plan is, Gradual Reclamation Use. Upon approval, we will bring in the following (clean materials) into the pit as follows:

1. Clay Material
2. Sumter County Stone
3. Fill Dirt

We will pack these materials along the sides of the pit and will start building from there until excavation level is completed.

Yours truly,

James T. Gough

James T. (Tommy) Gough

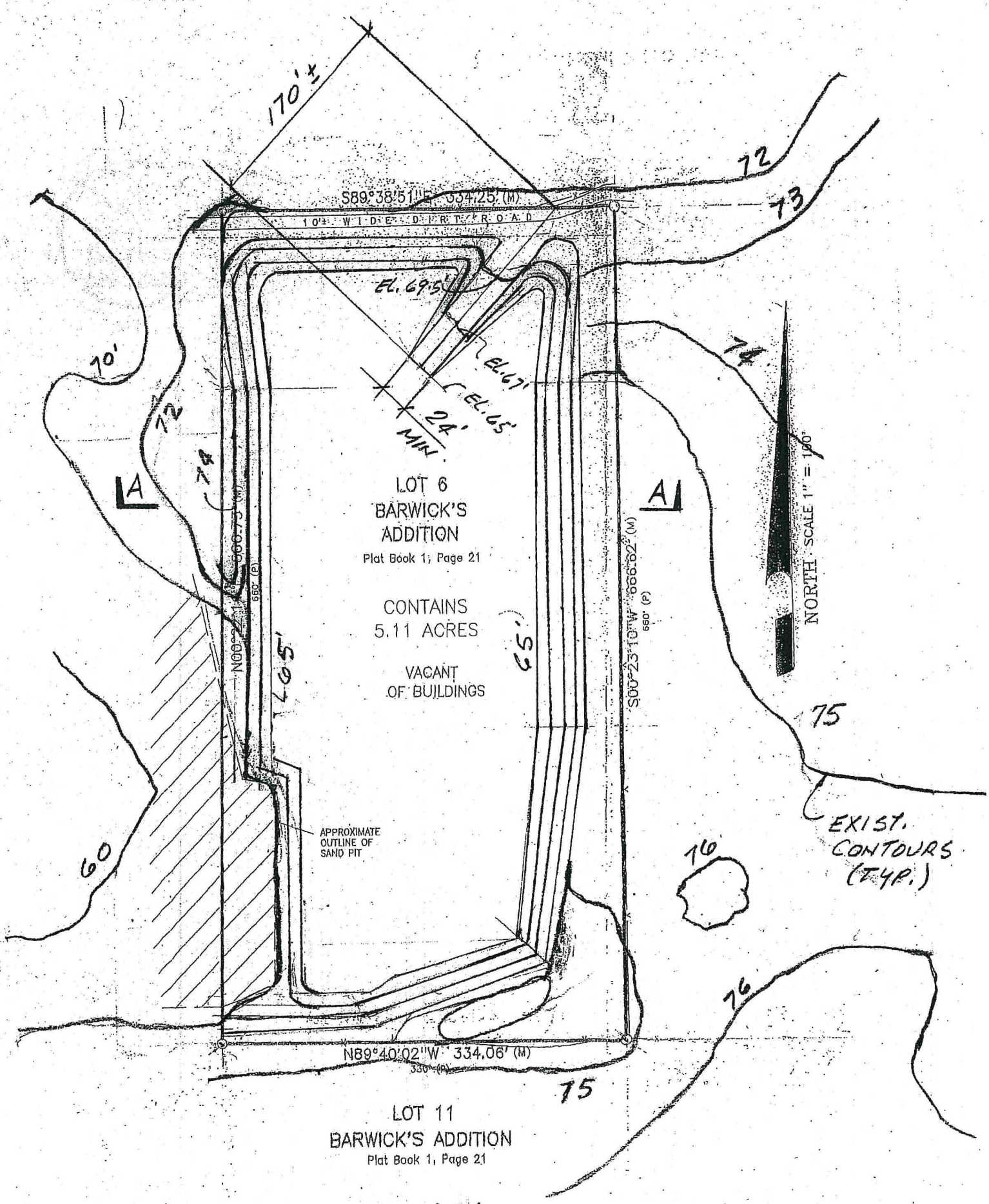
170'±
S89°38'51"E 334.25' (M)
10' WIDE DIRT ROAD
72
73
74
75
76
70'
60
EL. 69.5'
EL. 67'
EL. 65'
24' MIN.
A
A
LOT 6
BARWICK'S
ADDITION
Plat Book 1; Page 21
CONTAINS
5.11 ACRES
VACANT
OF BUILDINGS
N00°23'10"W 666.62' (M)
660' (P)
S00°23'10"W 666.62' (M)
660' (P)
165'
65'
NORTH SCALE 1" = 100'
APPROXIMATE
OUTLINE OF
SAND PIT
EXIST.
CONTOURS
(TYP.)
N89°40'02"W 334.06' (M)
330' (P)
LOT 11
BARWICK'S ADDITION
Plat Book 1, Page 21

PLAN

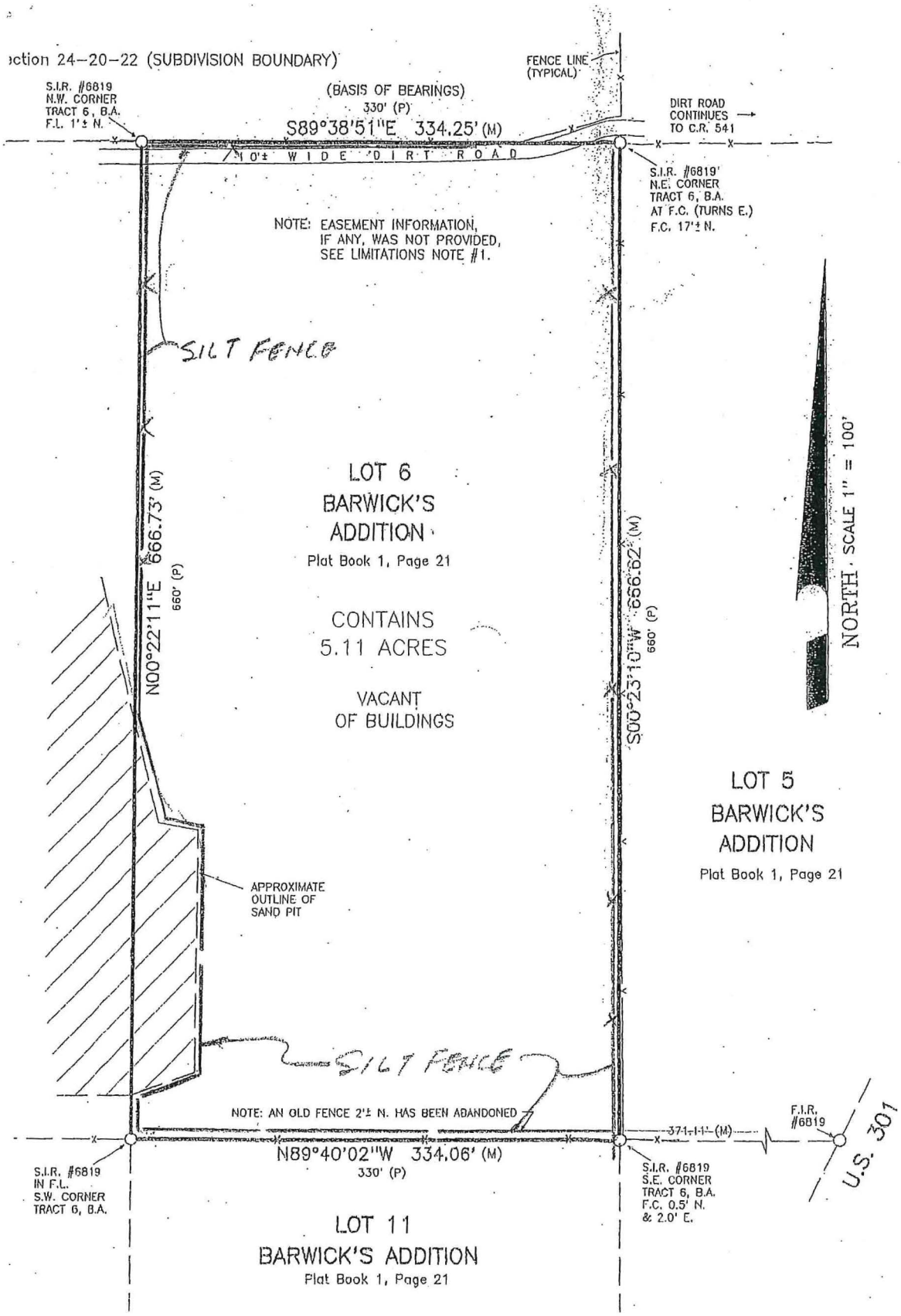

THE OWNER OR AGENT IS AWARE OF AND MUST ASSURE MAIN
PROTECTION THAT IS ASSOCIATED WITH THE PROJECT DURING

SIGNATURE OF OWNER/AGENT
(DESIGN ENGINEER SIGNATURE AND SEAL IS LOCATED IN THE

PLANNING AND ZONING SPECIAL MASTER
May 4, 2020

BOARD OF SUMTER COUNTY COMMISSIONERS
May 12, 2020

CASE NO.:	S2020-0001
APPLICANT:	James Gough for Tommy's Hauling
REQUESTED ACTION:	Renew and modifying a major special use permit for a sand excavation and hauling business.
LEGAL DESCRIPTION:	LOT 6 BARWICK'S ADDITION; PB 1, PG 21
PARCEL NUMBER:	J24A009
EXISTING ZONING:	RR5C
EXISTING USE:	Sand borrow pit and hauling business
FUTURE LAND USE:	Agriculture
PARCEL SIZE:	Five acres
GENERAL LOCATION:	Sumterville area

SURROUNDING LAND USE:	**SURROUNDING ZONING:**
NORTH: Rural Residential	**NORTH:** RR5C –Borrow pit/hauling business
SOUTH: Agriculture	**SOUTH:** RR5C – Rural homesite
EAST: Agriculture	**EAST:** RR2C& RR2– Rural homesite
WEST: Agriculture	**WEST:** A10C – Borrow pit/hauling business

CASE SUMMARY:

The subject property is located at the western terminus of CR 526 (Map). The applicant is requesting the renewal and modification of a major special use permit (SUP) to allow sand excavation and reclamation of the existing borrow pit. The borrow pit has been played out and the applicant is asking to be able to refill the pit with clean fill, sand, clay and rock. The fill material will be deposited along the edges of the borrow pit, working toward the center.

The existing sand hauling business is a vested sand operation with a valid special use permit for sand excavation (S2015-0003). Special Use Permit S2015-0003 expired on April 14, 2020. Due to the COVID 19 crises, the renewal process has been delayed. The applicant filed application

for this special use permit renewal in a timely manner and has been cooperative in the rescheduling process. There are no active code compliance cases associated with this business.

The applicant provided an engineered site plan as part of S2015-0003 (attachment). The engineered site plan addresses reclamation.

CASE ANALYSIS:

Pursuant to Section 13-332, Sumter County Land Development Code, the proposed special use must meet the following requirements for approval (Staff's review of each of the findings is provided in *italic text*):

a. The use must be in harmony with the purpose and intent of this chapter.
   The Land Development code permits excavation as an industrial use, in the RR5C zoning district with a special use permit (Table 13-431, Principal uses). The sand excavation and hauling business has maintained the required special use permit.
b. The use must be compatible with surrounding existing and anticipated uses.
   The facility meets the required land use and zoning requirements and was previously permitted for operation.
c. The use must not adversely affect the public interest. Adequate traffic circulation, sanitary, utility, drainage, refuse management, emergency services and similar necessary facilities and services shall be available for the use. A use shall not create hazardous vehicular or pedestrian traffic conditions, or parking congestion, or generate traffic that exceeds the capability of roads and streets serving the use, or otherwise affect public safety.
   Renewal of the special use permit will not adversely affect the public interest. Allowing the landowner to fill the existing pit will not create a hazard or adverse impact to the public.
d. The site must be suitable for the proposed use, considering flood hazard, drainage, soils, and other conditions which may pose a danger to life, health or property.
   The proposed permit extension and filling activity will not pose a danger to life, health or property. It is an existing sand excavation facility with no wetlands, flood zone land, or ongoing drainage problems.
e. The development of the use shall have no more than a minimal adverse effect on the environment, public health, safety, and welfare.
   The proposed permit extension and filling activity will not pose an adverse effect on the environmental, public health, safety or public welfare.
f. Proposed improvements and the level of cooperation by the developer shall be considered.
   The applicant is not proposing any new improvements. They have been very cooperative in developing the application and in rescheduling the request due to the COVID-19 state of emergency.
g. Unless specifically provided otherwise, the use shall comply with this code.

The request complies with the Land Development code. Conditions of approval have been carried forward from S2015-0003..

The following additional requirements must be considered in reviewing special uses (Sec 13-232(2)).

a. The use must not be detrimental to the neighborhood environment or unduly infringe on the rights of surrounding property owners.

   The continued use of this facility will not unduly infringe on the rights of surrounding property owners. .

b. A vehicular parking or traffic problem must not be created, and the vehicular average daily traffic created on local roads must not be increased in such a manner as to degrade the established function of the roadway or create hazards to public health or safety. The commission and staff may rely on input from the Florida Department of Transportation, the Florida Highway Patrol and the sheriff's office in making this determination.

   Trucks will continue using CR 526 to access US 301.

c. Screening and buffering sufficient to minimize interference with the enjoyment of surrounding properties may be required.

   Additional screening and buffers are not required.

DEVELOPMENT SERVICES DEPARTMENT STAFF CONCLUSIONS:

Staff finds the application sufficient and in compliance with the minimum requirements of the Sumter County Land Development Code subject to the following conditions:

1) This special use permit allows the operation of sand excavation facility and the restoration of the existing borrow pit with clean fill material and rock.
2) This Special Use Permit shall be valid through May 12, 2025.
3) Site excavation and reclamation shall follow the engineered plan provided with S2015-0003 (Attachment).
   a) The borrow pit shall be filled with common fill, consisting of granular soil free of organic matter and stones. Layers of fill shall be compacted as provided in the engineered plans.
   b) The east property line shall be planted with a tree line as shown in the engineered plans. Existing trees along the east property line shall be retained and credited as part of the required tree line.

4) Any change in ownership of the subject property shall be reported to the County within 30 days. Conditions of this special use permit are binding on all future property owners or excavators.
5) Outdoor hours of operation shall be limited to Monday through Friday, 8:00 am to 6:00 pm.
6) Truck access to the facility shall be by CR 526.
7) County personnel shall be allowed to access the site during normal business hours to perform unscheduled monitoring inspections;
8) Suspension, expiration, or revocation of any other agency permit shall result in the immediate suspension, expiration, or revocation of this special use permit;

9) This special use permit may be suspended or revoked by the Board of County Commissioners consistent with Section 13-333(e), Sumter County Land Development Code.

Notices Sent: 18 (No Objection) 0 (Objection) 0

Location Map

ATTACHMENT

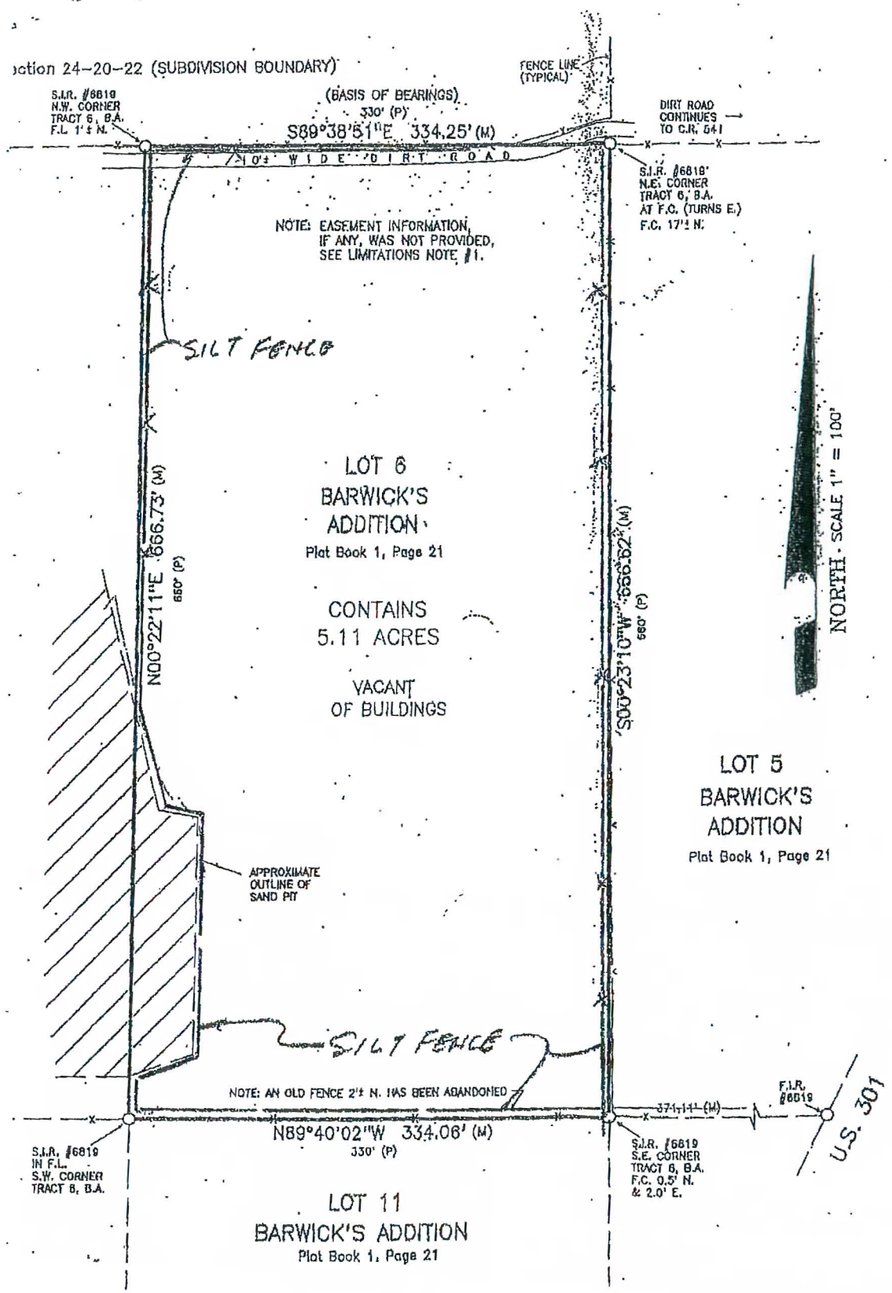

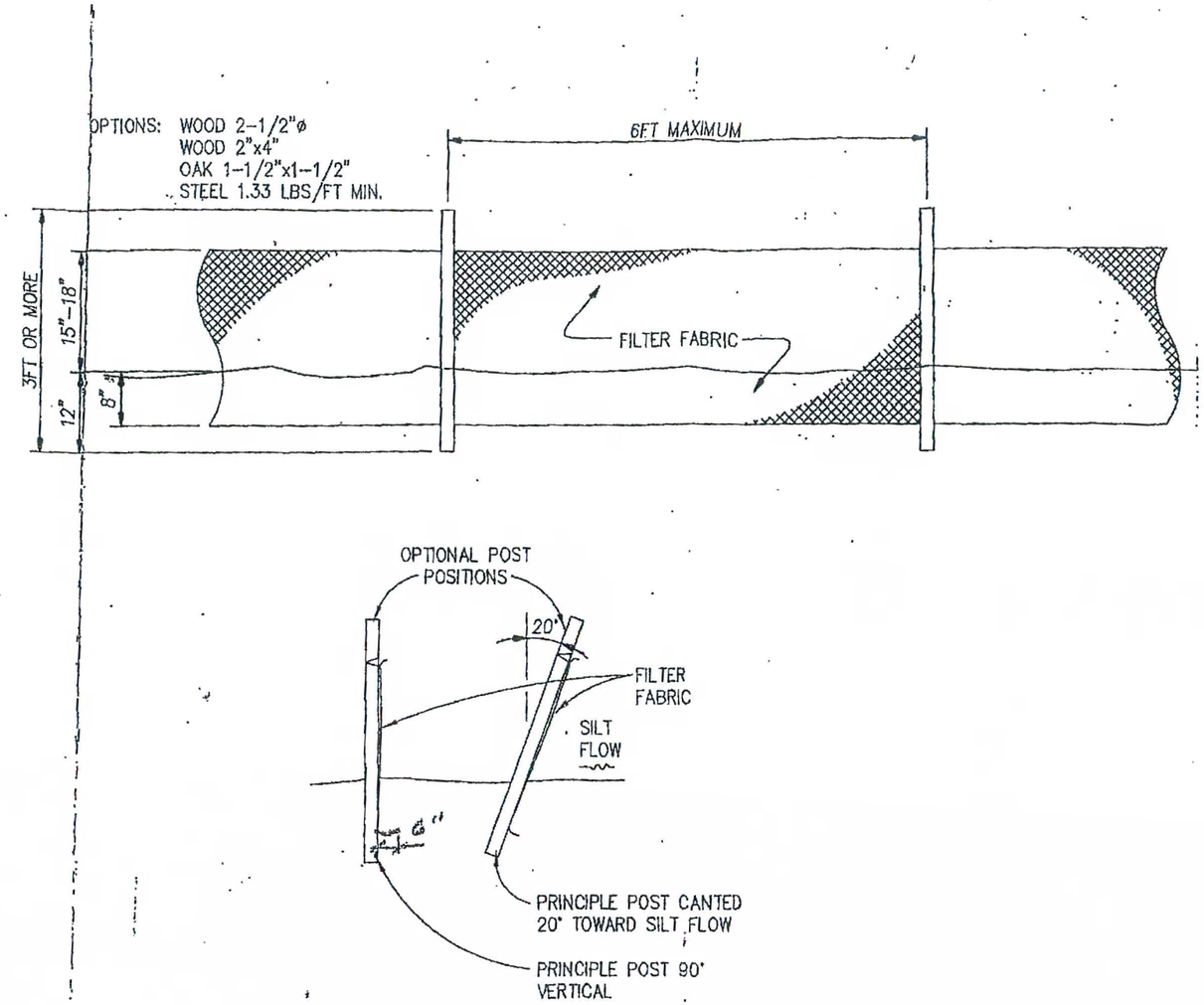

Type III Silt Fence

SCALE: NTS

Michael A. Robinson, P. E.

MICHAEL A. ROBINSON LICENSED STATE OF FLORIDA PROFESSIONAL ENGINEER

2-18-15

Florida Registration No. 28317

MICHAEL A. ROBINSON, P.E.
(Rusty)
STRUCTURAL ENGINEERING, INC.
INDUSTRIAL, COMMERCIAL, and RESIDENTIAL
921 SHADOW DR., STE. 3
LAKELAND, FLORIDA 33809
OFFICE (863) 815-9541
FAX (863) 858-9861

SCALE: AS NOTED

TOMMY'S HAULING
BORROW PIT
SUMTERVILLE, FL

DRAWN BY: MAR CHECKED: MAR DATE: 2-18-15	DRAWING NUMBER	REVISION
	C-1	0

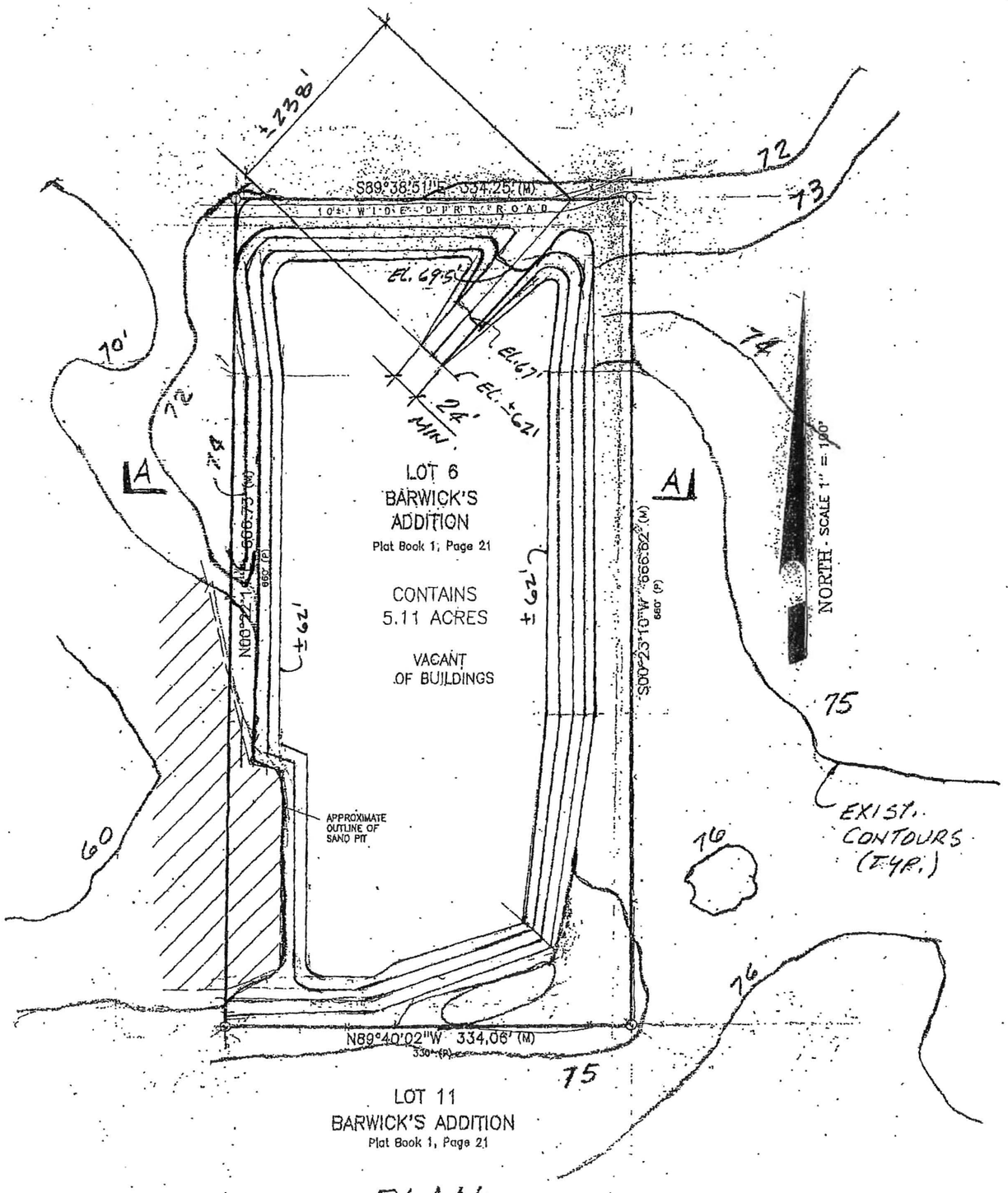

PLAN

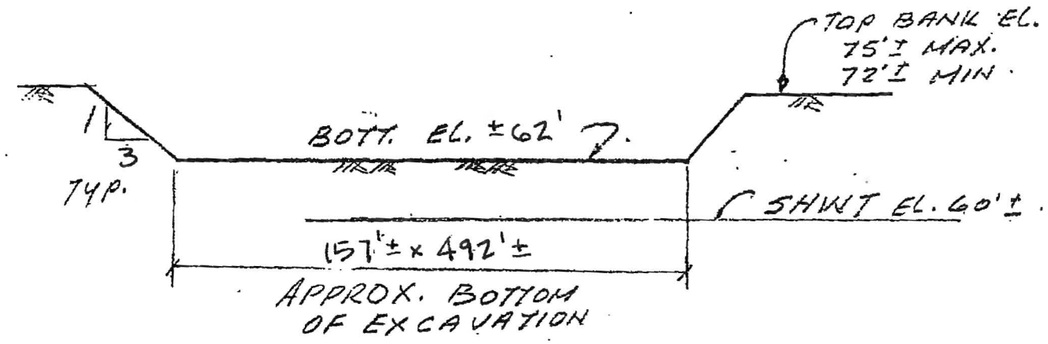

SECTION A-A
N.T.S.

Michael A. Robinson, P.E.
MICHAEL A. ROBINSON
LICENSE
No. 28
2-18-15
STATE OF
FLORIDA
PROFESSIONAL ENGINEER
Florida Registration
No. 28417

MICHAEL A. ROBINSON, P.E.
(Rusty)
STRUCTURAL ENGINEERING, INC.
INDUSTRIAL, COMMERCIAL, and RESIDENTIAL
921 SHADOW DR., STE. 3
LAKELAND, FLORIDA 33809
OFFICE (863) 815-9541
FAX (863) 858-9861

SCALE: AS NOTED

TOMMY'S HAULING
BORROW PIT
SUMTERVILLE, FL

DRAWN BY: MAR CHECKED: MAR DATE: 2-18-15	DRAWING NUMBER C-2	REVISION 0

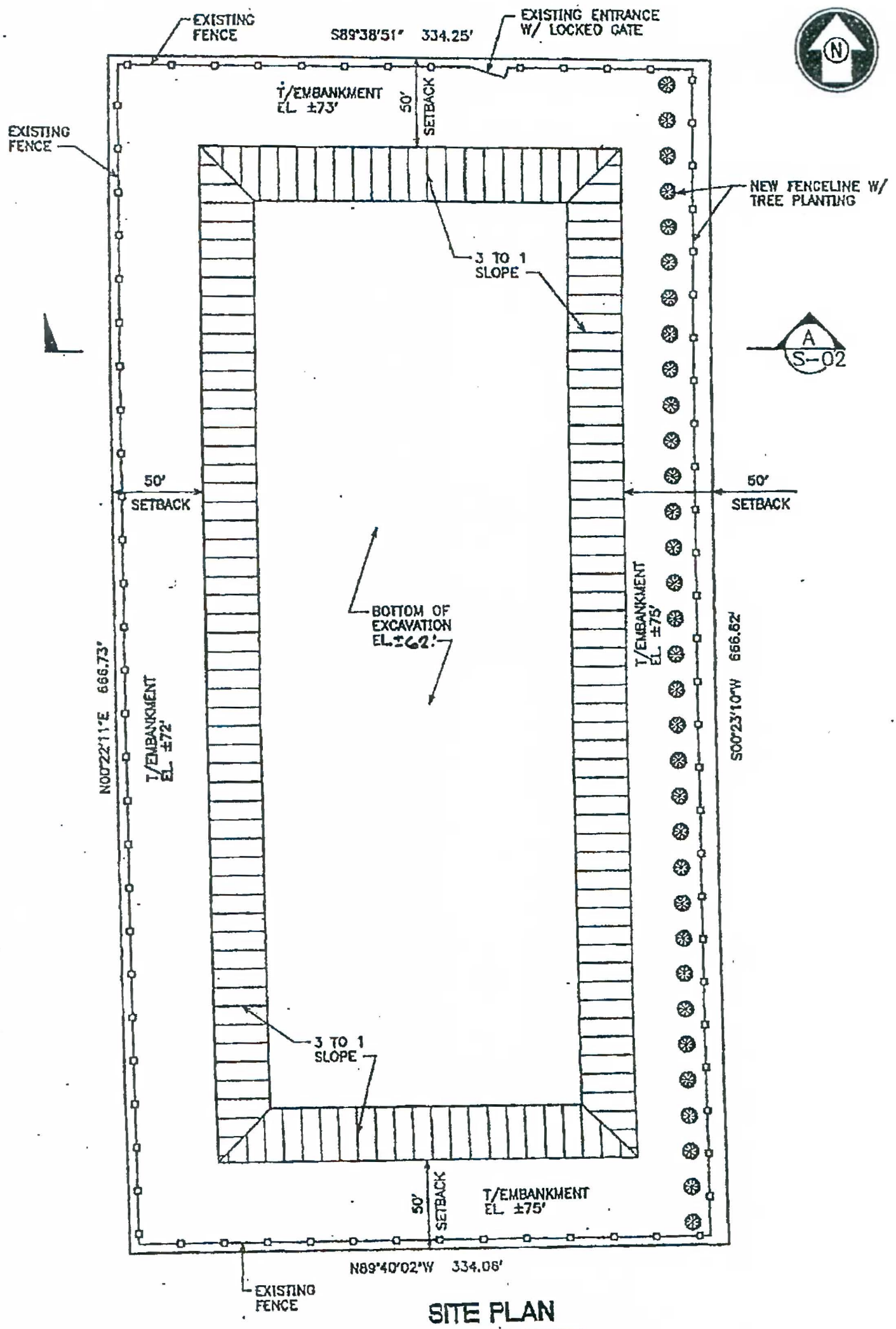

SITE PLAN

SCALE: 1"=50'

NOTES:

1. DEMOLITION TO CONFORM W/ 2010 FLORIDA BUILDING CODE.

Michael A. Robinson, P. E.
Florida Registration No. 28317

MICHAEL A. ROBINSON, P.E.
(Rusty)
STRUCTURAL ENGINEERING, INC.
INDUSTRIAL, COMMERCIAL, and RESIDENTIAL
921 SHADOW DR., STE. 3
LAKELAND, FLORIDA 33809
OFFICE (863) 815-9541
FAX (863) 858-9861

SCALE: AS NOTED

TOMMY'S HAULING
BORROW PIT
SUMTERVILLE, FL

DRAWN BY: MAR	DRAWING NUMBER	REVISION
CHECKED: MAR	S-1	0
DATE: 2-18-15		

RECLAMATION PLAN:

UPON COMPLETION, EXCAVATION SHALL BE RECLAIMED SO AS TO PERMIT USE OF THE LAND IN CONFORMITY WITH THE EXISTING LAND USE ZONE AND USAGE OF THE SURROUNDING AREA AS FOLLOWS:

BORROW PIT TO BE FILLED IN WITH COMMON FILL AS DEFINED BELOW.

COMMON FILL SHOULD CONSIST OF GRANULAR SOIL FREE OF ORGANIC MATERIAL, TOPSOIL, DEBRIS, FROZEN SOIL, OR OTHER DELETERIOUS MATERIAL THAT CANNOT BE PROPERLY COMPACTED. COMMON FILL SHOULD CONTAIN STONES NO LARGER THAN 6 INCHES AND SHOULD HAVE NO MORE THAN 35 PERCENT OF MATERIAL PASSING THE No. 200 SIEVE. COMMON FILL SHOULD BE PLACED IN LAYERS NOT TO EXCEED 12 INCHES, AS PLACED, AND COMPACTED WITH SUITABLE VIBRATORY COMPACTION EQUIPMENT TO AT LEAST 92 PERCENT OF MAXIMUM DRY DENSITY AS DETERMINED BY ASTM D1557.

EXISTING EXCAVATION DETAILS

1. DEPTH OF EXISTING EXCAVATION VARIES FROM ±10' TO ±23'
2. NO LIMEROCK HAS BEEN DETECTED DOWN TO ±20' BELOW TOP OF EMBANKMENT.
3. SEASONAL HIGH WATER TABLE (SHWT) EL. ±60', BUT NO WATER HAS BEEN DETECTED DOWN TO EL. ±55'.
4. AREA OF EXISTING EXCAVATION ±135,000 SQ. FT (±3.1 ACRES).
5. VOLUME OF EXISTING EXCAVATION 42,000 C.Y.
6. ±55,000 C.Y. ALLOWED BY SWFWMD PERMIT, THEREFORE ±13,000 C.Y. ALLOWED FOR FUTURE EXCAVATION.

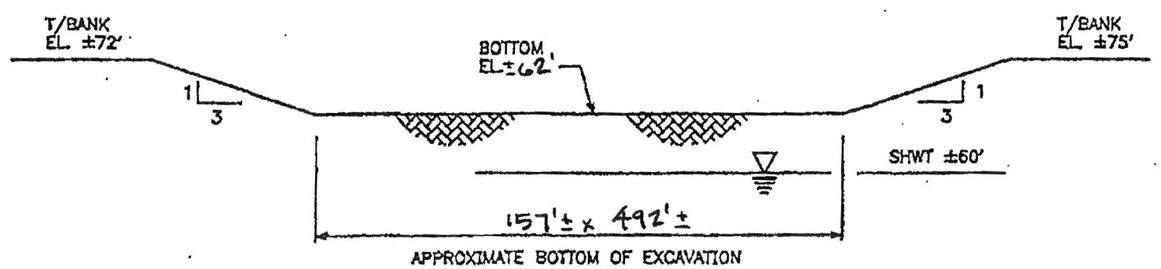

SECTION A / S-01

NOT TO SCALE

Michael A. Robinson, P. E.
MICHAEL A. ROBINSON
LICENSED
No. 28317
2/18/15
STATE OF FLORIDA
PROFESSIONAL ENGINEER
Florida Registration No. 28317

MICHAEL A. ROBINSON, P.E.
(Rusty)
STRUCTURAL ENGINEERING, INC.
INDUSTRIAL, COMMERCIAL, and RESIDENTIAL
921 SHADOW DR., STE. 3
LAKELAND, FLORIDA 33809
OFFICE (863) 815-9541
FAX (863) 858-9861

SCALE: AS NOTED

TOMMY'S HAULING
BORROW PIT
SUMTERVILLE, FL

DRAWN BY: MAR CHECKED: MAR DATE: 2-18-15	DRAWING NUMBER	REVISION
	S-2	0

PROCLAMATION

EMERGENCY MEDICAL SERVICES (EMS) WEEK

WHEREAS, emergency medical services is a vital public service; and

WHEREAS, the dedicated EMT's and Paramedics of American Medical Response Ambulance have been partnering with Sumter County Fire and Emergency Medical Services (EMS) and The Villages Public Safety to provide exemplary emergency medical care and ambulance transportation to the citizens of Sumter County; and

WHEREAS, Sumter County Fire and EMS, The Villages Public Safety and American Medical Response Ambulance are ready to provide lifesaving care to those in need 24 hours a day, seven days a week; and

WHEREAS, access to quality emergency care dramatically improves the survival and recovery rate of those who experience sudden illness or injury; and

WHEREAS, the emergency medical services system consists of emergency medical technicians, paramedics, firefighters, emergency physicians, emergency nurses, educators, administrators, and others; and

WHEREAS, the members of emergency medical services teams, whether career or volunteer, engage in thousands of hours of specialized training and continuing education to enhance their lifesaving skills; and

WHEREAS, it is appropriate to recognize the value and the accomplishments of emergency medical services providers by designating Emergency Medical Services Week; and

NOW, THEREFORE, the Board of County Commissioners of Sumter County, Florida hereby proclaims:

The Week of May 17-23, 2020, as:

EMERGENCY MEDICAL SERVICES (EMS) WEEK

DONE AND PROCLAIMED this 12th day of May 2020, Sumter County, Florida.

Attest:

BOARD OF COUNTY COMMISSIONERS
SUMTER COUNTY

_____

Caroline Alrestimawi
Deputy Clerk

_____

Steve Printz
Chairman

PROCLAMATION

NATIONAL PUBLIC WORKS WEEK

WHEREAS, Public Works services provided in our County are an integral part of our citizens' everyday lives; and

WHEREAS, during emergencies, such as COVID 19 and Hurricanes, Public Works remains an essential service with its dedicated employees working while others remain safe in their homes, and

WHEREAS, Public Works focuses on providing the most effective and efficient operations that are critical for our community such as maintenance and construction of roads, traffic management, parks, stormwater, facilities construction and maintenance, and solid waste; and

WHEREAS, the health, safety, and comfort of this County depend on these facilities and services; and

WHEREAS, the American Public Works Association (APWA) recognized Sumter County Public Works Department as one of only 155 accredited agencies out of over 19,400 public works departments in the U.S. and recently approved the reaccreditation of the department; and

WHEREAS, the year 2020 marks the 60th annual National Public Works Week sponsored by the American Public Works Association/Canadian Public Works Association.

NOW, THEREFORE, the Board of County Commissioners of Sumter County, Florida hereby proclaims:

The Week of May 17-23, 2020, as:

NATIONAL PUBLIC WORKS WEEK

DONE AND PROCLAIMED this 12th day of May 2020, Sumter County, Florida.

Attest:

BOARD OF COUNTY COMMISSIONERS
SUMTER COUNTY

_____

Caroline Alrestimawi
Deputy Clerk

_____

Steve Printz
Chairman

PROCLAMATION

DRUG COURT MONTH

WHEREAS, substance abuse is a major societal problem throughout the nation; and

WHEREAS, the National Association of Drug Court Professionals proclaimed May as National Drug Court Month; and

WHEREAS, the Sumter County Drug Court, from its inception on October 16th, 2007, graduated over seventy-three (73) clients, and made substance abuse treatment available to clients of Sumter County; and

WHEREAS, the Sumter County Drug Court provides focus and leadership for criminal justice treatment, education, and other community partners in the fight against drugs and criminality; and

WHEREAS, the Sumter County Drug Court programs combine intensive judicial supervision, mandatory substance abuse treatment, drug testing and escalating sanctions and incentives to break the cycle of drug addiction and its associated crimes; and

WHEREAS, the Drug Court movement in the United States now has over 3,000 programs since its inception in 1989;

NOW AND THEREFORE, BE IT PROCLAIMED by the Board of County Commissioners of Sumter County, Florida that the month of May, is hereby designated as

"DRUG COURT MONTH"

in Sumter County, Florida, and the Board urges all citizens to recognize the practitioners and participants of the Sumter County Drug Court and their significant contributions to reducing drug use and its associated crime.

DONE AND PROCLAIMED this 12th day of May 2020.

ATTEST:

BOARD OF COUNTY COMMISSIONERS
SUMTER COUNTY, FLORIDA

_____

Caroline AlRestimawi,
Deputy Clerk

_____

Steve Printz, Chairman

PROCLAMATION

MOTORCYCLE SAFETY AWARENESS MONTH

WHEREAS, Florida's climate and scenery make motorcycle riding an attraction in the Sunshine State, and riders consider our roadways to be some of the nation's best for riding; and

WHEREAS, motorcycles are increasingly used as a regular means of transportation; and

WHEREAS, the motorcycle is an important form of transportation for commuting, touring and recreation; and

WHEREAS, as a matter of safety, it is necessary to develop appropriate driving habits to handle these vehicles on Florida roadways; and

WHEREAS, more than 1,000,000 drivers in Florida have a motorcycle endorsement on their driver license; and

WHEREAS, to prevent injuries and deaths on Florida's roadways, motorcyclists and motorists must be vigilant in their efforts to share the road and ensure the safety of everyone; and

WHEREAS, Motorcycle Safety Awareness Month raises public awareness for a lifetime of safe motorcycle riding;

NOW, THEREFORE, the Board of County Commissioners of Sumter County, Florida hereby proclaims:

The Month of May 2020, as:

MOTORCYCLE SAFETY AWARENESS MONTH

DONE AND PROCLAIMED this 12TH day of May 2020, Sumter County, Florida.

Attest:

BOARD OF COUNTY COMMISSIONERS
SUMTER COUNTY

_____

Caroline Alrestimawi
Deputy Clerk

_____

Steve Printz
Chairman

Sumter County, Florida

Audit Report

September 30, 2019

CRI CARR RIGGS & INGRAM
CPAs and Advisors
CRIcpa.com

Table of Contents
September 30, 2019

	Page
Independent Auditors' Report	1
Management's Discussion and Analysis	4
Basic Financial Statements	
Government-wide Financial Statements:	
Statement of Net Position	13
Statement of Activities	14
Governmental Fund Financial Statements:	
Balance Sheet	15
Reconciliation of the Balance Sheet to the Statement of Net Position	16
Statement of Revenues, Expenditures and Changes in Fund Balances	17
Reconciliation of the Statement of Revenues, Expenditures and Changes in Fund Balances to the Statement of Activities	18
Proprietary Fund Financial Statements:	
Statement of Net Position	19
Statement of Revenues, Expenses and Changes in Fund Net Position	20
Statement of Cash Flows	21
Fiduciary Fund Financial Statements:	
Statement of Fiduciary Net Position – Agency Funds	22
Notes to Financial Statements	23

Table of Contents
September 30, 2019

Required Supplementary Information

Schedule of Revenues, Expenditures and Changes in Fund Balances-
Budget and Actual - General Fund 47

Schedule of Revenues, Expenditures and Changes in Fund Balances-
Budget and Actual – SHIP Fund 48

Schedule of Revenues, Expenditures and Changes in Fund Balances-
Budget and Actual – Building Services Fund 49

Other Postemployment Benefits:

Schedule of Changes in the County's Total OPEB Liability and Related Ratios 50

Florida Retirement System:

Schedule of County's Proportionate Share of the Net Pension Liability,
Schedule of County's Contributions 51

Florida Retirement System Health Insurance Subsidy, Defined Benefit Plan:

Schedule of County's Proportionate Share of the Net Pension Liability,
Schedule of County's Contributions 52

Supplementary Information

Description of General Fund by Category 53

Combining Balance Sheet - Board and Officers General Funds 54

Combining Schedule of Revenues, Expenditures and Changes in
Fund Balances - Budget and Actual - Board and Officers General Funds 56

Description of Nonmajor Governmental Funds 61

Combining Balance Sheet - Nonmajor Governmental Funds 63

Combining Statement of Revenues, Expenditures and Changes in
Fund Balances - Nonmajor Governmental Funds 69

Table of Contents
September 30, 2019

Schedule of Revenues, Expenditures and Changes in Fund Balances
Budget and Actual – Nonmajor Governmental Funds:

Small Grants Fund 75

Law Enforcement Trust Fund 76

Road Impact Fee Fund 77

911 Emergency Telephone System Fund 78

Anti-Drug Abuse Fund 79

County Transit Fund 80

Boating Improvement Fund 81

Police Education Fund 82

Alcohol and Drug Abuse Fund 83

Court Improvement Fund 84

Secondary Trust Fund 85

Crime Prevention Fund 86

County Transportation Trust Fund 87

Court Local Requirements Fund 88

Court Technology Fund 89

Tourist Development Fund 90

Sheriff Inmate Welfare Fund 91

Clerk Records Modernization Fund 92

Clerk Fine and Forfeiture Fund 93

Clerk Court Technology Fund 94

Debt Service Fund 95

Table of Contents
September 30, 2019

2018 Bond Construction Fund 96

Combining Statement of Fiduciary Net Position – Agency Funds 97

Combining Statement of Changes in Assets and Liabilities - Agency Funds 98

Schedule of Expenditures of Federal Awards
and State Financial Assistance 99

Notes to Schedule of Expenditures of Federal Awards
and State Financial Assistance 101

Additional Elements Required by the Rules of the Auditor General

Management Letter 102

Independent Accountants' Report on Compliance
with Section 218.415, Florida Statutes 104

Independent Accountants' Report on Compliance
with Sections 365.172(10) and 365.173(2)(d), Florida Statutes 105

Independent Auditors' Report on Internal Control over Financial Reporting
and on Compliance and Other Matters Based on an Audit of Financial Statements
Performed in Accordance with Government Auditing Standards 106

Independent Auditors' Report on Compliance for Each Major Federal Program
and State Project and on Internal Control Over Compliance Required by the
Uniform Guidance and Chapter 10.550, Rules of the Auditor General 108

Schedule of Findings and Questioned Costs 110

Management's Follow-up of Audit Findings:
Summary Schedule of Prior Audit Findings Relative to Financial Assistance 112
Corrective Action Plan --

FINANCIAL SECTION

Board of County Commissioners

Sumter County

Est. 1853

REPORT OF THE INDEPENDENT AUDITORS

CRI CARR RIGGS & INGRAM
CPAs and Advisors

Carr, Riggs & Ingram, LLC
4010 N.W. 25th Place
Gainesville, Florida 32606
P.O. Box 13494
Gainesville, Florida 32604

(352) 372-6300
(352) 375-1583 (fax)
www.cricpa.com

INDEPENDENT AUDITORS' REPORT

The Honorable County Commissioners
Sumter County, Florida

Report on the Financial Statements

We have audited the accompanying financial statements of the governmental activities, each major fund, and the aggregate remaining fund information of Sumter County, Florida (the "County") as of and for the year ended September 30, 2019, and the related notes to the financial statements, which collectively comprise the County's basic financial statements as listed in the table of contents.

Management's Responsibility for the Financial Statements

Management is responsible for the preparation and fair presentation of these financial statements in accordance with accounting principles generally accepted in the United States of America; this includes the design, implementation, and maintenance of internal control relevant to the preparation and fair presentation of financial statements that are free from material misstatement, whether due to fraud or error.

Auditors' Responsibility

Our responsibility is to express opinions on these financial statements based on our audit. We conducted our audit in accordance with auditing standards generally accepted in the United States of America and the standards applicable to financial audits contained in *Government Auditing Standards,* issued by the Comptroller General of the United States. Those standards require that we plan and perform the audit to obtain reasonable assurance about whether the financial statements are free from material misstatement.

An audit involves performing procedures to obtain audit evidence about the amounts and disclosures in the financial statements. The procedures selected depend on the auditors' judgment, including the assessment of the risks of material misstatement of the financial statements, whether due to fraud or error. In making those risk assessments, the auditor considers internal control relevant to the entity's preparation and fair presentation of the financial statements in order to design audit procedures that are appropriate in the circumstances, but not for the purpose of expressing an opinion on the effectiveness of the entity's internal control. Accordingly, we express no such opinion. An audit also includes evaluating the appropriateness of accounting policies used and the reasonableness of significant accounting estimates made by management, as well as evaluating the overall presentation of the financial statements.

We believe that the audit evidence we have obtained is sufficient and appropriate to provide a basis for our audit opinions.

Opinions

In our opinion, the financial statements referred to above present fairly, in all material respects, the respective financial position of the governmental activities, each major fund, and the aggregate remaining fund information of the County, as of September 30, 2019, and the respective changes in financial position and cash flows, where applicable, thereof for the year then ended in accordance with accounting principles generally accepted in the United States of America.

Emphasis of Matter – Restatements

As described in Note 15 to the financial statements, the County changed its year of measurement for reporting its total OPEB liability, which resulted in a restatement to the September 30, 2018 net position of governmental activities. The County also made a prior period adjustment to the September 30, 2018 net position of governmental activities to correct capital assets, net of depreciation. Our opinions are not modified with respect to this matter.

Other Matters

Required Supplementary Information

Accounting principles generally accepted in the United States of America require that the management's discussion and analysis and schedules listed in the table of contents as "required supplementary information" be presented to supplement the basic financial statements. Such information, although not a part of the basic financial statements, is required by the Governmental Accounting Standards Board, who considers it to be an essential part of financial reporting for placing the basic financial statements in an appropriate operational, economic, or historical context. We have applied certain limited procedures to the required supplementary information in accordance with auditing standards generally accepted in the United States of America, which consisted of inquiries of management about the methods of preparing the information and comparing the information for consistency with management's responses to our inquiries, the basic financial statements, and other knowledge we obtained during our audit of the basic financial statements. We do not express an opinion or provide any assurance on the information because the limited procedures do not provide us with sufficient evidence to express an opinion or provide any assurance.

Other Information

Our audit was conducted for the purpose of forming opinions on the financial statements that collectively comprise the County's basic financial statements. The combining and individual nonmajor fund financial statements and schedules are presented for purposes of additional analysis and are not a required part of the basic financial statements. The schedule of expenditures of federal awards and state financial assistance is presented for purposes of additional analysis as required by Title 2 U.S Code of Federal Regulations Part 200, *Uniform Administrative Requirements, Cost Principles, and Audit Requirements for Federal Awards* (Uniform Guidance) and Chapter 10.550, Rules of the Auditor General, and is also not a required part of the basic financial statements.

The combining and individual nonmajor fund financial statements and schedules and the schedule of expenditures of federal awards and state financial assistance are the responsibility of management and were derived from and relate directly to the underlying accounting and other records used to prepare the basic financial statements. Such information has been subjected to the auditing procedures applied in the audit of the basic financial statements and certain additional procedures, including comparing and reconciling such information directly to the underlying accounting and other records used to prepare

the basic financial statements or to the basic financial statements themselves, and other additional procedures in accordance with auditing standards generally accepted in the United States of America. In our opinion, the combining and individual nonmajor fund financial statements and schedules and the schedule of expenditures of federal awards and state financial assistance are fairly stated in all material respects in relation to the basic financial statements as a whole.

Other Reporting Required by *Government Auditing Standards*

In accordance with *Government Auditing Standards,* we have also issued our report dated April 6, 2020, on our consideration of the County's internal control over financial reporting and on our tests of its compliance with certain provisions of laws, regulations, contracts, and grant agreements and other matters. The purpose of that report is solely to describe the scope of our testing of internal control over financial reporting and compliance and the results of that testing, and not to provide an opinion on the effectiveness of the County's internal control over financial reporting or on compliance. That report is an integral part of an audit performed in accordance with Government Auditing Standards in considering the County's internal control over financial reporting and compliance.

Carr, Riggs & Ingram, L.L.C.

Gainesville, Florida
April 6, 2020

MANAGEMENT'S DISCUSSION AND ANALYSIS

This Management's Discussion and Analysis report provides the reader with a narrative overview and analysis of the financial activities of the County for the fiscal year ended September 30, 2019. The analysis provides summary financial information for the County and should be read in conjunction with the County's financial statements. The financial reporting model and the financial statements associated with it are described in the following narrative as well as the Notes to Financial Statements.

FINANCIAL HIGHLIGHTS

Key financial highlights for the 2018 – 2019 fiscal year is as follows:

- Sumter County's assets and deferred outflows exceeded its liabilities and deferred inflows at September 30, 2019, by $273,148,967 (*net position*). Of this amount, $287,166,084 is invested in capital assets and $20,439,772 is restricted by law, grant agreements, debt covenants, contributors, or enabling legislation. The County's unrestricted net position is negative $34,456,892.

- The County's total net position was relatively flat with a decrease of $774,535 from 2018.

- The County's long-term liabilities increased from $169,262,750 to $180,922,141. This increase is primarily due to the County incurring $6.4 million in The Villages® road construction agreement, the Florida Retirement System liability increase of $9.1 million and the County's total Other Post Employee Benefits (OPEB) liability increase of $1.6 million. The offsets to the increase were the County's normal debt service payments.

- The General Fund reported a fund balance at September 30, 2019 of $30,531,517 or 31% of expenditures and transfers out.

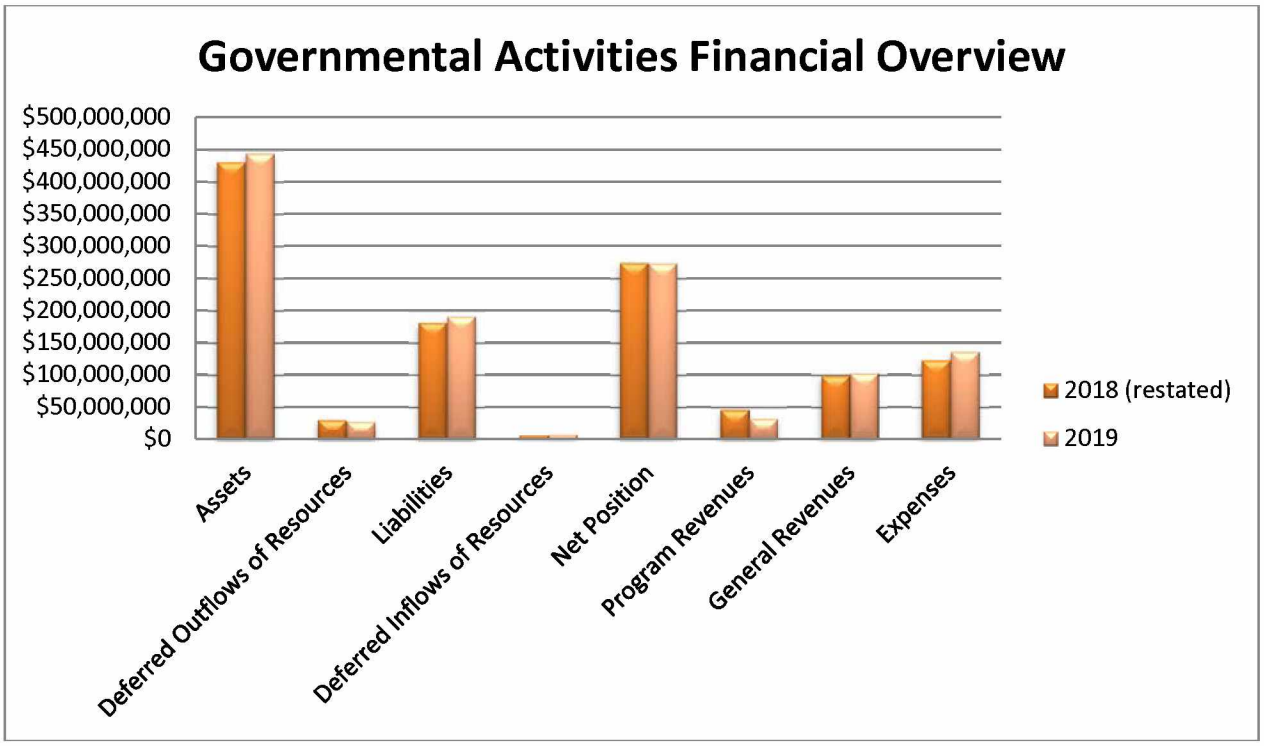

OVERVIEW OF THE FINANCIAL STATEMENTS

The discussion and analysis are intended to serve as introduction to the County's basic financial statements. The County's basic financial statements are comprised of three components:

1) Government-wide financial statements
2) Fund financial statements
3) Notes to the financial statements

The illustration below shows how the various parts of the financial section are arranged and relate to one another.

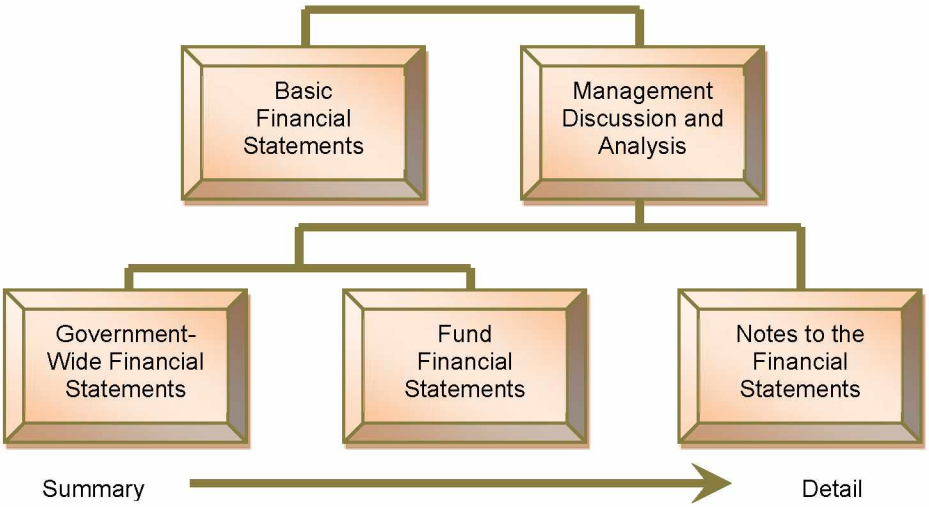

Government-wide Financial Statements

The *government-wide financial statements* are designed to provide readers with a broad overview of Sumter County's finances in a manner similar to a private-sector business.

The *statement of net position* presents information on all of Sumter County's assets, deferred outflows liabilities and deferred inflows with assets plus deferred outflows minus liabilities and deferred inflows reported as *net position.* Over time, increases or decreases in net position may serve as a useful indicator of whether the financial position of Sumter County is improving or deteriorating.

The *statement of activities* presents information showing how the County's net position changed during the most recent fiscal year. All changes in net position are reported as soon as the underlying event occurs, regardless of the timing of the related cash flows. Thus, revenues and expenses are reported in this statement for some items that will result in cash flows in future fiscal periods (e.g., uncollected taxes, accounts payable and earned but unused vacation leave).

Both of the government-wide financial statements distinguish functions of the County that are principally supported by taxes and intergovernmental revenues (*governmental activities*). The governmental activities of the County include general government, public safety, transportation, human services, culture and recreation, physical environment, economic environment and court related.

Fund Financial Statements

A fund is a grouping of related accounts that is used to maintain control over resources that are segregated for specific activities or objectives. The County, like other state and local governments, uses fund accounting to

ensure and demonstrate compliance with finance-related legal requirements. All of the funds of the County can be divided into three categories: governmental funds, proprietary funds, and fiduciary funds.

Governmental funds - Governmental funds are used to account for essentially the same functions reported as governmental activities in the government-wide financial statements. However, unlike the government-wide financial statements, governmental fund financial statements focus on near-term inflows and outflows of spendable resources, as well as on balances of spendable resources available at the end of the fiscal year. Such information may be used in evaluating a government's near-term financing requirements.

Because the focus of governmental funds is narrower than that of the government-wide financial statements, it is useful to compare the information presented for governmental funds with similar information presented for governmental activities in the government-wide financial statements. By doing so, readers may better understand the long-term impact of the government's near-term financing decisions. Both the governmental fund balance sheet and governmental fund statement of revenues, expenditures, and changes in fund balances provide a reconciliation to facilitate comparison between governmental funds and governmental activities.

Sumter County maintains 27 governmental funds for reporting purposes. Information is presented separately in the governmental fund balance sheet and in the governmental fund statement of revenues, expenditures, and changes in fund balances for the General Fund, the SHIP Fund, the Building Services Fund, and the 2018 Bond Construction (capital projects) Fund, which are considered to be major funds. Data from the other 23 governmental funds are combined into a single, aggregated presentation. Individual fund data for each of the non-major governmental funds is provided in the form of combining statements starting on page 63. The County adopts an annual appropriated budget for its general fund and all but two (the Sheriff's Victim's Advocacy Grant Fund and the Sheriff's Federal Forfeiture Fund) of its governmental funds.

Proprietary funds (Internal Service Funds and Enterprise Funds) - *Internal service funds* are an accounting device used to accumulate and allocate costs internally for a government's various functions. The County uses an internal service fund to account for its self-insured health insurance activities and it is included within governmental activities in the government-wide financial statements because it benefits governmental functions. *Enterprise funds* are used to report business-type activities. The County has no enterprise funds.

***Fiduciary* funds** – Fiduciary funds are used to account for resources held for the benefit of parties outside the government. Fiduciary funds are not reflected in the government-wide financial statements because resources of those funds are not available to support the County's own programs.

Notes to the Financial Statements
The notes provide additional information that is essential to a full understanding of the data provided on the government-wide and fund financial statements. Notes are presented on pages 23 to 46 of this report.

Other Information
In addition to the basic financial statements and accompanying notes, this report also presents certain required supplementary information consisting of budget to actual comparisons for the general fund and major special revenue funds and information pertaining to the other postemployment benefit plan and the Florida Retirement System (FRS) (pages 47 to 52). Following the required supplementary information are combining balance sheet and combining schedule of revenues, expenditures and changes in fund balances of the Board and Constitutional Officers general funds (pages 54 to 60), the combining balance sheets, and combining statement of revenues, expenditures, and changes in fund balances for the non-major governmental funds (pages 63 to 74). The individual schedules of revenue, expenditures and changes in fund balances budget to actual for the non-major governmental funds and major capital projects fund can be found on pages 75 to 96, the combining statement and statement of changes for agency funds are on pages 97 to 98, and the statistical section is on pages 99 to 122.

GOVERNMENT-WIDE FINANCIAL ANALYSIS

Net Position

Net position may serve over time as a useful indicator of a government's financial position. In the case of Sumter County, assets and deferred outflows exceeded liabilities and deferred inflows by $273,148,967 at the close of the fiscal year ended September 30, 2019.

Sumter County's Net Position		
	Governmental Activities	
	2018 (restated)	2019
Current and other assets	$ 100,898,575	$ 103,340,894
Capital assets	329,054,777	340,547,771
Total assets	429,953,352	443,888,665
Deferred outflows	30,197,181	27,355,930
Current liabilities	11,032,076	9,999,220
Long-term liabilities	169,262,750	180,922,141
Total liabilities	180,294,826	190,921,361
Deferred inflows	5,932,205	7,174,267
Net position		
Net investment in capital assets	274,973,707	287,166,084
Restricted	17,056,004	20,439,775
Unrestricted	(18,106,209)	(34,456,892)
	$ 273,923,502	$ 273,148,967

The largest portion of the County's net position reflects its investment in capital assets (e.g. land, parks, buildings, roads, and equipment) less any related outstanding debt used to acquire those assets. The County uses these capital assets to provide services to citizens; consequently these assets are not available for future spending. Although the County's investment in its capital assets is reported net of related debt, it should be noted that the resources needed to repay this debt must be provided from other sources, since the capital assets themselves cannot be used to liquidate these liabilities.

An additional portion of the County's net position represents resources that are subject to restrictions imposed externally or enabling legislation.

The remaining balance of unrestricted net position is a deficit of $34,456,892.

Changes in Net Position

The change in net position over time may serve as a useful indicator of a government's financial position. The County's net position decreased by approximately $775,000 during fiscal year 2019. The following schedule provides a summary of the changes in net position.

Sumter County's Changes in Net Position	Governmental Activities	
	2018 (restated)	2019
Revenues		
Program revenues:		
Charges for service	$ 18,849,867	$ 21,173,796
Operating grants and contributions	4,714,104	5,248,798
Capital grants and contributions	22,103,991	5,831,498
General revenues:		
Property taxes	57,737,736	59,834,628
Other taxes	21,720,849	22,693,939
State shared revenues	10,842,233	11,324,658
Impact fees	5,613,780	5,117,376
Other	2,995,912	3,780,493
Total revenue	$ 144,578,472	$ 135,005,186
Expenses		
General government	21,093,733	22,721,374
Public safety	66,779,321	79,884,885
Physical environment	1,585,756	2,825,239
Transportation	14,967,178	11,277,247
Economic environment	2,102,215	1,780,408
Human services	4,119,384	4,529,112
Culture-recreation	4,305,828	5,077,112
Court related	4,994,845	5,160,524
Interest on long-term debt	2,039,604	2,523,820
Total expenses	121,987,864	135,779,721
Increase in Net Position	**22,590,608**	**(774,535)**
Net Position - beginning, as restated	251,332,894	273,923,502
Net Position - ending	$ 273,923,502	$ 273,148,967

Expenses and Program Revenues – Governmental Activities

Fiscal Year 2019

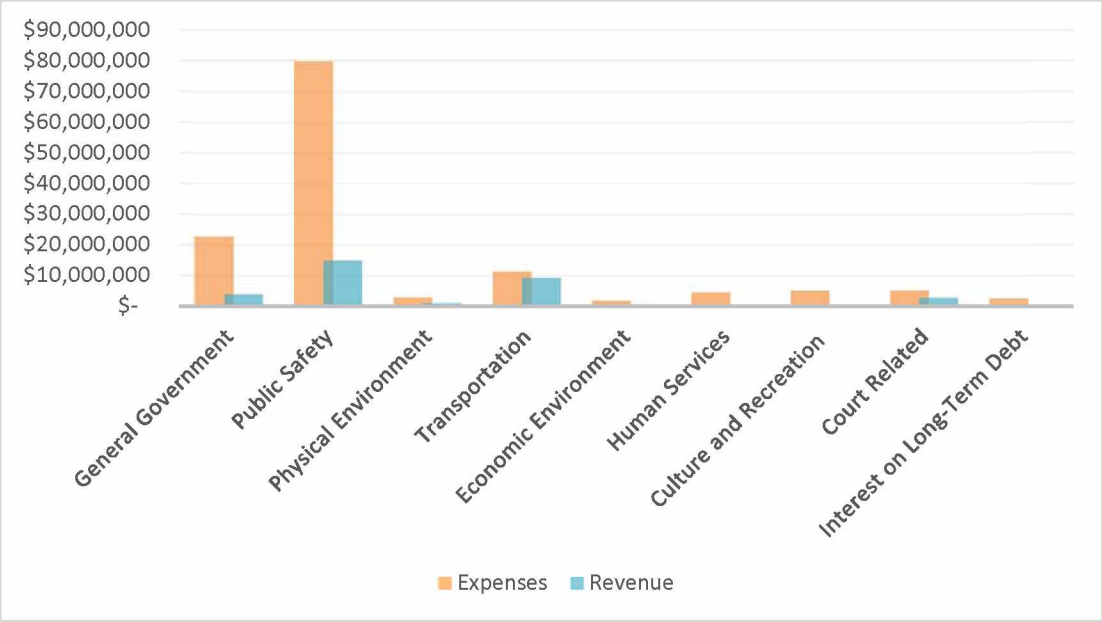

Expenses and revenues for governmental activities are shown graphically by function. The largest expenses relate to public safety followed by general government and then transportation.

Revenues by Source - Governmental Activities
Fiscal Year 2019

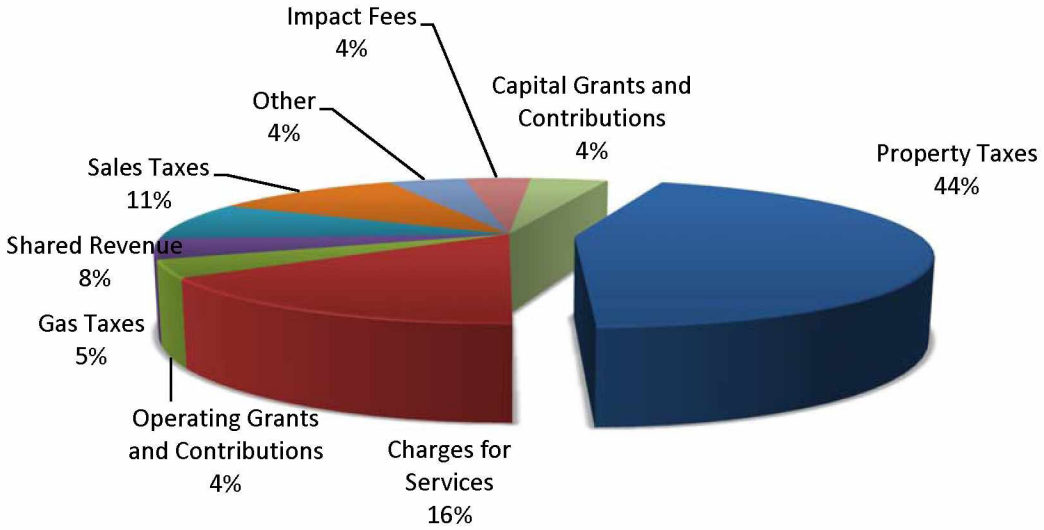

Revenues for governmental activities are shown graphically by source. The largest source of revenues for governmental activities was property taxes followed by capital grants and contributions. Total revenues, excluding capital contributions, decreased by 6.6% from fiscal year 2018, due to the reduction in capital grants, while expenses increased 11.3%. The millage rate decreased by 3.3%, from 5.52 in Fiscal Year 2018 to 5.3365 in Fiscal Year 2019. The County has maintained a millage rate at or below the rolled back millage rate since

2006. Property tax revenues received increased by 3.6%. This increase was due predominantly to the continuing development of the County.

Transportation expenses decreased approximately 24.7% from $15 million to $11.2 million. This was primarily because of an decrease in non-capitalized road maintenance projects this fiscal year.

Public Safety expenses increased 19.6% from $67.6 million to $79.9 million. This change was primarily due to various increased expenses for the Sheriff and the Fire Department.

General Government expenses increased 7.7% from $21.1 million to $22.7 million. This change was negligible and not tied to any one event.

FINANCIAL ANALYSIS OF THE COUNTY'S FUNDS

The County uses fund accounting to ensure and demonstrate compliance with finance-related legal requirements.

Governmental Funds

The focus of the County's *governmental funds* is to provide information on near-term inflows, outflows, and balances of spendable resources. Such information is useful in assessing the County's financing requirements. In particular, *unassigned fund balance* may serve as a useful measure of a government's net resources available for spending at the end of the fiscal year.

At the end of fiscal year 2019, the County's governmental funds reported combined ending fund balances of $77.2 million, a decrease of $1.4 million. The unassigned fund balance of $5.8 million in the General Fund is available for spending at the County's discretion. Assigned fund balances include $24.5 million in the General Fund as a resource in the subsequent year's budget. The remainder is earmarked for specific purposes such as capital projects, and grants.

At the current time the County has four major governmental funds:

General Fund

The general fund is a major fund and the chief operating fund of the County. At the end of fiscal year 2019, the unassigned fund balance of the general fund was $5.8 million, while the total fund balance was $30.5 million. As a measure of the general fund's liquidity, it may be useful to compare the unassigned fund balance to total fund expenditures and transfers out. The unassigned fund balance represents 5.8% of total general fund expenditures and transfers out.

The general fund is made up of the Board of County Commissioner's general fund and all of the Constitutional Officers' general funds.

SHIP Fund – To account for revenues and expenditures associated with the State Housing Initiatives Partnership program providing housing assistance

Building Services Fund – To account for revenues and expenditures associated with Building Services.

2018 Bond Construction Fund – This is a major fund and is used for the jail expansion and renovation project, the courthouse improvements project, and SR 44 fire station and industrial park entrance project. This fund's revenues came strictly from the 2018 Capital Improvement Revenue Bond and investment earnings from those bond funds.

Proprietary Funds (Internal Service Funds and Enterprise Funds)

The County maintains an internal service fund to account for its self-funded health insurance program. Statements for the fund can be found on pages 19-21. The County does not have any enterprise funds.

GENERAL FUND BUDGETARY HIGHLIGHTS

The general fund budget was amended during the year for changing estimates of both revenues and expenditures. The general fund budget was also amended to include $5 million for the amount carried forward from FY 2018. Actual expenditures were $19.5 million less than the final budget. The major reason is the budget includes a reserve for contingencies of $18.4 million that was not needed in FY 2019.

The general fund's actual revenue exceeded the final budget revenue by $8.6 million. Tax revenues received were $4 million more than the final budget. Miscellaneous revenues were higher than the amount of the final budget by $2.6 million, mainly because the investment returns were higher than expected.

CAPITAL ASSETS AND DEBT ADMINISTRATION

Capital Assets

Sumter County's Capital Assets Net of Depreciation	Governmental Activities	
	2019	2018 (restated)
Land	$ 37,592,155	$ 37,566,057
Buildings	106,785,493	110,869,389
Improvements	1,259,239	1,480,085
Equipment	9,434,759	9,804,432
Infrastructure	157,268,857	146,629,943
Construction in progress	28,207,268	22,704,871
	$ 340,547,771	$ 329,054,777

The County's investment in capital assets, for its governmental activities as of September 30, 2019, amounts to $340,547,771 (net of accumulated depreciation). The investment in capital assets includes land, buildings, improvements other than buildings, equipment, construction in progress and infrastructure.

Major construction projects underway at the end of the fiscal year included the following:

- C468 from CR 505 to US 301 at a total estimated cost of $12.6 million
- CR 501 four lane road with intersection at C468at a total estimated cost of $10.2 million
- Courthouse parking garage structure at a total estimated cost of $6.65 million

Major capital asset projects completed during the current fiscal year include the following:

- C-48 safety improvements from CR616 to Citrus County line at a cost of $3.6 million
- C-475 from C-470 to CR 542 at a cost of $4.2 million
- CR 673 from US301 to I-75 at a cost of $2.6 million.

Additional information on the County's capital assets can be found in Note 8 on page 32.

Long-term Debt

On September 30, 2019, the County had total bonded debt of $75.4 million. The County has pledged specific revenue sources as a method of repayment. The County has insured ratings on its bonds of "AA" (stable outlook) and "A2" (stable outlook) from Standard and Poor's and Moody's respectively. Fitch Ratings have assigned ratings of "AA+" (stable outlook) to the 2015B Bonds without regard to the insurance policy.

In April 2013, the County entered into an agreement with Hancock Bank to refund the 2003 Capital Improvement Revenue Refunding Bonds for a $7.3 million refunding revenue note to reduce future cash flows. As of September 30, 2019, $3.3 million is outstanding.

In April 2015, the County entered into an agreement with TD Bank to refund the 2006 Capital Improvement Revenue Refunding Bonds for a $28.6 million refunding revenue bond to reduce future cash flows. As of September 30, 2019, $25.7 million is outstanding.

In June 2015, the County issued $24.3 million in Capital Improvement Revenue Bonds to finance the planning, engineering, constructing, reconstructing and equipping of The Villages® Sumter County Public Safety Center and the Bushnell Sumter County Public Safety Center. As of September 30, 2019, $20.9 million is outstanding.

In July 2018, the County entered into an agreement with The Villages® Companies whereby The Villages® Companies will construct regionally significant roads in Sumter County that are the County's responsibility to build. The County will reimburse The Villages® Companies within five years of being invoiced. As of September 2019 $8.4 million is outstanding.

In August 2018, the County entered into an agreement with Citizens First Bank to issue a Capital Improvement Revenue Bond for $30 million to finance the Jail Expansion & Renovation Project, the Courthouse Improvement Project and SR 44 Fire Station and Industrial Park Entrance Project. As of September 30, 2019, $28.8 million is outstanding.

Additional information on the County's long-term debt can be found in Notes 9 and 10 on pages 33-35.

FISCAL YEAR 2020 BUDGET AND SIGNIFICANT FINANCIAL CONDITIONS

Taxable property values used in preparing the 2020 budget have risen in 2019 and new taxable properties were added that allow for the continued level of service.

The millage for fiscal year 2020 increased from 5.3365 to 6.7000 mills.

REQUESTS FOR INFORMATION

This financial report was designed to provide a general overview of Sumter County's finances for all those with an interest in the government's finances. Questions concerning any of the information provided in this report or requests for additional financial information should be addressed to the Finance Director, Clerk of Circuit Court, P.O. Box 247, Bushnell, Florida 33513-0247.

BASIC FINANCIAL STATEMENTS

Sumter County, Florida
Statement of Net Position
September 30, 2019

	Primary Government Governmental Activities
ASSETS	
Cash and equivalents	$ 23,365,013
Investments	61,926,221
Due from other governments	5,441,824
Receivables	8,621,754
Mortgages receivable	3,855,663
Prepaids	130,419
Capital assets:	
Non-depreciable	65,799,423
Depreciable, net	274,748,348
TOTAL ASSETS	443,888,665
DEFERRED OUTFLOWS OF RESOURCES	
Deferred outflows - loss on refunding	915,923
Deferred outflows - Pension FRS/HIS	26,440,007
TOTAL DEFERRED OUTFLOWS	27,355,930
LIABILITIES	
Accounts payable and accrued liabilities	9,162,758
Accrued interest payable	799,869
Unearned revenue	36,593
Noncurrent liabilities:	
Due within one year	5,727,718
Due in more than one year	175,194,423
TOTAL LIABILITES	190,921,361
DEFERRED INFLOWS OF RESOURCES	
Deferred inflows - Pension FRS/HIS	4,917,760
Deferred inflows - OPEB	2,256,507
TOTAL DEFERRED INFLOWS	7,174,267
NET POSITION	
Net investment in capital assets	287,166,084
Restricted for:	
Debt service	1,761,802
Tourist development	1,979,612
Building services	1,322,585
Court related	2,118,536
Public safety	851,146
General government	671,911
Transportation	10,964,929
Economic environment	93,542
Physical environment	28,892
Boating improvements	113,992
Records modernization	532,828
Unrestricted	(34,456,892)
TOTAL NET POSITION	$ 273,148,967

See accompanying notes

Sumter County, Florida
Statement of Activities
For the Year Ended September 30, 2019

Functions/Programs	Expenses	Program Revenues: Charges for Services	Program Revenues: Operating Grants and Contributions	Program Revenues: Capitai Grants and Contributions	Net (Expense) Revenue and Changes in Net Position: Primary Government: Governmentai Activities
PRIMARY GOVERNMENT:					
GOVERNMENTAL ACTIVITIES:					
General government	$ 22,721,374	$ 3,850,862	$ 34,413	$ -	$ (18,836,099)
Public safety	79,884,885	14,098,810	777,362	-	(65,008,713)
Physical environment	2,825,239	295,937	668,400	-	(1,860,902)
Transportation	11,277,247	101,199	3,305,957	5,831,498	(2,038,593)
Economic environment	1,780,408	-	350,000	-	(1,430,408)
Human services	4,529,112	19,293	54,461	-	(4,455,358)
Culture and recreation	5,077,112	80,752	58,205	-	(4,938,155)
Court related	5,160,524	2,726,943	-	-	(2,433,581)
Interest on long-term debt	2,523,820	-	-	-	(2,523,820)
TOTAL PRIMARY GOVERNMENT	$ 135,779,721	$ 21,173,796	$ 5,248,798	$ 5,831,498	$ (103,525,629)

GENERAL REVENUES:	
Property taxes	59,834,628
Discretionary sales taxes	14,422,006
Gas taxes	6,181,120
Communications service taxes	1,275,327
Tourist development taxes	815,486
Impact fees	5,117,376
Unrestricted shared revenues	11,324,658
Investment earnings	2,810,963
Miscellaneous	969,530
TOTAL GENERAL REVENUES	102,751,094
CHANGE IN NET POSITION	(774,535)
NET POSITION - BEGINNING, as previously reported	770,875,075
Restatements	(496,951,573)
NET POSITION - BEGINNING, as restated	273,923,502
NET POSITION - END OF YEAR	$ 273,148,967

See accompanying notes

Sumter County, Florida
Balance Sheet - Governmental Funds
September 30, 2019

	General Fund	SHIP Fund	2018 Bond Construction Fund	Building Services Fund	Other Governmental Funds	Total
ASSETS						
Cash and equivalents	$ 17,003,588	$ 75,936	$ 2,167,494	$ 373,805	$ 3,631,698	$ 23,252,521
Investments	14,386,209	295,470	25,385,382	2,366,755	14,830,334	57,264,150
Due from other funds	301,288	-	-	-	21,436	322,724
Due from other governments	1,899,298	-	-	-	3,542,526	5,441,824
Receivables	72,948	-	-	3,299	138,848	215,095
Prepaid expenses	127,717	-	-	-	-	127,717
Mortgage receivables	-	3,855,663	-	-	-	3,855,663
					-	
TOTAL ASSETS	$ 33,791,048	$ 4,227,069	$ 27,552,876	$ 2,743,859	$ 22,164,842	$ 90,479,694
LIABILITIES						
Accounts payable and accrued liabilities	$ 3,047,960	$ 54,727	$ 1,555,126	$ 1,293,175	$ 1,899,009	$ 7,849,997
Due to other funds	162,287	-	-	-	301,288	463,575
Due to other governments	-	-	-	15,817	-	15,817
TOTAL LIABILITIES	3,210,247	54,727	1,555,126	1,308,992	2,200,297	8,329,389
DEFERRED INFLOWS OF RESOURCES						
Unavailable revenue	49,284	3,855,663	-	-	1,045,705	4,950,652
FUND BALANCES						
Nonspendable:						
Prepaid expenses	127,717	-	-	-	-	127,717
Restricted for:						
Teen court	5,591	-	-	-	-	5,591
Records modernization	-	-	-	-	532,828	532,828
Building Services	-	-	-	1,322,585	-	1,322,585
Public safety	-	-	-	-	843,466	843,466
Transportation	-	-	-	-	10,113,490	10,113,490
Supervisor of Elections - Grant	14,561	-	-	-	-	14,561
Economic environment	-	93,542	-	-	-	93,542
Anti-drug abuse	-	-	-	-	2,089	2,089
Library	124,522	-	-	-	-	124,522
Boating improvements	-	-	-	-	113,992	113,992
Physical environment	-	-	-	-	28,892	28,892
Tourist development	-	-	-	-	1,979,612	1,979,612
Court related	-	-	-	-	2,118,536	2,118,536
Debt service	-	-	-	-	1,761,802	1,761,802
Capital Projects	-	-	25,151,802	-	-	25,151,802
Assigned for:						
Subsequent year's budget	24,500,000	-	-	-	-	24,500,000
Public safety	-	-	-	112,282	678,922	791,204
Transportation	-	-	-	-	565,623	565,623
Physical environment	-	223,137	-	-	52,927	276,064
Court related	-	-	-	-	126,661	126,661
Capital projects	-	-	845,948	-	-	845,948
Unassigned:						
General fund	5,759,126	-	-	-	-	5,759,126
TOTAL FUND BALANCES	30,531,517	316,679	25,997,750	$ 1,434,867.00	18,918,840	77,199,653
TOTAL LIABILITIES, DEFERRED INFLOWS AND FUND BALANCES	$ 33,791,048	$ 4,227,069	$ 27,552,876	$ 2,743,859	$ 22,164,842	$ 90,479,694

See accompanying notes

Sumter County, Florida
Reconciliation of the Balance Sheet to the Statement of Net Position
Governmental Funds
September 30, 2019

FUND BALANCES – TOTAL GOVERNMENTAL FUNDS	$ 77,199,653
Capital assets used in governmental activities are not reported in the governmental funds.	
Capital Assets – Net	340,547,771
Long-term liabilities are not reported in the governmental funds.	
Bonds Payable	(75,364,353)
Issuance Premium	(769,748)
Regionally Significant Road Payable	(8,406,499)
Refunding Revenue Note	(3,315,311)
Compensated Absences	(4,057,900)
Net OPEB Obligation	(18,485,750)
Net Pension Liability FRS / HIS	(70,522,580)
Deferred Loss on Refunding	915,923
Deferred Outflow Amount for Pension - FRS and HIS	26,440,007
Interest payable on long-term debt is not accrued in the governmental funds	(799,869)
Receivables for regionally significant roads not yet transferred	8,406,499
Deferred inflows for earned but unavailable revenue are reported in the governmental funds but not in the statement of net position	4,950,652
Deferred Inflow Amount for Pension - FRS/HIS	(4,917,760)
Deferred Inflow Amount for OPEB	(2,256,507)
The assets and liabilities of Internal service funds are reported with governmental activities	3,584,739
NET POSITION OF GOVERNMENTAL ACTIVITIES	$ 273,148,967

See accompanying notes

Sumter County, Florida
Statement of Revenues, Expenditures and Changes in Fund Balances
Governmental Funds
For the Year Ended September 30, 2019

	General Fund	SHIP Fund	Building Services Fund	2018 Bond Construction Capital Projects Fund	Other Governmental Funds	Total Governmental Funds
REVENUES						
Taxes	$ 75,531,961	$ -	$ -	$ -	$ 6,996,606	$ 82,528,567
Permits, fees and special assessments	8,249,021	-	2,119,781	-	5,141,274	15,510,076
Intergovernmental	1,456,472	350,000	-	-	22,064,610	23,871,082
Charges for services	5,365,505	-	7,112	-	2,039,117	7,411,734
Fines and forfeitures	17,225	-	-	-	843,940	861,165
Miscellaneous	2,893,121	223,137	90,047	845,948	1,035,829	5,088,082
TOTAL REVENUES	93,513,305	573,137	2,216,940	845,948	38,121,376	135,270,706
EXPENDITURES						
Current:						
General government	14,401,083	-	-	-	15,424	14,416,507
Public safety	62,135,014	-	2,667,680	-	859,877	65,662,571
Physical environment	2,452,336	-	-	-	-	2,452,336
Transportation	1,943,775	-	-	-	20,227,525	22,171,300
Economic environment	1,202,013	687,737	-	-	-	1,889,750
Human services	4,244,733	-	-	-	13,835	4,258,568
Culture and recreation	4,234,915	-	-	-	366,483	4,601,398
Court related	1,694,729	-	-	-	3,234,901	4,929,630
Capital outlay	-	-	-	4,691,787	-	4,691,787
Debt service:						
Principal retirement	1,802,638	-	-	-	3,563,590	5,366,228
Interest and fiscal charges	33,962	-	-	-	2,365,331	2,399,293
TOTAL EXPENDITURES	94,145,198	687,737	2,667,680	4,691,787	30,646,966	132,839,368
EXCESS OF REVENUES OVER (UNDER) EXPENDITURES	(631,893)	(114,600)	(450,740)	(3,845,839)	7,474,410	2,431,338
OTHER FINANCING SOURCES (USES)						
Transfers in	5,199,983	-	22,235	-	1,119,971	6,342,189
Transfers out	(5,006,826)	-	-	-	(5,199,983)	(10,206,809)
TOTAL OTHER FINANCING SOURCES (USES)	193,157	-	22,235	-	(4,080,012)	(3,864,620)
NET CHANGE IN FUND BALANCES	(438,736)	(114,600)	(428,505)	(3,845,839)	3,394,398	(1,433,282)
FUND BALANCES – BEGINNING OF YEAR	30,970,253	431,279	1,863,372	29,843,589	15,524,442	78,632,935
FUND BALANCES – END OF YEAR	$ 30,531,517	$ 316,679	$ 1,434,867	$ 25,997,750	$ 18,918,840	$ 77,199,653

See accompanying notes

Sumter County, Florida
Reconciliation of the Statement of Revenues, Expenditures and Changes in Fund Balances to the Statement of Activities - Governmental Funds
For the Year Ended September 30, 2019

NET CHANGE IN FUND BALANCES – TOTAL GOVERNMENTAL FUNDS	$	(1,433,282)
Governmental funds report capital outlays as expenditures. However, in the statement of activities the cost of those assets are depreciated over their estimated useful lives.		
Acquisitions of Capital Assets		23,458,627
Current Year Depreciation Expense		(11,625,488)
Loss on Capital Asset Disposals and Abandonment		(340,145)
The issuance of long-term debt provides current financial resources to governmental funds, while the repayment of long-term debt consumes current financial resources, but neither transaction has any effect on net position.		
Principal payments		5,366,228
The net change in the Net Pension Liability (FRS / HIS) is reported in the government-wide statements, but not in the governmental fund statements.		(9,107,505)
Some expenses reported in the statement of activities do not require the use of current financial resources and therefore are not reported as expenditures in governmental funds.		
Compensated Absences		47,000
Interest on Long-Term Debt		(92,224)
Amortization of Bond Premium		48,873
Amortization of Deferred Charge on Refunding		(81,176)
Net OPEB Obligation		(1,583,135)
Change in deferred outflows related to pensions		(2,422,928)
Change in deferred inflows related to pensions		1,010,074
Change in deferred outflows related to OPEB		(337,148)
Change in deferred inflows related to OPEB		(2,252,137)
The timing of revenue recognition sometimes differs between the governmental funds and governmental activities		(60,821)
Change in Net Position of the Internal Service Fund		(1,369,348)
CHANGE IN NET POSITION OF GOVERNMENTAL ACTIVITIES	$	(774,535)

See accompanying notes

Sumter County, Florida
Statement of Net Position - Proprietary Funds
September 30, 2019

	Governmental Activities
	Internal Service Fund
CURRENT ASSETS	
Cash and equivalents	$ 112,492
Investments	4,662,071
Due from other funds	140,851
Receivables	160
Prepaid insurance	2,702
TOTAL ASSETS	4,918,276
CURRENT LIABILITIES	
Accounts payable and accrued liabilities	812,944
Liability for self-insured losses	484,000
Unearned Revenue	36,593
TOTAL LIABILITIES	1,333,537
NET POSITION	
Unrestricted	$ 3,584,739

See accompanying notes

Sumter County, Florida
Statement of Revenues, Expenses and Changes in Fund Net Position - Proprietary Funds
For the Year Ended September 30, 2019

	Governmental Activities
	Internal Service Fund
OPERATING REVENUES	
Charges for insurance	$ 4,047,116
Miscellaneous revenue	310,130
TOTAL OPERATING REVENUES	4,357,246
OPERATING EXPENSES	
Claims expense	7,946,008
Premiums for insurance/reinsurance	1,169,088
General and administrative	637,825
TOTAL OPERATING EXPENSES	9,752,921
OPERATING LOSS	(5,395,675)
NONOPERATING REVENUES	
Interest revenue	161,707
LOSS BEFORE TRANSFERS	(5,233,968)
TRANSFERS	
Transfers in	3,864,620
CHANGE IN NET POSITION	(1,369,348)
NET POSITION - BEGINNING OF YEAR	4,954,087
NET POSITION - END OF YEAR	$ 3,584,739

See accompanying notes

Sumter County, Florida
Statement of Cash Flows - Proprietary Funds
For the Year Ended September 30, 2019

	Governmental Activities
	Internal Service Fund
CASH FLOWS FROM OPERATING ACTIVITIES	
Cash received for premiums	$ 4,053,825
Cash received for miscellaneous revenue	310,130
Cash paid on insurance claims	(7,793,376)
Cash paid for insurance and reinsurance	(1,171,790)
Cash paid to other vendors	(695,339)
NET CASH USED BY OPERATING ACTIVITIES	(5,296,550)
CASH FLOWS FROM NONCAPITAL FINANCING ACTIVITIES	
Transfers in	3,864,620
NET CASH PROVIDED FROM NONCAPITAL FINANCING ACTIVITIES	3,864,620
CASH FLOWS FROM INVESTING ACTIVITIES	
Interest received	161,707
NET INCREASE IN CASH AND CASH EQUIVALENTS	(1,270,223)
CASH AND EQUIVALENTS -- BEGINNING OF YEAR	6,044,786
CASH AND EQUIVALENTS -- END OF YEAR	$ 4,774,563
RECONCILIATION OF OPERATING LOSS TO NET CASH USED BY OPERATING ACTIVITIES:	
OPERATING LOSS	$ (5,388,675)
Change in assets and liabilities	
Due from other funds	138,556
Receivables	(129,780)
Accounts payable and accrued liabilities	88,118
Liability for self-insured losses	120,000
Advance collections	5,942
NET CASH USED BY OPERATING ACTIVITIES	$ (5,165,839)

See accompanying notes

Sumter County, Florida
Statement of Fiduciary Net Position
September 30, 2019

	Agency Funds
ASSETS	
Cash and equivalents	$ 6,247,696
Receivables	1,739
TOTAL ASSETS	$ 6,249,435
LIABILITIES	
Assets held for others	$ 6,249,435
NET POSITION	$ -

See accompanying notes

1. SUMMARY OF SIGNIFICANT ACCOUNTING POLICIES

The accounting policies of Sumter County, Florida (the "County") conform to generally accepted accounting principles as applicable to governments. The following is a summary of the more significant policies:

➢ Reporting Entity

The County is a non-charter, general purpose local government established under the legal authority of the Constitution of the State of Florida. It is composed of an elected Board of County Commissioners and elected constitutional officers – Clerk of the Circuit Court, Property Appraiser, Sheriff, Supervisor of Elections, and Tax Collector – that operate as separate county agencies.

The County uses the criteria established in GASB Statement No.14, as amended, to define the reporting entity and identify component units. Component units are legally separate entities for which the County is considered to be financially accountable. In addition, component units can be other organizations which their relationship with the County would cause the County's financial statements to be misleading.

- Blended Component Units - Although legally separate entities, blended component units are in substance part of the primary government's operations and, accordingly, data from these units, if any, would be combined with the data of the primary government. The County does not report any blended component units.

- Discretely Presented Component Units - Discretely presented component units, on the other hand, are reported in a separate column in the financial statements to emphasize that they are legally separate from the primary government. The County does not report any discretely presented component units.

The County did not participate in any joint ventures during the 2019 fiscal year.

➢ Basis of Presentation

Government-Wide Financial Statements – The government-wide financial statements (i.e., the statement of net position and the statement of activities) report information on all of the nonfiduciary activities of the County. For the most part, the effect of interfund activity has been removed from these statements. Governmental activities, which normally are supported by taxes and intergovernmental revenues, are reported separately from business-type activities, which rely to a significant extent on fees charged to external parties. The County has no business-type activities.

The statement of activities demonstrates the degree to which the direct expenses of a given function are offset by program revenues. Direct expenses are those that are clearly identifiable with a specific function. Program revenues include: charges for services that are directly related to a given function and grants and contributions that are restricted to meeting the operational or capital requirements of a particular function. Taxes and other revenues not properly included among program revenues are reported instead as general revenues.

Fund Financial Statements - Separate financial statements are provided for governmental funds, proprietary funds and fiduciary funds, even though the latter are excluded from the government-wide financial statements. Major individual governmental funds are reported as separate columns in the fund financial statements, but all non-major funds are aggregated and displayed in a single column. The governmental fund financial statements include reconciliations with brief explanations to better identify the relationship between the government-wide statements and the statements of the governmental funds.

The County reports the following major governmental funds:

- General Fund – The General Fund is the primary operating fund. It is used to account for and report all financial resources not accounted for and reported in another fund.

- SHIP Fund - This special revenue fund is used to account for revenues and expenditures associated with the State Housing Initiatives Partnership program providing housing assistance.

- Building Services Fund - This special revenue fund is used to account for revenues and expenditures associated with Building Services including building inspections and permitting.

- 2018 Bond Construction Fund – This capital projects fund is used to account for the 2018 Bond proceeds which will be used to finance the planning, engineering, constructing, reconstructing and equipping of Jail Expansion and Renovation Project, the Courthouse Improvements Project, and SR 44 Fire Station and Industrial Park Entrance Project.

Additionally, the County reports the following funds:

- Internal Service Fund – Accounts for the risk financing activities of the Board and the other County agencies on a cost reimbursement basis.

- Agency Funds – Accounts in the custody of the Clerk of the Circuit Court, Tax Collector and Sheriff for resources held in a purely custodial capacity.

➢ **Measurement Focus and Basis of Accounting**

The government-wide financial statements are reported using the economic resources measurement focus and the accrual basis of accounting, as are the proprietary fund financial statements. Revenues are recorded when earned and expenses are recorded when a liability is incurred, regardless of the timing of related cash flows. Agency funds have no measurement focus; however, they use the accrual basis of accounting.

Property taxes are recognized as revenues in the year for which they are levied. Grants and similar items are recognized as revenue as soon as all eligibility requirements imposed by the provider have been met.

Governmental funds are accounted for using the current financial resources measurement focus and the modified accrual basis of accounting. Revenues are recognized when they become measurable and available as net current assets. For this purpose, the County considers revenues to be available if they are collected within sixty days of the end of the current fiscal year. Taxes and certain intergovernmental revenues constitute the most significant sources of revenue considered susceptible to accrual. In governmental funds, expenditures are generally recognized when the related liability is incurred. However, debt service expenditures, and expenditures related to compensated absences and claims and judgments, are recorded only when payment is due.

- **Proprietary Funds**

Proprietary funds record both operating and non-operating revenues and expenses. The principal operating revenues are those that are obtained from the operations of the proprietary fund and include charges to other funds on a cost reimbursement basis. Non-operating revenues are not related to the operations of the proprietary fund and include interest earnings. Operating expenses represent the cost of operations. Non-operating expenses are not related to operations.

- **Cash Equivalents**

For purposes of the Statement of Cash Flows, only highly liquid investments with original maturities of three months or less are considered to be cash equivalents.

- **Pensions**

For purposes of measuring the net pension liability, deferred outflows of resources and deferred inflows of resources related to pensions, and pension expense, information about the fiduciary net position of the Florida Retirement System Pension Plan and Health Insurance Subsidy Program and additions to/deductions from the plans' fiduciary net position have been determined on the same basis as they are reported by the plans. For this purpose, benefit payments (including refunds of employee contributions) are recognized when due and payable in accordance with the benefit terms. Investments are reported at fair value.

- **Prepaid Items**

Certain payments to vendors reflect costs applicable to future accounting periods and are recorded as prepaid items in both the government-wide and governmental fund financial statements. Prepaid items are accounted for under the consumption method. An offsetting non-spendable fund balance is reported in the governmental fund financial statements to indicate that inventories and prepaid items do not represent spendable resources.

- **Mortgages Receivable**

Mortgages receivable are reported net of an allowance for uncollectible accounts of approximately $540,000. Most of the balance is not expected to be repaid within the next fiscal year.

- **Capital Assets**

Capital assets are valued at historical cost or estimated historical cost. Donated capital assets are recorded at acquisition value. The threshold for capitalizing property and equipment is generally $5,000. The threshold for capitalizing infrastructure is $50,000.

Depreciation is calculated using the straight-line method over the following estimated useful lives:

Buildings	30 – 50 years
Improvements	10 – 50 years
Equipment	5 – 15 years
Infrastructure	25 – 85 years

- **Amortization**

Bond premiums and deferred amounts on refunding are amortized over the life of the bonds using the straight-line method.

- **Unearned Revenue**

If assets have been received by the County for services to be rendered in future periods, asset balances have been offset by an unearned revenue liability account.

- **Compensated Absences**

Personnel policies of the various county agencies allow a limited accumulation and vesting of unused employee paid time off. Some county agencies use paid time off while others use vacation and sick leave. A liability is accrued when incurred in the government-wide financial statements. However, a liability is reported in governmental funds only when payment is due. The General Fund has typically been used to liquidate the liability for compensated absences.

- **Nature and Purpose of Fund Balance Classifications**

The County follows the provisions of GASB Statement No. 54, *Fund Balance Reporting and Governmental Fund Type Definitions,* to classify fund balances for governmental funds into specifically defined classifications. The classifications comprise a hierarchy based primarily on the extent to which the County is bound to honor constraints on the specific purposes for which amounts in the funds can be spent.

The fund balance classifications specified in GASB Statement No. 54 are as follows:

Nonspendable Fund Balance – Nonspendable fund balances are amounts that cannot be spent because they are either (a) not in spendable form or (b) legally or contractually required to be maintained intact.

Restricted Fund Balance – Restricted fund balances are restricted when constraints placed on the use of resources are either: (a) externally imposed by creditors, grantors, contributors, or laws or regulations of other governments; or (b) imposed by law through constitutional provisions or enabling legislation.

Committed Fund Balance – Committed fund balances are amounts that can only be used for specific purposes as a result of constraints imposed by formal action of the County's highest level of decision-making authority, which is an ordinance of the County. Committed amounts cannot be used for any other purpose unless the County removes those constraints by taking the same type action.

Assigned Fund Balance – Assigned fund balances are amounts that are constrained by the County's intent to be used for specific purposes, but are neither restricted nor committed. The County does not have a formal policy that addresses assigned fund balances; however, the intent is expressed by the Board of County Commissioners via the budget process or by the County Administrator.

Unassigned Fund Balance – Unassigned fund balance is the residual classification for the General Fund which is the only fund that reports a positive unassigned fund balance amount.

The County's practice is to expend resources in the following order: restricted, committed, assigned, and unassigned.

- **Deferred Outflows of Resources and Deferred Inflows of Resources**

Deferred outflows of resources represent a consumption of net assets that applies to a future period and will not be recognized as an outflow of resources (expense or expenditure) until that time.

Deferred inflows of resources represent an acquisition of net assets that applies to a future period and will not be recognized as an inflow of resources (revenue) until that time.

- **Restricted Net Position**

In the accompanying Statement of Net Position, restricted net position is subject to restrictions beyond the County's control. The restriction is either externally imposed (for instance, by creditors, grantors, contributors, or laws/regulations of other governments) or is imposed by law through constitutional provisions or enabling legislation. Approximately $2.2 million of restricted net position is restricted by enabling legislation. It is the practice of the County to utilize restricted assets before unrestricted assets.

- **Use of Estimates**

The preparation of financial statements in conformity with generally accepted accounting principles requires management to make various estimates. Actual results could differ from those estimates.

2. CASH AND EQUIVALENTS

The financial institutions in which the various county agencies place their deposits are certified as "qualified public depositories", as required under the Florida Security for Public Deposits Act. Therefore, the deposits are entirely insured by Federal depository insurance and/or entirely collateralized pursuant to Chapter 280, Florida Statutes.

3. INVESTMENTS

The County invests excess public funds pursuant to the guidelines established in Section 218.415, Florida Statutes, which authorizes investments in the following instruments: The Local Government Surplus Funds Trust Fund; Securities and Exchange Commission registered money market funds with the highest credit quality rating; savings accounts and certificates of deposit in qualified public depositories; and direct obligations of the U.S. Treasury. The County also has an investment policy that allows investments in repurchase agreements and obligations of United States government agencies and instrumentalities.

At year end, the County's Investments consisted of:

		Maturities (in years)			
	Fair Value	Less Than 1	1-2	Greater Than 2	Rating
State Investment Pool - Florida PRIME	$ 3,031,087	$ 3,031,087	$ -	$ -	AAAm
Florida SAFE - Stable NAV	7,311,394	7,311,394	-	-	AAAf
Florida SAFE - Variable NAV	15,654,000	14,210,730	344,998	1,008,272	AAAf
Regions Bank Wealth Platform	5,098,530	5,098,530	-	-	N/A
Florida Local Government Investment Trust	24,909,118	3,703,986	11,772,049	9,433,083	AAAf
Florida Fixed Income Trust - PDP	5,922,092	5,922,092	-	-	N/A
TOTAL INVESTMENTS	$ 61,926,221	$ 39,277,819	$ 12,117,047	$ 10,441,355	

The State Pool (Florida PRIME) is an external investment pool that meets all of the necessary criteria to elect to measure all of the investments in Florida PRIME at amortized cost. Therefore, the County's investment in Florida PRIME is reported at amortized cost. The fair value of the position in the pool is equal to the value of the pool shares. As of September 30, 2019, there were no redemption fees or maximum transactions amounts, or any other requirements that serve to limit a participant's daily access to 100 percent of their account value.

The Florida Local Government Investment Trust (FLGIT) is an external investment pool that does not meet all of the necessary criteria to elect to measure all of the investments in FLGIT at amortized cost. Therefore, the County's investment in FLGIT is reported at the fair value of the County's share in the investments.

The Florida Surplus Asset Fund Trust (Florida SAFE) and the Florida Fixed Income Trust are both investment pools organized pursuant to Florida Statutes 163.01 and are reported at fair value.

These are considered external investment pools for reporting purposes. The County owns shares in one or more of the Pool's portfolios. The County's investments are the Pools' portfolios, not the individual securities held within each Pool's portfolio. The County owns a share of the portfolio and not the underlying securities.

The County's investments expose it to credit risk and interest rate risk.

Credit Risk – The risk that an issuer or other counterparty to an investment will not fulfill its obligations. The County's investment policy limits credit risk by restricting authorized investments to the following:

- The State Board of Administration's Local Government Surplus Funds Trust Fund (Florida PRIME), Florida Local Government Investment Trust (FLGIT) or any intergovernmental investment pool authorized pursuant to the Florida Interlocal Cooperation Act as provided in Florida Statute 163.01.

- Securities and Exchange Commission registered fixed income funds with a credit quality rating equal to or greater than the credit rating of the United States Treasury Bill from a nationally recognized rating agency.

- Interest-bearing time deposits or savings accounts in Qualified Public Depositories as defined in Florida Statute 280.02(26) or interest-bearing time deposits or savings accounts insured by the Federal Deposit Insurance Corporation or through a custodian agreement of FDIC Insured Institutions.

- Direct obligations of the United States Treasury.

- Obligations of federal agencies, government sponsored enterprises, and instrumentalities.

- Securities of, or other interest in, any open-end or closed-end management type investment company or investment trust registered under the Investment Company Act of 1940, 15 United States Code ss. 80a-1 et seq., as amended from time to time, provided the investment objectives of said investment company or investment trust are similar to the investment objectives of this Policy.

Interest Rate Risk – The risk that changes in interest rates will adversely affect the fair value of an investment. The County's investment policy limits interest rate risk by attempting to match investment maturities with known cash needs and anticipated cash flow requirements. In addition, the maximum stated investment maturity is ten (10) years.

A portfolio's WAL is the dollar weighted average length of time until securities held reach maturity. A portfolio's WAM is the dollar weighted average maturity

The weighted average maturity (WAM) of Florida PRIME at September 30, 2019 was 36.5 days.

The weighted average maturity (WAM) of Florida SAFE at September 30, 2019 was 37 days.

The weighted average maturity (WAM) of the Florida Fixed Income Trust PDP at September 30, 2019 was 1 day.

The effective duration for Florida Local Government Investment Trust at September 30, 2019 was 1.94 years.

4. FAIR VALUE MEASUREMENTS

The County categorizes its fair value measurements within the fair value hierarchy established by generally accepted accounting principles. The hierarchy is based on the valuation inputs used to measure the fair value of the asset. Level 1 inputs are quoted prices in active markets for identical assets; Level 2 inputs are significant other observable inputs; Level 3 inputs are significant unobservable inputs.

The County has the following recurring fair value measurements as of September 30, 2019:

- Investment pools organized pursuant to Florida Statutes 163.01 – Valued at the daily closing price as reported by the fund.

Investments in external pools, though measured at fair value, are not categorized within the fair value hierarchy.

5. PROPERTY TAXES

In governmental funds, property tax revenues are recognized when levied, to the extent that they result in current receivables. Details of the property tax calendar are presented below:

Lien Date	January 1
Levy Date	October 1
Discount Periods	November – February
No Discount Period	March
Delinquent Date	April 1

6. INTERFUND BALANCES AND TRANSFERS

At September 30, 2019, interfund balances consisted of:

	Due To			
	General	Non-major Governmental	Internal Service Fund	Total
Due From				
General Fund	$ -	$ 21,436	$ 140,851	$ 162,287
Non-major Governmental	301,288	-	-	301,288
Totals	$ 301,288	$ 21,436	$ 140,851	$ 463,575

The outstanding balance between funds result mainly from the time lag between the dates that (1) interfund goods and services are provided before reimbursable expenditures occur, (2) transactions are recorded in the accounting system, and (3) payments between funds are made.

Interfund transfers are summarized below:

	General	Non-major Governmental	Total
Transfers In			
General Fund	$ -	$ 5,199,983	$ 5,199,983
Building Services	22,235	-	22,235
Non-major Governmental	1,119,971	-	1,119,971
Internal Service	3,864,620	-	3,864,620
Totals	$ 5,006,826	$ 5,199,983	$ 10,206,809

Transfers are used to (1) move revenues from the fund that Statutes or budget requires to collect them to the fund that Statutes or budget requires to expend them, (2) move excess amounts to be distributed to the General Fund after all debt service reserve amounts have been satisfied for the period and (3) use unrestricted revenues collected in the General Fund to finance various programs accounted for in other funds in accordance with budgetary authorizations.

7. DISAGGREGATED PAYABLES

- **Governmental Funds**

At September 30, 2019, General Fund payables consisted of 13% wages and benefits payable and 87% payable to vendors in the normal course of business. The payables of the non-major governmental funds consist primarily of amounts due for goods and services received in the normal course of business.

- **Proprietary Funds**

Internal Service Fund payables are composed of normal trade payables, primarily for health insurance claims.

8. CHANGES IN CAPITAL ASSETS

A summary of changes in capital assets follows:

	Balance September 30 2018, as restated	Increases	Decreases	Balance September 30 2019
Capital assets not being depreciated:				
Land	$ 37,566,057	$ 26,098	$ -	$ 37,592,155
Construction in progress	22,704,871	20,458,948	14,956,551	28,207,268
Total capital assets not being depreciated	60,270,928	20,485,046	14,956,551	65,799,423
Capital assets being depreciated:				
Buildings	137,605,936	323,735	508,162	137,421,509
Improvements	5,922,290	-	-	5,922,290
Equipment	34,757,948	2,999,677	1,360,035	36,397,590
Infrastructure	187,195,209	14,606,720	-	201,801,929
Total capital assets being depreciated	365,481,383	17,930,132	1,868,197	381,543,318
Less accumulated depreciation for:				
Buildings	26,736,547	4,196,893	297,424	30,636,016
Improvements	4,442,205	220,846	-	4,663,051
Equipment	24,953,516	3,239,943	1,230,628	26,962,831
Infrastructure	40,565,266	3,967,806	-	44,533,072
Total accumulated depreciation	96,697,534	11,625,488	1,528,052	106,794,970
Total capital assets being depreciated, Net	268,783,849	6,304,644	340,145	274,748,348
Capital assets, Net	$ 329,054,777	$ 26,789,690	$ 15,296,696	$ 340,547,771

Depreciation expense was charged to the functions of the primary government as follows:

General government	$ 984,788
Public safety	5,555,686
Physical environment	85,601
Transportation	3,835,098
Economic environment	1,503
Human services	145,127
Culture and recreation	330,917
Court related	686,768
Total depreciation expense	$ 11,625,488

9. LONG-TERM LIABILITIES

At September 30, 2019, long-term liabilities consisted of:

Capital Improvement Revenue Bond, Series 2018	$ 28,846,512
Capital Improvement Refunding Revenue Bonds, Series 2015A	25,667,841
Capital Improvement Revenue Bonds, Series 2015B	20,850,000
Bond Premium	769,748
Capital Improvement Refunding Revenue Note, 2013	3,315,311
Agreement with The Villages® Companies	8,406,499
Other Post-employment Benefits	18,485,750
Compensated Absences	4,057,900
Net Pension Liability - FRS & HIS	70,522,580
Total Long-Term Liabilities	$ 180,922,141

Aggregate maturities of the bonds are as follows:

Year ending September 30,	Principal	Interest	Total
2020	$ 2,899,697	$ 2,385,713	$ 5,285,410
2021	2,988,266	2,290,967	5,279,233
2022	3,092,910	2,193,099	5,286,009
2023	3,188,225	2,091,834	5,280,059
2024	3,287,269	1,987,340	5,274,609
2025-2029	23,382,426	7,942,492	31,324,918
2030-2034	27,328,495	4,004,247	31,332,742
2035-2038	9,197,065	575,306	9,772,371
Total	$ 75,364,353	$ 23,470,998	$ 98,835,351

Aggregate maturities of the revenue refunding note is as follows:

Year ending September 30,	Principal	Interest	Total
2020	$ 672,821	$ 58,355	$ 731,176
2021	685,990	45,186	731,176
2022	699,417	31,759	731,176
2023	713,107	22,476	735,583
2024	543,976	-	543,976
Total	$ 3,315,311	$ 157,777	$ 3,473,088

- **Capital Improvement Refunding Revenue Note, 2013**

In 2013 the County issued a promissory note for $7,340,000 to current refund $7,297,000 of the 2003 Series Capital Improvement Revenue Refunding Bonds, which were called on June 1, 2013.

Debt service is payable solely from proceeds of race track revenue distributed by the State from the Pari-mutual Tax Wagering Trust Fund, proceeds of the local government half-cent sales tax distributed by the State from the Local Government Half-Cent Sales Tax Clearing Trust Fund, and the "Guaranteed Entitlement" and "Second Guaranteed Entitlement for Counties" distributed by the State from the Revenue Sharing Trust Fund and interest earned in the debt service fund. Interest

and principal is payable monthly at 1.94% per annum and matures on June 1, 2024. The total principal and interest remaining to be paid is $4.2 million. This note is on parity with the 2015A Capital Improvement Refunding Revenue Bond; the 2015B Capital Improvement Revenue Bonds and the 2018 Capital Improvement Revenue Bond.

- **Capital Improvement Refunding Revenue Bond, Series 2015A**

In 2015 the County issued a bond for $28,602,982 to advance refund $27,475,000 of the 2006 Series Capital Improvement Revenue Refunding Bonds, which were called on June 1, 2016.

Debt service is payable solely from proceeds of race track revenue distributed by the State from the Pari-mutual Tax Wagering Trust Fund, proceeds of the local government half-cent sales tax distributed by the State from the Local Government Half-Cent Sales Tax Clearing Trust Fund, and the "Guaranteed Entitlement" and "Second Guaranteed Entitlement for Counties" distributed by the State from the Revenue Sharing Trust Fund and interest earned in the debt service fund. Interest and Principal is payable semiannually on June 1 and December 1 at 2.78% per annum and matures on June 1, 2034. This bond is on parity with the 2013 Capital Improvement Refunding Revenue Note; the 2015B Capital Improvement Revenue Bonds and the 2018 Capital Improvement Revenue Bond.

- **Capital Improvement Revenue Bonds, Series 2015B**

In 2015 the County issued $24,330,000 Sumter County Capital Improvement Revenue Bonds, Series 2015B to finance The Villages® Sumter County Public Safety Center, the Bushnell Sumter County Public Safety Center and paying the costs of issuance. The Bonds were issued with a $977,458 net premium so total funds received was $25,307,458.

Debt service is payable solely from proceeds of race track revenue distributed by the State from the Pari-mutual Tax Wagering Trust Fund, proceeds of the local government half-cent sales tax distributed by the State from the Local Government Half-Cent Sales Tax Clearing Trust Fund, and the "Guaranteed Entitlement" and "Second Guaranteed Entitlement for Counties" distributed by the State from the Revenue Sharing Trust Fund and interest earned in the debt service fund. Interest is payable semiannually on June 1 and December 1 at rates ranging from 3% to 5%. Principal is payable on June 1. Principal and interest are due through June 1, 2035. These bonds are on parity with the 2013 Capital Improvement Refunding Revenue Note; the 2015A Capital Improvement Refunding Revenue Bond and the 2018 Capital Improvement Revenue Bond.

- **Capital Improvement Revenue Bond, Series 2018**

In 2018 the County issued $30,066,000 Sumter County Capital Improvement Revenue Bond, Series 2018 to finance the Jail Expansion & Renovation Project, the Courthouse Improvements Project, the SR 44 Fire Station & Industrial Park Entrance Project and paying the costs of issuance.

Debt service is payable solely from proceeds of race track revenue distributed by the State from the Pari-mutual Tax Wagering Trust Fund, proceeds of the local government half-cent sales tax distributed by the State from the Local Government Half-Cent Sales Tax Clearing Trust Fund, and the "Guaranteed Entitlement" and "Second Guaranteed Entitlement for Counties" distributed by the State from the Revenue Sharing Trust Fund and interest earned in the debt service fund. Interest is payable semiannually on June 1 and December 1 at 2.96% per annum and matures on June 1, 2038. This bond is on parity with the 2013 Capital Improvement Refunding Revenue Note; the 2015A Capital Improvement Revenue Bonds and the 2015B Capital Improvement Revenue Bonds.

- **Agreement with The Villages® Companies**

In 2018 the County entered into an agreement with The Villages® Companies whereby The Villages® Companies will construct regionally significant roads in Sumter County that are the County's responsibility to build. The County will reimburse The Villages® Companies within five years of being invoiced.

At September 30, 2019, the total amount due to The Villages® Companies was $8,406,499. The first payment is due in September 2023. The County will fund the payments from available Non-Ad Valorem Revenues generated from Transportation Impact Fees and its apportioned Gas/Fuel Taxes. There are no interest charges associated with this agreement.

- **Bond Arbitrage**

The Federal Tax Reform Act of 1986 requires issuers of tax-exempt debt to make payments to the U.S. Treasury of investment income received at yields that exceed the issuer's tax-exempt borrowing rates or pay a calculated penalty. Rebates are paid to the Internal Revenue Service every fifth year after the year of issuance. Within the five-year period, any positive arbitrage (liability) can be offset by any negative arbitrage (non-liability). At September 30, 2019, the County has no arbitrage liability.

10. CHANGES IN LONG-TERM LIABILITIES

A summary of changes in long-term liabilities follows:

	Balance September 30 2018	Additions	Deductions	Balance September 30 2019	Due Within One Year
Bonds payable	$ 78,268,039	$ -	$ 2,903,686	$ 75,364,353	$ 2,899,697
Bond premium	818,621	-	48,873	769,748	-
Refunding revenue note	3,975,215	-	659,904	3,315,311	672,821
Total bonds payable	83,061,875	-	3,612,463	79,449,412	3,572,518
Lease purchase financing	1,802,638	-	1,802,638	-	-
Agreement with The Villages® Companies	1,975,646	6,430,853	-	8,406,499	-
Total OPEB liability	16,902,615	1,583,135	-	18,485,750	-
Compensated absences	4,104,900	2,742,000	2,789,000	4,057,900	1,962,000
Net pension liabiality - FRS & HIS	61,415,075	9,107,505	-	70,522,580	193,200
Totals	$ 169,262,750	$ 19,863,493	$ 8,204,101	$ 180,922,141	$ 5,727,718

11. STATE OF FLORIDA PENSION PLANS

Defined Benefit Plans

The County participates in two defined benefit pension plans that are administered by the State of Florida, Department of Management Services, Division of Retirement. The plans provide retirement, disability or death benefits to retirees or their designated beneficiaries. Chapter 121, Florida Statutes, establishes the authority for benefit provisions. Changes to the law can only occur through an act of the Florida Legislature. The State of Florida issues a publicly available financial report that includes financial statements and required supplementary information for the plans. That report is available from the Florida Department of Management Services' website (www.dms.myflorida.com).

The Florida Retirement System (FRS) Pension Plan is a cost-sharing, multiple-employer defined benefit pension plan with a Deferred Retirement Option Program (DROP) available for eligible employees. The FRS was established and is administered in accordance with Chapter 121, Florida Statutes. Retirees receive a lifetime pension benefit with joint and survivor payment options. FRS membership is compulsory for employees filling regularly established positions in a state agency, county agency, state university, state college, or district school board, unless restricted from FRS membership under Sections 121.053 or 121.122, Florida Statutes, or allowed to participate in a defined contribution plan in lieu of FRS membership. Participation by cities, municipalities, special districts, charter schools and metropolitan planning organizations is optional.
The Retiree Health Insurance Subsidy (HIS) Program is a cost-sharing, multiple-employer defined benefit pension plan established and administered in accordance with Section 112.363, Florida Statutes. The benefit is a monthly payment to assist retirees and surviving beneficiaries of the state-administered retirement systems in paying their health insurance costs. To be eligible to receive a HIS benefit, a retiree under a state administered retirement system must provide proof of eligible health insurance coverage, which can include Medicare.

Benefits Provided

Benefits under the FRS Pension Plan are computed on the basis of age and/or years of service, average final compensation, and service credit. Credit for each year of service is expressed as a percentage of the average final compensation. For members initially enrolled before July 1, 2011, the average final compensation is the average of the five highest fiscal years' earnings; for members initially enrolled on or after July 1, 2011, the average final compensation is the average of the eight highest fiscal years' earnings. The total percentage value of the benefit received is determined by calculating the total value of all service, which is based on the retirement plan and/or class to which the member belonged when the service credit was earned.

Eligible retirees and beneficiaries receive a monthly HIS payment equal to the number of years of service credited at retirement multiplied by $5. The minimum payment is $30 and the maximum payment is $150 per month, pursuant to Section 112.363, Florida Statutes.

Contributions

The contribution requirements of plan members and the employer are established and may be amended by the Florida Legislature. Employees are required to contribute 3.00% of their salary to the FRS Pension Plan. The employer's contribution rates as of September 30, 2019, were as follows:

	FRS	HIS
Regular Class	6.81%	1.66%
Special Risk Class	23.82%	1.66%
Senior Management Service Class	23.75%	1.66%
Elected Officials	47.16%	1.66%
DROP from FRS	12.94%	1.66%

The employer's contributions for the year ended September 30, 2019, were $4,472,551 to the FRS Pension Plan and $574,724 to the HIS Program.

Pension Liabilities and Pension Expense

In its financial statements for the year ended September 30, 2019, the County reported a liability for its proportionate share of the net pension liability of the FRS Pension Plan and its proportionate share of the net pension liability of the HIS Program. The net pension liabilities were measured as of June 30, 2019. The County's proportions of the net pension liabilities were based on its share of contributions to the pension plans relative to the contributions of all participating entities, actuarially determined.

	FRS	HIS
Net pension liability	$ 59,134,466	$ 11,388,114
Proportion at:		
Current Measurement Date	0.1717%	0.1018%
Prior Measurement Date	0.1684%	0.1011%
Pension expense (benefit)	$ 15,498,804	$ 1,040,990

The General Fund typically has been used in prior years to liquidate net pension liabilities.

Deferred Outflows/Inflows of Resources Related to Pensions

At September 30, 2019, the County reported deferred outflows of resources and deferred inflows of resources related to pensions from the following sources:

	FRS		HIS	
	Deferred Outflows of Resources	Deferred Inflows of Resources	Deferred Outflows of Resources	Deferred Inflows of Resources
Differences between expected and actual experience	$ 3,507,434	$ (36,698)	$ 138,321	$ (13,944)
Changes of assumptions	15,188,275	-	1,318,636	(930,772)
Net difference between projected and actual earnings on pension plan investments	-	(3,271,627)	7,349	-
Changes in proportion and differences between employer contributions and proportionate share of contributions	3,628,415	(418,683)	992,096	(246,036)
Employer contributions subsequent to the measurement date	1,504,650	-	154,831	-
Total	$ 23,828,774	$ (3,727,008)	$ 2,611,233	$ (1,190,752)

Deferred outflows of resources related to employer contributions paid subsequent to the measurement date and prior to the employer's fiscal year end will be recognized as a reduction of the net pension liability in the reporting period ending September 30, 2020. Other pension-related amounts reported as deferred outflows of resources and deferred inflows of resources will be recognized in pension expense as follows:

Year ending September 30,	FRS	HIS
2020	$ 6,572,092	$ 390,983
2021	2,607,108	348,072
2022	4,631,410	255,309
2023	3,469,545	53,020
2024	966,988	107,626
Thereafter	349,973	110,640
Total	$ 18,597,116	$ 1,265,650

Actuarial Assumptions

	FRS	HIS
Inflation	2.60%	2.60%
Salary increases	3.25%	3.25%
Investment rate of return	6.90%	N/A
Discount rate	6.90%	3.50%

Morality assumptions for the FRS Pension Plan were based on PUB2010 base tables projected generationally with Scale MP-2018. Mortality assumptions for the HIS Program were based on the Generational RP-2000 with Projection Scale BB.

For both plans, the actuarial assumptions were based on the results of an actuarial experience study for the period July 1, 2013, through June 30, 2018.

The following changes in key actuarial assumptions occurred in 2019:

FRS: The long-term expected rate of return and the discount rate used to determine the total pension liability decreased from 7.00% to 6.90%.

HIS: The municipal bond index rate and the discount rate used to determine the total pension liability decreased from 3.87% to 3.50%.

The long-term expected investment rate of return was not based on historical returns, but instead was based on a forward-looking capital market economic model. Each asset class assumption is based on a consistent set of underlying assumptions, and includes an adjustment for the inflation assumption. For the FRS Pension Plan, the table below summarizes the consulting actuary's assumptions based on the long-term target asset allocation.

Asset Class	Target Allocation	Arithmetic Return	Compound Annual (Geometric) Return
Cash	1%	3.3%	3.3%
Fixed income	18%	4.1%	4.1%
Global equity	54%	8.0%	6.8%
Real estate	10%	6.7%	6.1%
Private equity	11%	11.2%	8.4%
Strategic investments	6%	5.9%	5.7%
	100%		

Discount Rate

The discount rate used to measure the total pension liability for the FRS Pension Plan was 6.90%. FRS' fiduciary net position was projected to be available to make all projected future benefit payments of current active and inactive employees. Therefore, the discount rate for calculating the total pension liability is equal to the long-term expected rate of return.

Because the HIS Program is essentially funded on a pay-as-you-go basis, a municipal bond rate of 3.50% was used to determine the total pension liability for the program. The Bond Buyer General Obligation Bond 20-Bond Municipal Bond Index was used as the applicable municipal bond index.

Sensitivity Analysis

The following tables demonstrate the sensitivity of the net pension liability to changes in the discount rate. The sensitivity analysis shows the impact to the employer's proportionate share of the net pension liability if the discount rate was 1.00% higher or 1.00% lower than the current discount rate.

	FRS			HIS		
	1% Decrease (5.90%)	Current Discount Rate (6.90%)	1% increase (7.90%)	1% Decrease (2.50%)	Current Discount Rate (3.50%)	1% increase (4.50%)
Employer's proportionate share of the net pension liability	$ 102,223,800	$ 59,134,466	$23,147,584	$ 13,000,116	$ 11,388,114	$ 10,045,499

Pension Plans' Fiduciary Net Position

Detailed information about the pension plans' fiduciary net position is available in the State's separately issued financial reports.

Defined Contribution Plan

Pursuant to Chapter 121, Florida Statutes, the Florida Legislature created the Florida Retirement Investment Plan ("FRS Investment Plan"), a defined contribution pension plan qualified under Section 401(a) of the Internal Revenue Code. The FRS Investment Plan is an alternative available to members of the Florida Retirement System in lieu of the defined benefit plan. There is a uniform contribution rate covering both the defined benefit and defined contribution plans, depending on membership class. Required employer contributions made to the plan during the year ended September 30, 2019, totaled $2,374,359.

12. OTHER POSTEMPLOYMENT BENEFIT PLAN (OPEB)

The County provides certain health care benefits for retired employees and their dependents. Substantially all of the County's employees may become eligible for those benefits if they reach normal retirement age while working for the County.

Plan Description

Any employee of Sumter County who participates in and satisfies the vesting, disability, early or normal retirement provisions of the Florida Retirement System (FRS) may be eligible for certain Other Postemployment Benefits. The postemployment benefits include access to purchase coverage for retirees and dependents in the medical/prescription, dental and life insurance plans sponsored by the County. Retirees with less than six years of service contribute the entire premium rate. Otherwise, retirees contribute 75% of the premium rate, except for non-Medicare eligible with more than 10 years of service who contribute 50% of the premium rate. Dependents and survivors contribute the entire premium rate.

Eligible retirees may choose among the same medical plan options available for active employees of the County. Dependents of retirees may be covered at the retirees' option in the same way as dependents of active employees. Prescription drug coverage is automatically extended to retirees and their dependents who continue coverage under any one of the medical plan options. Covered retirees and their dependents are subject to all the same medical and prescription benefits and rules for coverage as active employees. Retirees and their dependents who are Medicare eligible are required to enroll for Parts A and B under Medicare.

Retiring employees who have enrolled in the retiree health insurance plan will also participate in the County sponsored group life policy. The cost of insurance to the retiree is $3.50 per month for a $25,000 policy. The amount of benefit is reduced to $12,500 when the retiree reaches age 70 and the premium is reduced to $1.75 per month.

As of October 1, 2018, the latest actuarial valuation date, plan participation consisted of 628 active participants and 84 retired participants receiving benefits. There are no inactive participants that are entitled to, but not yet receiving benefits.

A separate stand-alone financial statement is not prepared for the OPEB plan.

Funding Policy

The contribution requirements of the plan members and the County are established and may be amended by the Sumter County Board of County Commissioners. A trust has not been established. Contributions are being made based on pay-as-you-go financing requirements. The General Fund has typically been used in prior years to liquidate the OPEB liability.

OPEB Liabilities, OPEB Expense, and Deferred Outflows of Resources and Deferred Inflows of Resources Related to OPEB

The County implemented GASB 75 in fiscal year 2018. The County's reported its fiscal year 2018 OPEB liability based on the measurement date of September 30, 2017. Starting in fiscal year 2019, the County is reporting its OPEB liability based on a measurement date of September 30, 2019. This required a restatement of the OPEB liability and related deferred inflows and outflows as of September 30, 2018.

At September 30, 2019, the County reported deferred outflows of resources and deferred inflows of resources related to OPEB from the following sources:

Year ending September 30, 2019	Deferred Outflows of Resources	Deferred Inflows of Resources
Differences between expected and actual experience	$ -	$ 806,937
Changes of assumptions or other inputs	$ -	$ 1,449,570
Total	$ -	$ 2,256,507

OPEB-related amounts reported as deferred outflows of resources and deferred inflows of resources related to OPEB will be recognized in OPEB expense as follows:

Year ending September 30,	
2020	$ 210,531
2021	210,531
2022	210,531
2023	210,531
2024	210,531
Thereafter	1,203,852
Total	$ 2,256,507

Actuarial Assumptions and Other Inputs

Calculations of benefits for financial reporting purposes are based on the substantive plan (the plan understood by the employer and plan members) and include the types of benefits provided at the time of each valuation and the historical pattern of sharing of benefit cost between the employer and plan members to that point.

Actuarial valuations involve estimates of the values of reported amounts and assumptions about the probability of events far into the future, and actuarial determined amounts are subject to continual revision as actual results are compared to past expectations and new estimates are made about the future.

The total OPEB liability in the October 1, 2018 actuarial valuation was determined using the following actuarial assumptions and other inputs, applied to all periods included in the measurement, unless otherwise specified:

Inflation rate	2.25%	
Salary increases	3% annually	
Discount rate	3.25%	
Mortality	RP-2014	Mortality

	Fully Generational projected using Projection Scale MP-2018
Healthcare cost trend rate	6% initial trend rate dropping to 5% ultimate trend rate in year 2021

An actuarial experience study has not yet been performed for the plan.

Changes in the Total OPEB Liability

Total OPEB Liability:	
Service cost	$ 1,343,663
Interest	587,351
Changes of benefit terms	-
Differences between expected and actual experience	-
Changes of assumptions or other inputs	-
Benefit payments	(347,879)
Net change in total OPEB liability	1,583,135
Total OPEB liability, beginning	16,902,615
Total OPEB liability, ending	$ 18,485,750

Sensitivity of the Total OPEB Liability to Changes in the Discount Rate

The following presents the County's total OPEB liability, as well as what the County's total OPEB liability would be if it were calculated using a discount rate that is 1 percent lower or 1 percent higher than the current discount rate:

	1% Decrease (2.25%)	Current Discount Rate (3.25%)	1% increase (4.25%)
Total OPEB Liability	$ 22,237,588	$ 18,485,750	$ 15,570,010

Sensitivity of the Total OPEB Liability to Changes in the Healthcare Cost Trend Rate

The following presents the County's total OPEB liability, as well as what the County's total OPEB liability would be if it were calculated using healthcare cost trend rates that are 1 percent lower (6% decreasing to 4%) or 1 percent higher (8% decreasing to 6%) than the current healthcare cost trend rate:

	1% Decrease (6% decreasing to 4%)	Current Healthcare Cost Trend Rate (7% decreasing to 5%)	1% Increase (8% decreasing to 6%)
Total OPEB Liability	$ 15,513,275	$ 18,485,750	$ 22,759,005

13. RISK MANAGEMENT

Public Entity Risk Pool

The County is exposed to various risks of loss related to general liability, auto liability, collision and worker's compensation. To manage these risks, the County joined the Florida Association of Counties Trust and Preferred Governmental Insurance Trust (the "Trusts"), public entity risk pools currently operating as common risk management and insurance programs for several members. Premiums paid to the Trusts are designed to fund the risks assumed by the Trusts and are based on certain actual exposures of each member.

The Sheriff participates in the Florida Sheriffs' self-insurance fund for risk related to professional police and automobile liability. The Sheriff had no settlements that exceeded coverage in the 2019 fiscal year.

Commercial Insurance

The County carries commercial insurance for certain risks associated with property, inland marine and crime. Settled claims from these risks have not exceeded commercial insurance coverage in any of the past three fiscal years.

Self-Insurance

The County is exposed to various risks of loss related to employee health, dental and short-term disability claims for which it is self-insured. An excess coverage insurance policy covers individual claims in excess of $150,000 with a self funded liability of $136,000 with an unlimited lifetime maximum. There is an aggregate maximum reimbursement per policy period of $1,000,000. Settled claims have not exceeded this commercial coverage maximum in any of the past three fiscal years.

Liabilities are reported if information prior to the issuance of the financial statements indicated that it is probable that a liability has been incurred at the date of the financial statements and the amount of the loss can be reasonably estimated, including an estimate for those incurred but not reported (IBNRs). This estimate is based on historical experience and current trends, and is reported at current dollar value.

An Internal Service Fund (Group Insurance Fund) is used to account for the County's retained risk management activities. Changes in the Fund's claims liability were as follows:

	Beginning of year Liability	Claims Incurred	Claims Paid	End of Year Liability
2018	$ 798,364	$ 6,821,450	$ 6,417,988	$ 1,201,826
2019	$ 1,201,826	$ 7,881,494	$ 7,793,376	$ 1,289,944

14. CONDUIT DEBT OBLIGATIONS

The Industrial Development Authority has issued bonds to provide financial assistance to private-sector entities for the acquisition and construction of facilities deemed to be in the public interest.

The bonds are secured by the property financed and are payable solely from payments received on the underlying mortgage loans. Upon repayment of the bonds, ownership of the acquired facilities transfers to the private-sector entity served by the bond issuance. The County is not obligated in any manner for repayments of the bonds. Accordingly, the bonds are not reported as liabilities in the accompanying financial statements. As of September 30, 2019, the aggregate principal amount payable is not reasonably determinable.

15. RESTATEMENTS

- **– CHANGE IN ACCOUNTING PRINCIPLE**

The County restated beginning net position for governmental activities as follows to change the year of measurement for reporting the total OPEB liability:

Net OPEB liability	$820,004

- **– PRIOR PERIOD ADJUSTMENT**

The County restated beginning net position for governmental activities as follows to correct the prior year misstatement related to legal ownership of roads constructed by The Villages® Companies:

Capital assets – non-depreciable	$(353,526,584)
Capital assets – depreciable, net	(144,244,993)
Total	$(497,771,577)

- **– NET POSITION**

Net position – beginning of year, as previously reported	$770,875,075
Restatement for change in accounting principle	820,004
Prior period adjustment for capital assets	(497,771,577)
Net position – beginning of year, as restated	$273,923,502

16. COMMITMENTS AND CONTINGENCIES

The County is involved in lawsuits in the normal course of operations. It is the opinion of management and the County's attorneys that any unrecorded, uninsured claims resulting from such litigation would not be material in relation to the County's financial condition.

The County is actively securing rights-of-way for major road construction and expansions.

17. SUBSEQUENT EVENTS

In December 2019, the County issued the Series 2019 Bond, a 15-year tax-exempt bank loan in the amount of $22,580,000 for road and transportation related projects within the County.

In March 2020, the World Health Organization made the assessment that the outbreak of a novel coronavirus (COVID-19) can be characterized as a pandemic. As a result, uncertainties have arisen that may have a significant negative impact on the operating activities and results of the County. The occurrence and extent of such an impact will depend on future developments, including (i) the duration and spread of the virus, (ii) government quarantine measures, (iii) voluntary and precautionary restrictions on travel or meetings, (iv) the effects on the financial markets, and (v) the effects on the economy overall, all of which are uncertain.

18. FUTURE ACCOUNTING PRONOUNCEMENTS

The Governmental Accounting Standards Board has issued statements that will become effective in fiscal years 2020 and 2021. The statements address:

- Fiduciary Activities;
- Leases;
- Majority Equity Interests – an amendment of GASB Statements No. 14 and No. 61.

Sumter County is currently evaluating the effects that these statements will have on its future financial statements.

REQUIRED SUPPLEMENTARY INFORMATION

Sumter County, Florida
Schedule of Revenues, Expenditures, and Changes in Fund Balances - Budget and Actual
General Fund
For the Year Ended September 30, 2019

	Budgeted Amounts		Actual	Variance with Final Budget Positive
	Original	Final	Amounts	(Negative)
REVENUES				
Taxes	$ 71,510,512	$ 71,510,512	$ 75,531,961	$ 4,021,449
Permits, Fees and Special Assessments	7,685,050	7,830,165	8,249,021	418,856
Intergovernmental	826,446	845,067	1,456,472	611,405
Charges for Services	4,461,463	4,465,063	5,365,505	900,442
Fines and Forfeitures	22,450	22,450	17,225	(5,225)
Miscellaneous	191,652	243,325	2,893,121	2,649,796
TOTAL REVENUES	84,697,573	84,916,582	93,513,305	8,596,723
EXPENDITURES				
Current:				
General Government	16,663,437	17,054,956	14,401,083	2,653,873
Public Safety	58,172,211	60,374,351	62,135,014	(1,760,663)
Physical Environment	2,438,642	2,809,314	2,452,336	356,978
Transportation	873,425	1,012,433	1,943,775	(931,342)
Economic Environment	1,145,877	1,312,533	1,202,013	110,520
Human Services	4,587,149	4,874,447	4,244,733	629,714
Culture and Recreation	3,895,882	3,966,814	4,234,915	(268,101)
Court Related	1,919,239	1,917,526	1,694,729	222,797
Reserve for contingencies	19,324,096	18,437,493	-	18,437,493
Debt service:				
Principal retirement	1,769,305	1,769,305	1,802,638	(33,333)
Interest and fiscal charges	67,296	67,296	33,962	33,334
TOTAL EXPENDITURES	110,856,559	113,596,468	94,145,198	19,451,270
EXCESS OF REVENUES OVER (UNDER) EXPENDITURES	(26,158,986)	(28,679,886)	(631,893)	28,047,993
OTHER FINANCING SOURCES (USES)				
Transfers In	5,114,522	6,362,863	5,199,983	(1,162,880)
Transfers Out	(2,557,278)	(6,377,048)	(5,006,826)	1,370,222
TOTAL OTHER FINANCING SOURCES (USES)	2,557,244	(14,185)	193,157	207,342
NET CHANGE IN FUND BALANCES	(23,601,742)	(28,694,071)	(438,736)	28,255,335
FUND BALANCES – BEGINNING OF YEAR	23,601,742	28,694,071	30,970,253	2,276,182
FUND BALANCES – END OF YEAR	$ -	$ -	$ 30,531,517	$ 30,531,517

Notes to Budgetary Comparison Schedule

The preparation, adoption, and amendment of the budgets are governed by Florida Statutes. The fund is the legal level of control. Budgets are prepared and adopted on a basis that does not differ materially from generally accepted accounting principles (GAAP).

Sumter County, Florida
Schedule of Revenues, Expenditures and Changes in Fund Balances - Budget and Actual
SHIP Fund
For the Year Ended September 30, 2019

	Budgeted Amounts		Actual Amounts	Variance with Final Budget Positive (Negative)
	Original	Final		
REVENUES				
Intergovernmental	$ -	$ -	$ 350,000	$ 350,000
Miscellaneous	72,200	72,200	223,137	150,937
TOTAL REVENUES	72,200	72,200	573,137	500,937
EXPENDITURES				
Current:				
Economic environment	216,200	483,826	687,737	(203,911)
NET CHANGE IN FUND BALANCES	(144,000)	(411,626)	(114,600)	297,026
FUND BALANCES – BEGINNING OF YEAR	144,000	411,626	431,279	19,653
FUND BALANCES – END OF YEAR	$ -	$ -	$ 316,679	$ 316,679

Notes to Budgetary Comparison Schedule

The preparation, adoption, and amendment of the budgets are governed by Florida Statutes. The fund is the legal level of control. Budgets are prepared and adopted on a basis that does not differ materially from generally accepted accounting principles (GAAP).

Sumter County, Florida
Schedule of Revenues, Expenditures and Changes in Fund Balances - Budget and Actual
Building Services Fund
For the Year Ended September 30, 2019

	Budgeted Amounts			Variance with Final Budget Positive (Negative)
	Original	Final	Actual	
REVENUES				
Permits, fees and special assessments	$ 1,949,911	$ 1,949,911	$ 2,119,781	$ 169,870
Charges for services	7,000	7,000	7,112	112
Miscellaneous	11,000	11,000	90,047	79,047
TOTAL REVENUES	1,967,911	1,967,911	2,216,940	249,029
EXPENDITURES				
Current:				
Transportation:				
Road construction	2,841,330	2,841,330	2,667,680	173,650
DEFICIENCY OF REVENUES UNDER EXPENDITURES	(873,419)	(873,419)	(450,740)	422,679
OTHER FINANCING SOURCES				
Transfer in	20,000	20,000	22,235	2,235
NET CHANGE IN FUND BALANCES	(853,419)	(853,419)	(428,505)	424,914
FUND BALANCES – BEGINNING OF YEAR	1,469,134	1,508,658	1,863,372	354,714
FUND BALANCES – END OF YEAR	$ 615,715	$ 655,239	$ 1,434,867	$ 779,628

Notes to Budgetary Comparison Schedule

The preparation, adoption, and amendment of the budgets are governed by Florida Statutes. The fund is the legal level of control. Budgets are prepared and adopted on a basis that does not differ materially from generally accepted accounting principles (GAAP).

Sumter County, Florida
Schedule of Changes in the County's
Total OPEB Liability and Related Ratios

Last Ten Fiscal Years

	2019	2018
Total OPEB liability		
Service cost	$ 1,343,663	$ 1,448,124
Interest	587,350	532,061
Changes of benefit terms	-	-
Differences between expected and actual experience	-	(878,251)
Changes of assumptions or other inputs	-	(1,584,791)
Benefit payments	(347,879)	(337,148)
Net change in total OPEB liability	1,583,134	(820,005)
Total OPEB liability - beginning	16,902,616	17,722,621
Total OPEB liability - ending	$ 18,485,750	$ 16,902,616
Covered-employee payroll	$ 34,621,940	$ 32,858,562
Total OPEB liability as a percentage of covered-employee payroll	53.39%	51.44%

Notes to Schedule:

The County implemented GASB 75 in fiscal year 2018. Until a full 10-year trend is compiled, information is presented for those years for which information is available

Sumter County, Florida
Florida Retirement System (FRS) Defined Benefit Pension Plan

Last Ten Fiscal Years

Schedule of County's Proportionate Share of the Net Pension Liability

	2019	2018	2017	2016	2015
County's proportion of the net pension liability	0.1717%	0.1684%	0.1601%	0.1543%	0.1368%
County's proportionate share of the net pension liability	$ 59,134,466	$ 50,709,815	$ 47,355,349	$ 38,955,000	$ 17,666,438
County's covered payroll	34,058,660	33,035,088	30,323,520	27,322,825	28,234,687
County's proportionate share of the net pension liability as a percentage of its covered payroll	173.63%	153.50%	156.17%	142.57%	62.57%
Plan fiduciary net position as a percentage of the total pension liability	82.61%	84.26%	83.89%	84.88%	92.00%
Plan sponsor measurement date	June 30, 2019	June 30, 2018	June 30, 2017	June 30, 2016	June 30, 2015

Notes:

The County implemented GASB Statement No. 68 for the fiscal year ended September 30, 2015.
Information for prior years is not available

Schedule of County's Contributions

	2019	2018	2017	2016	2015
Contractually required contribution	$ 4,742,551	$ 4,132,593	$ 4,167,695	$ 4,079,811	$ 3,440,834
Contribution in relation to the contractually required contribution	4,742,551	4,132,593	4,167,695	4,079,811	3,440,834
Contribution deficiency (excess)	$ -	$ -	$ -	$ -	$ -
County's covered payroll	34,621,940	32,858,562	31,267,720	27,072,582	28,691,349
Contributions as a percentage of covered payroll	13.70%	12.58%	13.33%	15.07%	11.99%

Notes:

The County implemented GASB Statement No. 68 for the fiscal year ended September 30, 2015.
Information for prior years is not available

Sumter County, Florida
Florida Retirement System (FRS) Health Insurance Subsidy (HIS) Defined Benefit Pension Plan

Last Ten Fiscal Years

Schedule of County's Proportionate Share of the Net Pension Liability (HIS)

	2019	2018	2017	2016	2015
County's proportion of the net pension liability	0.1011%	0.1011%	0.0953%	0.0933%	0.0907%
County's proportionate share of the net pension liability	$ 11,388,114	$ 10,705,260	$ 10,186,887	$10,871,191	$ 9,250,206
County's covered payroll	34,058,660	33,035,088	30,323,520	27,322,825	28,234,687
County's proportionate share of the net pension liability as a percentage of its covered payroll	33.44%	32.41%	33.59%	39.79%	32.76%
Plan fiduciary net position as a percentage of the total pension liability	2.63%	2.15%	1.64%	0.97%	0.50%
Plan sponsor measurement date	June 30, 2019	June 30, 2018	June 30, 2017	June 30, 2016	June 30, 2015

Notes:

The County implemented GASB Statement No. 68 for the fiscal year ended September 30, 2015.
Information for prior years is not available

Schedule of County's Contributions (HIS)

	2019	2018	2017	2016	2015
Contractually required contribution	$ 574,724	$ 542,994	$ 504,205	$ 498,531	$ 377,398
Contribution in relation to the contractually required contribution	574,724	542,994	504,205	498,531	377,398
Contribution deficiency (excess)	$ -	$ -	$ -	$ -	$ -
County's covered payroll	34,621,940	32,858,562	31,267,720	27,072,582	28,691,349
Contributions as a percentage of covered payroll	1.66%	1.65%	1.61%	1.84%	1.32%

Notes:

The County implemented GASB Statement No. 68 for the fiscal year ended September 30, 2015.
Information for prior years is not available

Supplementary Information

Description of General Fund By Category

The six categories shown below together represent the General Fund, the primary operating fund of the County.

General Fund – Board of County Commissioners – To account for revenues and expenditures of the Board of County Commissioners portion of the General Fund – which are activities that benefit all County residents. Countywide activities include Administration, Public Works, Planning, Fire Services, Community Services, and certain payments to Constitutional Officers.

General Fund - Sheriff – To account for revenues and expenditures necessary to carry out the duties and obligations of the Sheriff as specified in Section 30.15, Florida Statutes. The funds for the Sheriff's operation are received from the BOCC pursuant to Section 30.49, Florida Statutes.

General Fund – Clerk of Circuit Court – To account for revenues and expenditures of the Clerk of Circuit Court whose responsibilities include: County recorder for official records of Sumter County; accountant for the BOCC, custodian of all County funds, County auditor, and keeping BOCC records and meeting minutes as ex-officio Clerk to the Board of County Commissioners; as well as court-related activities that are not accounted for in the "Clerk of Circuit Court – Court Fund and Public Records Modernization Funds."

General Fund – Tax Collector – To account for revenues and expenditures of the Tax Collector pursuant to Section 197, Florida Statutes.

General Fund – Property Appraiser – To account for revenues and expenditures of the Property Appraiser in the performance of Constitutional responsibilities. The duties of the Property Appraiser are governed by the Florida Constitution s. 4, Art. VII, Florida Statutes, and the Rules and Regulations of the Florida Department of Revenue. These responsibilities include determining the taxable value of all real and tangible property within the County, maintaining associated financial and property records, and providing the Tax Collector with the certified value of real and tangible property and tax millage levied by the respective taxing authorities.

General Fund – Supervisor of Elections – To account for revenues and expenditures of the Supervisor of Elections in the performance of Constitutional responsibilities pursuant to Chapters 97 and 102, Florida Statutes. The funds for the Supervisor of Elections' operation are received from the BOCC pursuant to Section 129.202, Florida Statutes.

Sumter County, Florida
Combining Balance Sheet
Board and Officers General Funds
September 30, 2019

(Continued)

	BOCC General Sub-fund	Sheriff Sub-fund	Clerk of Circuit Court Sub-fund	Tax Collector Sub-fund
ASSETS				
Cash and equivalents	$ 14,183,130	$ 1,875,546	$ 430,147	$ 226,582
Investments	14,386,209	-	-	-
Due from other funds	2,396,458	165,554	-	-
Due from other governments	1,737,412	156,783	5,060	-
Receivables	46,247	26,701	-	-
Prepaid expenses	127,717	-	-	-
TOTAL ASSETS	$ 32,877,173	$ 2,224,584	$ 435,207	$ 226,582
LIABILITIES				
Accounts payable and accrued liabilities	$ 1,928,405	$ 918,199	$ 54,736	$ 53,359
Due to other funds	388,119	1,306,385	374,880	173,223
TOTAL LIABILITIES	2,316,524	2,224,584	429,616	226,582
DEFFERED INFLOWS				
Unavailable revenue	49,284	-	-	-
FUND BALANCES				
Nonspendable:				
Prepaid expenses	127,717	-	-	-
Restricted for:				
Teen Court		-	5,591	-
Library Material	124,522	-	-	-
Supervisor of Elections - Grant	-	-	-	-
Public Safety	-	-	-	-
Assigned for:				
Subsequent year's budget	24,500,000	-	-	-
Unassigned:				
General fund	5,759,126	-	-	-
TOTAL FUND BALANCES	30,511,365	-	5,591	-
TOTAL LIABILITIES, DEFERRED INFLOWS AND FUND BALANCES	$ 32,877,173	$ 2,224,584	$ 435,207	$ 226,582

Sumter County, Florida
Combining Balance Sheet
Board and Officers General Funds
September 30, 2019

(Concluded)

	Property Appraiser General Sub-fund	Supervisor of Elections General Sub-fund	Interfund Eliminations & Consolidations	Total General Fund
ASSETS				
Cash and equivalents	$ 152,478	$ 135,705	$ -	$ 17,003,588
Investments	-	-	-	14,386,209
Due from other funds	-	-	(2,260,724)	301,288
Due from other governments	43	-	-	1,899,298
Receivables	-	-	-	72,948
Prepaid expenses	-	-	-	127,717
TOTAL ASSETS	$ 152,521	$ 135,705	$ (2,260,724)	$ 33,791,048
LIABILITIES				
Accounts payable and accrued liabilities	$ 68,979	$ 24,282	$ -	$ 3,047,960
Due to other funds	83,542	96,862	(2,260,724)	162,287
TOTAL LIABILITIES	152,521	121,144	(2,260,724)	3,210,247
DEFFERED INFLOWS				
Unavailable revenue	-	-	-	49,284
FUND BALANCES				
Nonspendable:				
Prepaid expenses	-	-	-	127,717
Restricted for:				
Teen court	-	-	-	5,591
Library material	-	-	-	124,522
Supervisor of Elections - Grant	-	14,561	-	14,561
Public Safety	-	-	-	-
Assigned for:				
Subsequent year's budget	-	-	-	24,500,000
Unassigned:				
General fund	-	-	-	5,759,126
TOTAL FUND BALANCES	-	14,561	-	30,531,517
TOTAL LIABILITIES, DEFERRED INFLOWS AND FUND BALANCES	$ 152,521	$ 135,705	$ (2,260,724)	$ 33,791,048

Sumter County, Florida
Combining Schedule of Revenues, Expenditures, and Changes in Fund Balances - Budget and Actual
Board and Officers General Funds
For the Year Ended September 30, 2019

(Continued)

	BOCC General Sub-fund			Sheriff General Sub-fund		
	Budgeted Amounts		Actual	Budgeted Amounts		Actual
	Original	Final	Amounts	Original	Final	Amounts
REVENUES						
Taxes	$ 71,510,512	$ 71,510,512	$ 75,531,962	$ -	$ -	$ -
Permits, Fees & Special Assessments	7,685,050	7,830,165	8,249,021	-	-	-
Intergovernmental	826,446	845,067	1,345,994	-	-	76,065
Charges for Services	4,423,031	4,426,631	5,326,329	-	-	-
Fines and Forfeitures	22,450	22,450	17,225	-	-	-
Miscellaneous	191,652	243,325	2,437,240	-	-	455,880
TOTAL REVENUES	84,659,141	84,878,150	92,907,771	-	-	531,945
EXPENDITURES						
Current:						
General Government	9,080,457	9,471,976	7,281,162	-	-	-
Public Safety	26,721,793	28,923,933	30,815,066	31,450,418	31,450,418	31,319,948
Physical Environment	2,438,642	2,809,314	2,452,336	-	-	-
Transportation	873,425	1,012,433	1,943,775	-	-	-
Economic Environment	1,145,877	1,312,533	1,202,013	-	-	-
Human Services	4,587,149	4,874,447	4,244,733	-	-	-
Culture and Recreation	3,895,882	3,966,814	4,234,915	-	-	-
Court Related	584,632	582,919	368,639	1,300,416	1,300,416	1,292,302
Reserve for contingencies	19,324,096	18,437,493	-	-	-	-
Debt service:						
Principal retirement	1,769,305	1,769,305	1,802,638	-	-	-
Interest and fiscal charges	67,296	67,296	33,962	-	-	-
TOTAL EXPENDITURES	70,488,554	73,228,463	54,379,239	32,750,834	32,750,834	32,612,250
EXCESS OF REVENUES OVER (UNDER) EXPENDITURES	14,170,587	11,649,687	38,528,532	(32,750,834)	(32,750,834)	(32,080,305)
OTHER FINANCING SOURCES (USES)						
Transfers In	5,114,522	6,362,863	6,263,514	32,750,834	32,750,834	32,725,099
Transfers Out	(42,787,241)	(46,607,011)	(45,129,846)	-	-	(656,232)
TOTAL OTHER FINANCING SOURCES (USES)	(37,672,719)	(40,244,148)	(38,866,332)	32,750,834	32,750,834	32,068,867
NET CHANGE IN FUND BALANCES	(23,502,132)	(28,594,461)	(337,800)	-	-	(11,438)
FUND BALANCES – BEGINNING OF YEAR	23,502,132	28,594,461	30,849,165	-	-	11,438
FUND BALANCES – END OF YEAR	$ -	$ -	$ 30,511,365	$ -	$ -	$ -

Sumter County, Florida
Combining Schedule of Revenues, Expenc
and Changes in Fund Balances - Budget an
Board and Officers General Funds
For the Year Ended September 30, 20

(Continued)

	Clerk of the Circuit Court Sub-fund			Tax Collector Sub-fund		
	Budgeted Amounts		Actual	Budgeted Amounts		Actual
	Original	Final	Amounts	Original	Final	Amounts
REVENUES						
Taxes	$ -	$ -	$ -	$ -	$ -	$ -
Permits, Fees and Special Assessments	-	-	-	-	-	-
Intergovernmental	-	-	-	-	-	-
Charges for Services	-	-	-	-	-	-
Fines and Forfeitures	-	-	-	-	-	-
Miscellaneous	-	-	-	-	-	-
TOTAL REVENUES	-	-	-	-	-	-
EXPENDITURES						
Current:						
General Government	1,808,874	1,808,874	1,678,846	2,337,921	2,337,921	2,164,698
Public Safety	-	-	-		-	
Physical Environment	-	-	-	-	-	-
Transportation	-	-	-	-	-	-
Economic Environment	-	-	-	-	-	-
Human Services	-	-	-	-	-	-
Culture and Recreation	-	-	-	-	-	-
Court Related	34,191	34,191	33,788	-	-	-
Reserve for contingencies	-	-	-	-	-	-
Debt service:						
Principal retirement	-	-	-	-	-	-
Interest and fiscal charges	-	-	-	-	-	-
TOTAL EXPENDITURES	1,843,065	1,843,065	1,712,634	2,337,921	2,337,921	2,164,698
EXCESS OF REVENUES OVER (UNDER) EXPENDITURES	(1,843,065)	(1,843,065)	(1,712,634)	(2,337,921)	(2,337,921)	(2,164,698)
OTHER FINANCING SOURCES (USES)						
Transfers In	1,843,065	1,843,065	1,838,213	2,337,921	2,337,921	2,337,921
Transfers Out	-	-	(130,028)	-	-	(173,223)
TOTAL OTHER FINANCING SOURCES (USES)	1,843,065	1,843,065	1,708,185	2,337,921	2,337,921	2,164,698
NET CHANGE IN FUND BALANCES	-	-	(4,449)	-	-	-
FUND BALANCES – BEGINNING OF YEAR	-	-	10,040	-	-	-
FUND BALANCES – END OF YEAR	$ -	$ -	$ 5,591	$ -	$ -	$ -

Sumter County, Florida
Combining Schedule of Revenues, Expenditures, and Changes in Fund Balances - Budget and Actual
Board and Officers General Funds
For the Year Ended September 30, 2019

(Continued)

	Property Appraiser Sub-fund			Supervisor of Elections Sub-fund		
	Budgeted Amounts		Actual	Budgeted Amounts		Actual
	Original	Final	Amounts	Original	Final	Amounts
REVENUES						
Taxes	$ -	$ -	$ -	$ -	$ -	$ -
Permits, Fees and Special Assessments	-	-	-	-	-	-
Intergovernmental	-	-	-	-	-	34,413
Charges for Services	38,432	38,432	39,176	-	-	-
Fines and Forfeitures	-	-	-	-	-	-
Miscellaneous	-	-	-	-	-	-
TOTAL REVENUES	38,432	38,432	39,176	-	-	34,413
EXPENDITURES						
Current:						
General Government	1,591,072	1,591,072	1,508,274	1,845,113	1,845,113	1,768,103
Public Safety	-	-	-	-	-	-
Physical Environment	-	-	-	-	-	-
Transportation	-	-	-	-	-	-
Economic Environment	-	-	-	-	-	-
Human Services	-	-	-	-	-	-
Culture and Recreation	-	-	-	-	-	-
Court Related	-	-	-	-	-	-
Reserve for contingencies	-	-	-	-	-	-
Debt service:						
Principal retirement	-	-	-	-	-	-
Interest and fiscal charges	-	-	-	-	-	-
TOTAL EXPENDITURES	1,591,072	1,591,072	1,508,274	1,845,113	1,845,113	1,768,103
EXCESS OF REVENUES OVER (UNDER) EXPENDITURES	(1,552,640)	(1,552,640)	(1,469,098)	(1,845,113)	(1,845,113)	(1,733,690)
OTHER FINANCING SOURCES (USES)						
Transfers In	1,552,640	1,552,640	1,552,640	1,745,503	1,745,503	1,745,503
Transfers Out	-	-	(83,542)	-	-	(96,862)
TOTAL OTHER FINANCING SOURCES (USES)	1,552,640	1,552,640	1,469,098	1,745,503	1,745,503	1,648,641
NET CHANGE IN FUND BALANCES	-	-	-	(99,610)	(99,610)	(85,049)
FUND BALANCES – BEGINNING OF YEAR	-	-	-	99,610	99,610	99,610
FUND BALANCES – END OF YEAR	$ -	$ -	$ -	$ -	$ -	$ 14,561

Sumter County, Florida
Combining Schedule of Revenues, Expenditures, and Changes in Fund Balances - Budget and Actual
Board and Officers General Funds
For the Year Ended September 30, 2019

(Continued)

	Subtotals			Interfund Eliminations and Consolidations		
	Budgeted Amounts		Actual	Budgeted Amounts		Actual
	Original	Final	Amounts	Original	Final	Amounts
REVENUES						
Taxes	$ 71,510,512	$ 71,510,512	$ 75,531,962	$ -	$ -	$ -
Permits, Fees and Special Assessments	7,685,050	7,830,165	8,249,021	-	-	-
Intergovernmental	826,446	845,067	1,456,472	-	-	-
Charges for Services	4,461,463	4,465,063	5,365,505	-	-	-
Fines and Forfeitures	22,450	22,450	17,225	-	-	-
Miscellaneous	191,652	243,325	2,893,120	-	-	-
TOTAL REVENUES	84,697,573	84,916,582	93,513,305	-	-	-
EXPENDITURES						
Current:						
General Government	16,663,437	17,054,956	14,401,083	-	-	-
Public Safety	58,172,211	60,374,351	62,135,014	-	-	-
Physical Environment	2,438,642	2,809,314	2,452,336	-	-	-
Transportation	873,425	1,012,433	1,943,775	-	-	-
Economic Environment	1,145,877	1,312,533	1,202,013	-	-	-
Human Services	4,587,149	4,874,447	4,244,733	-	-	-
Culture and Recreation	3,895,882	3,966,814	4,234,915	-	-	-
Court Related	1,919,239	1,917,526	1,694,729	-	-	-
Reserve for contingencies	19,324,096	18,437,493	-	-	-	-
Debt service:						
Principal retirement	1,769,305	1,769,305	1,802,638	-	-	-
Interest and fiscal charges	67,296	67,296	33,962	-	-	-
TOTAL EXPENDITURES	110,856,559	113,596,468	94,145,198	-	-	-
EXCESS OF REVENUES OVER (UNDER) EXPENDITURES	(26,158,986)	(28,679,886)	(631,893)	-	-	-
OTHER FINANCING SOURCES (USES)						
Transfers In	45,344,485	46,592,826	46,462,890	(40,229,963)	(40,229,963)	(41,262,907)
Transfers Out	(42,787,241)	(46,607,011)	(46,269,733)	40,229,963	40,229,963	41,262,907
TOTAL OTHER FINANCING SOURCES (USES)	2,557,244	(14,185)	193,157	-	-	-
NET CHANGE IN FUND BALANCES	(23,601,742)	(28,694,071)	(438,736)	-	-	-
FUND BALANCES – BEGINNING OF YEAR	23,601,742	28,694,071	30,970,253	-	-	-
FUND BALANCES – END OF YEAR	$ -	$ -	$ 30,531,517	$ -	$ -	$ -

Sumter County, Florida
Combining Schedule of Revenues, Expenditures, and Changes in Fund Balances - Budget and Actual
Board and Officers General Funds
For the Year Ended September 30, 2019

(Concluded)

	Totals			
	Budgeted Amounts		Actual	Variance with Final Budget Positive
	Original	Final	Amounts	(Negative)
REVENUES				
Taxes	$ 71,510,512	$ 71,510,512	$ 75,531,962	$ 4,021,450
Permits, Fees and Special Assessments	7,685,050	7,830,165	8,249,021	418,856
Intergovernmental	826,446	845,067	1,456,472	611,405
Charges for Services	4,461,463	4,465,063	5,365,505	900,442
Fines and Forfeitures	22,450	22,450	17,225	(5,225)
Miscellaneous	191,652	243,325	2,893,120	2,649,795
TOTAL REVENUES	84,697,573	84,916,582	93,513,305	8,596,723
EXPENDITURES				
Current:				
General Government	16,663,437	17,054,956	14,401,083	2,653,873
Public Safety	58,172,211	60,374,351	62,135,014	(1,760,663)
Physical Environment	2,438,642	2,809,314	2,452,336	356,978
Transportation	873,425	1,012,433	1,943,775	(931,342)
Economic Environment	1,145,877	1,312,533	1,202,013	110,520
Human Services	4,587,149	4,874,447	4,244,733	629,714
Culture and Recreation	3,895,882	3,966,814	4,234,915	(268,101)
Court Related	1,919,239	1,917,526	1,694,729	222,797
Reserve for contingencies	19,324,096	18,437,493	-	18,437,493
Debt service:				
Principal retirement	1,769,305	1,769,305	1,802,638	(33,333)
Interest and fiscal charges	67,296	67,296	33,962	33,334
TOTAL EXPENDITURES	110,856,559	113,596,468	94,145,198	19,451,270
EXCESS OF REVENUES OVER (UNDER) EXPENDITURES	(26,158,986)	(28,679,886)	(631,893)	28,047,993
OTHER FINANCING SOURCES (USES)				
Transfers In	5,114,522	6,362,863	5,199,983	(1,162,880)
Transfers Out	(2,557,278)	(6,377,048)	(5,006,826)	1,370,222
TOTAL OTHER FINANCING SOURCES (USES)	2,557,244	(14,185)	193,157	207,342
NET CHANGE IN FUND BALANCES	(23,601,742)	(28,694,071)	(438,736)	28,255,335
FUND BALANCES – BEGINNING OF YEAR	23,601,742	28,694,071	30,970,253	2,276,182
FUND BALANCES – END OF YEAR	$ -	$ -	$ 30,531,517	$ 30,531,517

Description of Non-major Governmental Funds

Special Revenue Funds

Special Revenue Funds are used to account for and report the proceeds of specific revenue sources that are restricted or committed for specific purposes other than debt service or capital projects.

Small Grants Fund – To account for revenues and expenditures associated with various small grants

Law Enforcement Trust Fund – To account for the proceeds from the sale of forfeited property to be expended for law enforcement purposes

Road Impact Fee Fund – To accumulate resources from developers and citizens to fund the construction of roads and the acquisition of rights-of-way as designated in the County's Impact Fee Ordinance. Financing is provided by the levy and collection of impact fees.

911 Emergency Telephone System Fund – To account for revenues and expenditures associated with the 911 emergency telephone system

Anti-Drug Abuse Fund – To account for programs to curb drug trafficking

County Transit Fund – To account for providing transportation services for County residents

Boating Improvement Fund – To account for boating registration fees that are used to enhance local recreational boating needs

Police Education Fund – To account for revenues and expenditures associated with providing criminal justice education and training

Sheriff's Victim's Advocacy Grant Fund – To account for revenues and expenditures associated with the victim's advocacy grant (Does not have a budget)

Alcohol and Drug Abuse Fund – To account for revenues and expenditures associated with funding local drug and alcohol abuse treatment programs and education

Court Improvement Fund – To account for revenues and expenditures associated with funding improvements to the County's court facilities

Secondary Trust Fund – To account for the 80% portion constructional gas tax revenue and expenditures related to the maintenance of county roads.

Crime Prevention Fund – To account for revenues and expenditures associated with crime prevention programs

County Transportation Trust Fund – To account for revenues and expenditures associated with the maintenance of County roads and traffic signs and signals

Court Local Requirements Fund – To account for revenues and expenditures associated with court innovations, legal aid, law library and juvenile alternative programs

Court Technology Fund – To account for revenues and expenditures associated with court related communications and facilities

Tourist Development Fund- To account for funds received from the tourist development tax and expended for promoting direct and indirect tourism projects

Sheriff Inmate Welfare Fund – To account for the Sheriff's canteen fund.

Sheriff Federal Shared Fund – To account for federal shared funds. (Does not have a budget)

Clerk Records Modernization Fund – To account for funds used to modernize records

Clerk Fine and Forfeiture Fund – To account for Clerk's court operating budget

Clerk Court Technology Fund – To account for Clerk's court related technology improvements

Debt Service Fund

Debt Service Fund is used to account for resources accumulated for the payment of principal and interest of long-term liabilities.

Sinking Fund – To account for the principal and interest payments of the 2013 Capital Improvement Refunding Revenue note, the 2015A Capital Improvement Refunding Revenue bond and the 2015B Capital Improvement Revenue bonds primarily from half-cent sales tax proceeds and earnings on temporary investments

Sumter County, Florida
Combining Balance Sheet – Non-major Governmental Funds
September 30, 2019
(Continued)

	Special Revenue Funds			
	Small Grants Fund	Law Enforcement Trust Fund	Road Impact Fee Fund	911 Emergency Telephone System Fund
ASSETS				
Cash and equivalents	$ 29,040	$ -	$ 231,888	$ 102,613
Investments	699	-	3,252,434	321,422
Due from other funds	-	-	-	-
Due from other governments	20	-	-	93,644
Receivables	-	-	46,500	-
TOTAL ASSETS	$ 29,759	$ -	$ 3,530,822	$ 517,679
LIABILITIES				
Accounts payable and accrued liabilities	$ 450	$ -	$ 890,487	$ 29,319
Due to other funds	-	-	-	2,249
TOTAL LIABILITIES	450	-	890,487	31,568
DEFERRED INFLOWS				
Unavailable revenue	-	-	-	46,045
FUND BALANCES				
Restricted for:				
Records modernization	-	-	-	-
Public safety	-	-	-	435,057
Transportation	-	-	2,243,742	-
Anti-drug abuse	-	-	-	-
Boating Improvements	-	-	-	-
Physical environment	28,892	-	-	-
Tourist development	-	-	-	-
Court related	-	-	-	-
Debt service	-	-	-	-
Assigned for:				
Public safety	-	-	-	5,009
Transportation	-	-	396,593	-
Physical environment	417	-	-	-
Court related	-	-	-	-
TOTAL FUND BALANCES	29,309	-	2,640,335	440,066
TOTAL LIABILITIES, DEFERRED INFLOWS AND FUND BALANCES	$ 29,759	$ -	$ 3,530,822	$ 471,634

Sumter County, Florida
Combining Balance Sheet – Non-major Governmental Funds
September 30, 2019

(Continued)

	Special Revenue Funds			
	Anti-Drug Abuse Fund	County Transit Fund	Boating Improvement Fund	Police Education Fund
ASSETS				
Cash and equivalents	$ 1,897	$ 83,985	$ 21,207	$ 22,277
Investments	252	3,006	102,050	117,802
Due from other funds	-	-	1,348	58
Due from other governments	-	259,081	-	-
Receivables	-	6,667	-	-
TOTAL ASSETS	$ 2,149	$ 352,739	$ 124,605	$ 140,137
LIABILITIES				
Accounts payable and accrued liabilities	$ -	$ 117,353	$ 6,753	$ -
Due to other funds	-	-	-	-
TOTAL LIABILITIES	-	117,353	6,753	-
DEFERRED INFLOWS				
Unavailable revenue	-	197,508	-	-
FUND BALANCES				
Restricted for:				
Records modernization	-	-	-	-
Public safety	-	-	-	135,470
Transportation	-	-	-	-
Anti-drug abuse	2,089	-	-	-
Boating improvements	-	-	113,992	-
Physical environment	-	-	-	-
Tourist development	-	-	-	-
Court related	-	-	-	-
Debt service	-	-	-	-
Assigned for:				
Public safety	60	-	-	4,667
Transportation	-	37,878	-	-
Physical environment	-	-	3,860	-
Court related	-	-	-	-
TOTAL FUND BALANCES	2,149	37,878	117,852	140,137
TOTAL LIABILITIES, DEFERRED INFLOWS AND FUND BALANCES	$ 2,149	$ 352,739	$ 124,605	$ 140,137

Sumter County, Florida
Combining Balance Sheet – Non-major Governmental Funds
September 30, 2019

(Continued)

	Special Revenue Funds			
	Sheriff's Victim's Advocacy Grant Fund	Alcohol and Drug Abuse Fund	Court Improvement Fund	Secondary Trust Fund
ASSETS				
Cash and equivalents	$ -	$ 67,704	$ 44,542	$ 51,510
Investments	-	34,852	668,833	1,658,390
Due from other funds	-	28	990	-
Due from other governments	15,504	-	-	892,777
Receivables	-	-	-	-
TOTAL ASSETS	$ 15,504	$ 102,584	$ 714,365	$ 2,602,677
LIABILITIES				
Accounts payable and accrued liabilities	$ -	$ -	$ 21,012	$ 567,746
Due to other funds	15,504	-	-	-
TOTAL LIABILITIES	15,504	-	21,012	567,746
DEFERRED INFLOWS				
Unavailable revenue	-	-	-	133,752
FUND BALANCES				
Restricted for:				
Records modernization	-	-	-	-
Public safety	-	-	-	-
Transportation	-	-	-	1,770,027
Anti-drug abuse	-	-	-	-
Boating improvements	-	-	-	-
Physical environment	-	-	-	-
Tourist development	-	-	-	-
Court related	-	99,788	670,921	-
Debt service	-	-	-	-
Assigned for:				
Public safety	-	-	-	-
Transportation	-	-	-	131,152
Physical environment	-	-	-	-
Court related	-	2,796	22,432	-
TOTAL FUND BALANCES	-	102,584	693,353	1,901,179
TOTAL LIABILITIES, DEFERRED INFLOWS AND FUND BALANCES	$ 15,504	$ 102,584	$ 714,365	$ 2,602,677

Sumter County, Florida
Combining Balance Sheet – Non-major Governmental Funds
September 30, 2019

(Continued)

	Special Revenue Funds			
	Crime Prevention Fund	County Transportation Trust Fund	Court Local Requirements Fund	Court Technology Fund
ASSETS				
Cash and equivalents	$ 40,481	$ 180,109	$ 27,255	$ 110,111
Investments	248,134	5,304,452	104,288	1,237
Due from other funds	40	-	130	18,842
Due from other governments	-	1,570,121	-	-
Receivables	-	15,794	-	-
TOTAL ASSETS	$ 288,655	$ 7,070,476	$ 131,673	$ 130,190
LIABILITIES				
Accounts payable and accrued liabilities	$ -	$ 160,978	$ 8,711	$ 32,128
Due to other funds	36,265	-	-	-
Due to other governments	-	-	-	-
TOTAL LIABILITIES	36,265	160,978	8,711	32,128
DEFERRED INFLOWS				
Unavailable revenue	-	668,400	-	-
FUND BALANCES				
Restricted for:				
Records modernization	-	-	-	-
Public safety	244,779	-	-	-
Transportation	-	6,099,721	-	-
Anti-drug abuse	-	-	-	-
Boating improvements	-	-	-	-
Physical environment	-	-	-	-
Tourist development	-	-	-	-
Court related	-	-	119,591	-
Debt service	-	-	-	-
Assigned for:				
Public safety	7,611	141,377	-	-
Transportation	-	-	-	-
Physical environment	-	-	-	-
Court related	-	-	3,371	98,062
TOTAL FUND BALANCES	252,390	6,241,098	122,962	98,062
TOTAL LIABILITIES, DEFERRED INFLOWS AND FUND BALANCES	$ 288,655	$ 7,070,476	$ 131,673	$ 130,190

Sumter County, Florida
Combining Balance Sheet – Non-major Governmental Funds
September 30, 2019

(Continued)

	Special Revenue Funds				
	Tourist Development Fund	Sheriff Inmate Welfare Fund	Sheriff Federal Shared Fund	Clerk Records Modernization Fund	Clerk Fine and Forfeiture Fund
ASSETS					
Cash and equivalents	$ 90,949	$ 488,121	$ 28,160	$ 526,516	$ 356,251
Investments	1,902,216	-	-	-	-
Due from other funds	-	-	-	-	-
Due from other governments	35,097	-	-	6,312	84,730
Receivables	-	69,887	-	-	-
TOTAL ASSETS	$ 2,028,262	$ 558,008	$ 28,160	$ 532,828	$ 440,981
LIABILITIES					
Accounts payable and accrued liabilities	$ -	$ 835	$ -	$ -	$ 38,446
Due to other funds	-	36,975	-	-	210,295
TOTAL LIABILITIES	-	37,810	-	-	248,741
DEFERRED INFLOWS					
Unavailable revenue	-	-	-	-	-
FUND BALANCES					
Restricted for:					
Records modernization	-	-	-	532,828	-
Public safety	-	-	28,160	-	-
Transportation	-	-	-	-	-
Anti-drug abuse	-	-	-	-	-
Boating improvements	-	-	-	-	-
Physical environment	-	-	-	-	-
Tourist development	1,979,612	-	-	-	-
Court related	-	-	-	-	192,240
Debt service	-	-	-	-	-
Assigned for:					
Public safety	-	520,198	-	-	-
Transportation	-	-	-	-	-
Physical environment	48,650	-	-	-	-
Court related	-	-	-	-	-
TOTAL FUND BALANCES	2,028,262	520,198	28,160	532,828	192,240
TOTAL LIABILITIES, DEFERRED INFLOWS AND FUND BALANCES	$ 2,028,262	$ 558,008	$ 28,160	$ 532,828	$ 440,981

Sumter County, Florida
Combining Balance Sheet – Non-major Governmental Funds
September 30, 2019

(Concluded)

	Special Revenue Fund	Debt Service Fund	
	Clerk Court Technology Fund	Sinking Fund	Totals
ASSETS			
Cash and equivalents	$ 1,042,887	$ 84,195	$ 3,631,698
Investments	-	1,110,267	14,830,334
Due from other funds	-	-	21,436
Due from other governments	17,900	567,340	3,542,526
Receivables	-	-	138,848
TOTAL ASSETS	$ 1,060,787	$ 1,761,802	$ 22,164,842
LIABILITIES			
Accounts payable and accrued liabilities	$ 24,791	$ -	$ 1,899,009
Due to other funds	-	-	301,288
TOTAL LIABILITIES	24,791	-	2,200,297
DEFERRED INFLOWS			
Unavailable revenue	-	-	1,045,705
FUND BALANCES			
Restricted for:			
Records modernization	-	-	532,828
Public safety	-	-	843,466
Transportation	-	-	10,113,490
Anti-drug abuse	-	-	2,089
Boating improvements	-	-	113,992
Physical environment	-	-	28,892
Tourist development	-	-	1,979,612
Court related	1,035,996	-	2,118,536
Debt service	-	1,761,802	1,761,802
Assigned for:			
Public safety	-	-	678,922
Transportation	-	-	565,623
Physical environment	-	-	52,927
Court related	-	-	126,661
TOTAL FUND BALANCES	1,035,996	1,761,802	18,918,840
TOTAL LIABILITIES, DEFERRED INFLOWS AND FUND BALANCES	$ 1,060,787	$ 1,761,802	$ 22,118,797

Sumter County, Florida
Combining Statement of Revenues, Expenditures, and Changes in Fund Balances
Non-major Governmental Funds
For the Year Ended September 30, 2019

(Continued)

	Special Revenue Funds			
	Small Grants Fund	Law Enforcement Trust Fund	Road Impact Fee Fund	911 Emergency Telephone System Fund
REVENUES				
Taxes	$ -	$ -	$ -	$ -
Permits, fees and special assessments	-	-	5,117,376	-
Intergovernmental	37,497	-	-	882,450
Charges for services	-	-	-	-
Fines and forfeitures	-	-	-	-
Miscellaneous	417	133	266,385	5,009
TOTAL REVENUES	37,914	133	5,383,761	887,459
EXPENDITURES				
Current:				
General government	-	-	-	-
Public safety	-	-	-	492,100
Transportation	-	-	4,057,847	-
Human services	13,835	-	-	-
Culture and recreation	2,117	-	-	-
Court related	-	-	-	-
Debt Service:				
Principal retirement	-	-	-	-
Interest and fiscal charges	-	-	-	-
TOTAL EXPENDITURES	15,952	-	4,057,847	492,100
EXCESS OF REVENUES OVER (UNDER) EXPENDITURES	21,962	133	1,325,914	395,359
OTHER FINANCING SOURCES (USES)				
Transfers in	-	-	130,208	-
Transfers out	-	(291)	-	-
TOTAL OTHER FINANCING SOURCES (USES)	-	(291)	130,208	-
NET CHANGE IN FUND BALANCES	21,962	(158)	1,456,122	395,359
FUND BALANCES – BEGINNING OF YEAR	7,347	158	1,184,213	44,707
FUND BALANCES – END OF YEAR	$ 29,309	$ -	$ 2,640,335	$ 440,066

Sumter County, Florida
Combining Statement of Revenues, Expenditures, and Changes in Fund Balances
Non-major Governmental Funds
For the Year Ended September 30, 2019

(Continued)

	Special Revenue Funds			
	Anti-Drug Abuse Fund	County Transit Fund	Boating Improvement Fund	Police Education Fund
REVENUES				
Taxes	$ -	$ -	$ -	$ -
Permits, fees and special assessments	-	-	23,898	-
Intergovernmental	-	492,636	-	-
Charges for services	-	98,913	-	18,160
Fines and forfeitures	-	-	-	-
Miscellaneous	60	3,106	3,860	4,667
TOTAL REVENUES	60	594,655	27,758	22,827
EXPENDITURES				
Current:				
General government	-	-	-	-
Public safety	-	-	-	-
Transportation	-	1,146,779	-	-
Human services	-	-	-	-
Culture and recreation	-	-	60,687	-
Court related	-	-	-	-
Debt Service:				
Principal retirement	-	-	-	-
Interest and fiscal charges	-	-	-	-
TOTAL EXPENDITURES	-	1,146,779	60,687	-
EXCESS OF REVENUES OVER (UNDER) EXPENDITURES	60	(552,124)	(32,929)	22,827
OTHER FINANCING SOURCES (USES)				
Transfers in	-	418,019	-	-
Transfers out	-	-	-	(39,800)
TOTAL OTHER FINANCING SOURCES (USES)	-	418,019	-	(39,800)
NET CHANGE IN FUND BALANCES	60	(134,105)	(32,929)	(16,973)
FUND BALANCES – BEGINNING OF YEAR	2,089	171,983	150,781	157,110
FUND BALANCES – END OF YEAR	$ 2,149	$ 37,878	$ 117,852	$ 140,137

Sumter County, Florida
Combining Statement of Revenues, Expenditures, and Changes in Fund Balances
Non-major Governmental Funds
For the Year Ended September 30, 2019

(Continued)

	Special Revenue Funds			
	Sheriff's Victim's Advocacy Grant Fund	Alcohol and Drug Abuse Fund	Court Improvement Fund	Secondary Trust Fund
REVENUES				
Taxes	$ -	$ -	$ -	$ -
Permits, fees and special assessments	-	-	-	-
Intergovernmental	71,550	-	-	7,749,091
Charges for services	-	5,689	312,517	-
Fines and forfeitures	-	-	-	-
Miscellaneous	-	2,796	22,432	131,152
TOTAL REVENUES	71,550	8,485	334,949	7,880,243
EXPENDITURES				
Current:				
General government	-	-	-	-
Public safety	71,550	-	-	-
Transportation	-	-	-	10,869,440
Human services	-	-	-	-
Culture and recreation	-	-	-	-
Court related	-	-	425,179	-
Debt Service:				
Principal retirement	-	-	-	-
Interest and fiscal charges	-	-	-	-
TOTAL EXPENDITURES	71,550	-	425,179	10,869,440
EXCESS OF REVENUES OVER (UNDER) EXPENDITURES	-	8,485	(90,230)	(2,989,197)
OTHER FINANCING SOURCES (USES)				
Transfers in	-	-	-	-
Transfers out	-	-	-	-
TOTAL OTHER FINANCING SOURCES (USES)	-	-	-	-
NET CHANGE IN FUND BALANCES	-	8,485	(90,230)	(2,989,197)
FUND BALANCES – BEGINNING OF YEAR	-	94,099	783,583	4,890,376
FUND BALANCES – END OF YEAR	$ -	$ 102,584	$ 693,353	$ 1,901,179

Sumter County, Florida
Combining Statement of Revenues, Expenditures, and Changes in Fund Balances
Non-major Governmental Funds
For the Year Ended September 30, 2019

(Continued)

	Special Revenue Funds			
	Crime Prevention Fund	County Transportation Trust Fund	Court Locai Requirements Fund	Court Technoiogy Fund
REVENUES				
Taxes	$ -	$ 6,181,120	$ -	$ -
Permits, fees and special assessments	-	-	-	-
Intergovernmental	-	1,417,491	-	-
Charges for services	-	90,923	88,019	221,614
Fines and forfeitures	31,725	-	-	-
Miscellaneous	7,611	141,377	3,371	444
TOTAL REVENUES	39,336	7,830,911	91,390	222,058
EXPENDITURES				
Current:				
General government	-	-	-	-
Public safety	-	-	-	-
Transportation	-	4,153,459	-	-
Human services	-	-	-	-
Culture and recreation	-	-	-	-
Court related	-	-	75,044	688,334
Debt Service:				
Principal retirement	-	-	-	-
Interest and fiscal charges	-	-	-	-
TOTAL EXPENDITURES	-	4,153,459	75,044	688,334
EXCESS OF REVENUES OVER (UNDER) EXPENDITURES	39,336	3,677,452	16,346	(466,276)
OTHER FINANCING SOURCES (USES)				
Transfers in	-	-	-	535,000
Transfers out	(36,265)	-	-	-
TOTAL OTHER FINANCING SOURCES (USES)	(36,265)	-	-	535,000
NET CHANGE IN FUND BALANCES	3,071	3,677,452	16,346	68,724
FUND BALANCES – BEGINNING OF YEAR	249,319	2,563,646	106,616	29,338
FUND BALANCES – END OF YEAR	$ 252,390	$ 6,241,098	$ 122,962	$ 98,062

Sumter County, Florida
Combining Statement of Revenues, Expenditures, and Changes in Fund Balances
Non-major Governmental Funds
For the Year Ended September 30, 2019

(Continued)

	Special Revenue Funds				
	Tourist Development Fund	Sheriff Inmate Welfare Fund	Sheriff Federal Shared Fund	Clerk Records Modernization Fund	Clerk Fine and Forfeiture Fund
REVENUES					
Taxes	$ 815,486	$ -	$ -	$ -	$ -
Permits, fees and special assessments	-	-	-	-	-
Intergovernmental	-	-	-	-	191,939
Charges for services	-	155,928	-	75,622	761,199
Fines and forfeitures	-	-	-	-	812,215
Miscellaneous	48,650	319,492	82	45	34,844
TOTAL REVENUES	864,136	475,420	82	75,667	1,800,197
EXPENDITURES					
Current:					
General government	-	-	-	15,424	-
Public safety	-	296,227	-	-	-
Transportation	-	-	-	-	-
Human services	-	-	-	-	-
Culture and recreation	303,679	-	-	-	-
Court related	-	-	-	-	1,908,561
Debt Service:					
Principal retirement	-	-	-	-	-
Interest and fiscal charges	-	-	-	-	-
TOTAL EXPENDITURES	303,679	296,227	-	15,424	1,908,561
EXCESS OF REVENUES OVER (UNDER) EXPENDITURES	560,457	179,193	82	60,243	(108,364)
OTHER FINANCING SOURCES (USES)					
Transfers in	-	-	-	-	36,744
Transfers out	-	-	-	-	(166)
TOTAL OTHER FINANCING SOURCES (USES)	-	-	-	-	36,578
NET CHANGE IN FUND BALANCES	560,457	179,193	82	60,243	(71,786)
FUND BALANCES – BEGINNING OF YEAR	1,467,805	341,005	28,078	472,585	264,026
FUND BALANCES – END OF YEAR	$ 2,028,262	$ 520,198	$ 28,160	$ 532,828	$ 192,240

Sumter County, Florida
Combining Statement of Revenues, Expenditures, and Changes in Fund Balances
Non-major Governmental Funds
For the Year Ended September 30, 2019

(Concluded)

	Special Revenue Fund	Debt Service Fund	
	Clerk Court Technology Fund	Sinking Fund	Totals
REVENUES			
Taxes	$ -	$ -	$ 6,996,606
Permits, fees and special assessments	-	-	5,141,274
Intergovernmental	-	11,221,956	22,064,610
Charges for services	210,533	-	2,039,117
Fines and forfeitures	-	-	843,940
Miscellaneous	92	39,804	1,035,829
TOTAL REVENUES	210,625	11,261,760	38,121,376
EXPENDITURES			
Current:			
General government	-	-	15,424
Public safety	-	-	859,877
Transportation	-	-	20,227,525
Human services	-	-	13,835
Culture and recreation	-	-	366,483
Court related	137,783	-	3,234,901
Debt Service:			
Principal retirement	-	3,563,590	3,563,590
Interest and fiscal charges	-	2,365,331	2,365,331
TOTAL EXPENDITURES	137,783	5,928,921	30,646,966
EXCESS OF REVENUES OVER (UNDER) EXPENDITURES	72,842	5,332,839	7,474,410
OTHER FINANCING SOURCES (USES)			
Transfers in	-	-	1,119,971
Transfers out	-	(5,123,461)	(5,199,983)
TOTAL OTHER FINANCING SOURCES (USES)	-	(5,123,461)	(4,080,012)
NET CHANGE IN FUND BALANCES	72,842	209,378	3,394,398
FUND BALANCES – BEGINNING OF YEAR	963,154	1,552,424	15,524,442
FUND BALANCES – END OF YEAR	$ 1,035,996	$ 1,761,802	$ 18,918,840

Sumter County, Florida
Schedule of Revenues, Expenditures, and Changes in Fund Balances - Budget and Actual
Small Grants Fund
For the Year Ended September 30, 2019

	Budgeted Amounts			Variance with Final Budget Positive (Negative)
	Original	Final	Actual	
REVENUES				
Intergovernmental	$ 35,303	$ 37,480	$ 37,497	$ 17
Miscellaneous	-	-	417	417
TOTAL REVENUES	35,303	37,480	37,914	434
EXPENDITURES				
Current:				
Human services:				
State mosquito control	33,404	41,640	13,835	27,805
Culture and recreation:				
Florida arts license plate	1,899	3,187	2,117	1,070
TOTAL EXPENDITURES	35,303	44,827	15,952	28,875
EXCESS OF REVENUES OVER EXPENDITURES	-	(7,347)	21,962	29,309
FUND BALANCES – BEGINNING OF YEAR	-	7,347	7,347	-
FUND BALANCES – END OF YEAR	$ -	$ -	$ 29,309	$ 29,309

Sumter County, Florida
Schedule of Revenues, Expenditures, and Changes in Fund Balances - Budget and Actual
Law Enforcement Trust Fund
For the Year Ended September 30, 2019

	Budgeted Amounts			Variance with Final Budget Positive (Negative)
	Original	Final	Actual	
REVENUES				
Fines & forfeitures	$ -	$ -	$ -	$ -
Miscellaneous	-	136	133	(3)
TOTAL REVENUES	-	136	133	(3)
EXPENDITURES	-	-	-	-
EXCESS OF REVENUES OVER EXPENDITURES	-	136	133	(3)
OTHER FINANCING USES				
Transfer out	(130,000)	(294)	(291)	3
NET CHANGE IN FUND BALANCES	(130,000)	(158)	(158)	-
FUND BALANCES – BEGINNING OF YEAR	130,000	158	158	-
FUND BALANCES – END OF YEAR	$ -	$ -	$ -	$ -

Sumter County, Florida
Schedule of Revenues, Expenditures, and Changes in Fund Balances - Budget and Actual
Road Impact Fee Fund
For the Year Ended September 30, 2019

	Budgeted Amounts			Variance with Final Budget Positive (Negative)
	Original	Final	Actual	
REVENUES				
Permits, fees & special assessments	$ 3,400,000	$ 3,269,792	$ 5,117,376	$ 1,847,584
Miscellaneous	202,588	344,350	266,385	(77,965)
TOTAL REVENUES	3,602,588	3,614,142	5,383,761	1,769,619
EXPENDITURES				
Current:				
Transportation	5,845,854	4,703,015	4,057,847	645,168
EXCESS OF REVENUES OVER EXPENDITURES	(2,243,266)	(1,088,873)	1,325,914	2,414,787
OTHER FINANCING SOURCES				
Transfer in	15,410	145,618	130,208	(15,410)
NET CHANGE IN FUND BALANCES	(2,227,856)	(943,255)	1,456,122	2,399,377
FUND BALANCES – BEGINNING OF YEAR	2,227,856	1,184,213	1,184,213	-
FUND BALANCES – END OF YEAR	$ -	$ 240,958	$ 2,640,335	$ 2,399,377

Sumter County, Florida
Schedule of Revenues, Expenditures, and Changes in Fund Balances - Budget and Actual
911 Emergency Telephone System Fund
For the Year Ended September 30, 2019

	Budgeted Amounts			Variance with Final Budget Positive (Negative)
	Original	Final	Actual	
REVENUES				
Intergovernmental	$ 592,743	$ 592,743	$ 882,450	$ 289,707
Miscellaneous	1,100	1,100	5,009	3,909
TOTAL REVENUES	593,843	593,843	887,459	293,616
EXPENDITURES				
Current:				
Public safety:				
E-911 system	505,161	549,867	492,100	57,767
EXCESS OF REVENUES OVER EXPENDITURES	88,682	43,976	395,359	351,383
FUND BALANCES – BEGINNING OF YEAR	-	44,706	44,707	1
FUND BALANCES – END OF YEAR	$ 88,682	$ 88,682	$ 440,066	$ 351,384

Sumter County, Florida
Schedule of Revenues, Expenditures, and Changes in Fund Balances - Budget and Actual
Anti-Drug Abuse Fund
For the Year Ended September 30, 2019

	Budgeted Amounts			Variance with Final Budget Positive (Negative)
	Original	Final	Actual	
REVENUES				
Miscellaneous	$ -	$ -	$ 60	$ 60
EXPENDITURES	-	-	-	-
EXCESS OF REVENUES OVER EXPENDITURES	-	-	60	60
OTHER FINANCING USES				
Transfer out	-	(2,089)	-	2,089
NET CHANGE IN FUND BALANCES	-	(2,089)	60	2,149
FUND BALANCES – BEGINNING OF YEAR	2,079	2,089	2,089	-
FUND BALANCES – END OF YEAR	$ 2,079	$ -	$ 2,149	$ 2,149

Sumter County, Florida
Schedule of Revenues, Expenditures, and Changes in Fund Balances - Budget and Actual
County Transit Fund
For the Year Ended September 30, 2019

	Budgeted Amounts			Variance with Final Budget Positive (Negative)
	Original	Final	Actual	
REVENUES				
Intergovernmental	$ 680,569	$ 702,432	$ 492,636	$ (209,796)
Charges for services	52,466	52,466	98,913	46,447
Miscellaneous	23	23	3,106	3,083
TOTAL REVENUES	733,058	754,921	594,655	(160,266)
EXPENDITURES				
Current:				
Transportation:				
Transit	1,120,061	1,344,922	1,146,779	198,143
DEFICIENCY OF REVENUES UNDER EXPENDITURES	(387,003)	(590,001)	(552,124)	37,877
OTHER FINANCING SOURCES				
Transfer in	387,003	418,019	418,019	-
NET CHANGE IN FUND BALANCES	-	(171,982)	(134,105)	37,877
FUND BALANCES – BEGINNING OF YEAR	-	171,982	171,983	1
FUND BALANCES – END OF YEAR	$ -	$ -	$ 37,878	$ 37,878

Sumter County, Florida
Schedule of Revenues, Expenditures, and Changes in Fund Balances - Budget and Actual
Boating Improvement Fund
For the Year Ended September 30, 2019

	Budgeted Amounts			Variance with Final Budget Positive (Negative)
	Original	Final	Actual	
REVENUES				
Permits, fees & special assessments	$ 19,390	$ 19,390	$ 23,898	4,508
Miscellaneous	-	-	3,860	3,860
TOTAL REVENUES	19,390	19,390	27,758	8,368
EXPENDITURES				
Capital Outlay:				
Boating Improvement	-	119,486	60,687	
DEFICIENCY OF REVENUES UNDER EXPENDITURES	19,390	(100,096)	(32,929)	8,368
FUND BALANCES – BEGINNING OF YEAR	114,668	150,781	150,781	-
FUND BALANCES – END OF YEAR	$ 134,058	$ 50,685	$ 117,852	$ 8,368

Sumter County, Florida
Schedule of Revenues, Expenditures, and Changes in Fund Balances - Budget and Actual
Police Education Fund
For the Year Ended September 30, 2019

	Budgeted Amounts			Variance with Final Budget Positive (Negative)
	Original	Final	Actual	
REVENUES				
Charges for services	$ 17,194	$ 17,194	$ 18,160	$ 966
Miscellaneous	-	-	4,667	4,667
TOTAL REVENUES	17,194	17,194	22,827	5,633
EXPENDITURES	-	-	-	-
EXCESS OF REVENUES OVER EXPENDITURES	17,194	17,194	22,827	5,633
OTHER FINANCING SOURCES				
Transfer out	(79,022)	(174,303)	-	174,303
FUND BALANCES – BEGINNING OF YEAR	61,828	157,109	157,110	1
FUND BALANCES – END OF YEAR	$ -	$ -	$ 179,937	$ 179,937

Sumter County, Florida
Schedule of Revenues, Expenditures, and Changes in Fund Balances - Budget and Actual
Alcohol and Drug Abuse Fund
For the Year Ended September 30, 2019

	Budgeted Amounts			Variance with Final Budget Positive (Negative)
	Original	Final	Actual	
REVENUES				
Charges for services	$ 3,347	$ 3,347	$ 5,689	$ 2,342
Miscellaneous	-	-	2,796	2,796
TOTAL REVENUES	3,347	3,347	8,485	5,138
EXPENDITURES	-	-	-	-
EXCESS OF REVENUES OVER EXPENDITURES	3,347	3,347	8,485	5,138
FUND BALANCES – BEGINNING OF YEAR	92,617	94,098	94,099	1
FUND BALANCES – END OF YEAR	$ 95,964	$ 97,445	$ 102,584	$ 5,139

Sumter County, Florida
Schedule of Revenues, Expenditures, and Changes in Fund Balances - Budget and Actual
Court Improvement Fund
For the Year Ended September 30, 2019

	Budgeted Amounts			Variance with Final Budget Positive (Negative)
	Original	Final	Actual	
REVENUES				
Charges for services	$ 288,686	$ 288,686	$ 312,517	$ 23,831
Miscellaneous	-	-	22,432	22,432
TOTAL REVENUES	288,686	288,686	334,949	46,263
EXPENDITURES				
Current:				
Court related:				
Judicial	857,881	1,072,267	425,179	647,088
DEFICIENCY OF REVENUES UNDER EXPENDITURES	(569,195)	(783,581)	(90,230)	693,351
FUND BALANCES – BEGINNING OF YEAR	569,195	783,581	783,583	2
FUND BALANCES – END OF YEAR	$ -	$ -	$ 693,353	$ 693,353

Sumter County, Florida
Schedule of Revenues, Expenditures, and Changes in Fund Balances - Budget and Actual
Secondary Trust Fund
For the Year Ended September 30, 2019

	Budgeted Amounts			Variance with Final Budget Positive (Negative)
	Original	Final	Actual	
REVENUES				
Intergovernmental	$ 8,381,773	$ 8,401,471	$ 7,749,091	$ (652,380)
Miscellaneous	65,903	65,903	131,152	65,249
TOTAL REVENUES	8,447,676	8,467,374	7,880,243	(587,131)
EXPENDITURES				
Current:				
Transportation	14,858,877	20,672,757	10,869,440	(9,803,317)
DEFICIENCY OF REVENUES UNDER EXPENDITURES	(6,411,201)	(12,205,383)	(2,989,197)	(10,390,448)
OTHER FINANCING SOURCES				
Transfers in	3,416,169	12,233,683	-	(12,233,683)
NET CHANGE IN FUND BALANCES	(17,853,909)	(20,644,457)	(13,858,637)	6,785,820
FUND BALANCES – BEGINNING OF YEAR	2,995,032	4,890,375	4,890,376	1
FUND BALANCES – END OF YEAR	$ -	$ 4,918,675	$ 1,901,179	$ (10,390,447)

Sumter County, Florida
Schedule of Revenues, Expenditures, and Changes in Fund Balances - Budget and Actual
Crime Prevention Fund
For the Year Ended September 30, 2019

	Budgeted Amounts			Variance with Final Budget Positive (Negative)
	Original	Final	Actual	
REVENUES				
Fines and forfeitures	$ 23,658	$ 23,658	$ 31,725	$ 8,067
Miscellaneous	-	-	7,611	7,611
TOTAL REVENUES	23,658	23,658	39,336	15,678
EXPENDITURES	-	-	-	-
EXCESS OF REVENUES OVER EXPEDITURES	23,658	23,658	39,336	15,678
OTHER FINANCING USES				
Transfer out	(186,853)	(272,976)	(36,265)	236,711
NET CHANGE IN FUND BALANCES	(163,195)	(249,318)	3,071	252,389
FUND BALANCES – BEGINNING OF YEAR	163,195	249,318	249,319	1
FUND BALANCES – END OF YEAR	$ -	$ -	$ 252,390	$ 252,390

Sumter County, Florida
Schedule of Revenues, Expenditures, and Changes in Fund Balances - Budget and Actual
County Transportation Trust Fund
For the Year Ended September 30, 2019

	Budgeted Amounts			Variance with Final Budget Positive (Negative)
	Original	Final	Actual	
REVENUES				
Taxes	$ 5,662,764	$ 5,662,764	$ 6,181,120	$ 518,356
Permits, fees & special assessments	900	900	-	(900)
Intergovernmental	1,120,296	1,120,296	1,417,491	297,195
Charges for services	92,292	92,292	90,923	(1,369)
Miscellaneous	3,500	3,500	141,377	137,877
TOTAL REVENUES	6,879,752	6,879,752	7,830,911	951,159
EXPENDITURES				
Current:				
Transportation:				
Road & bridge	4,469,325	5,583,609	4,153,459	1,430,150
EXCESS OF REVENUES OVER EXPENDITURES	2,410,427	1,296,143	3,677,452	2,381,309
OTHER FINANCING SOURCES (USES)				
Transfer in	6,800	6,800	-	(6,800)
Transfer out	(3,021,379)	(3,621,690)	-	-
TOTAL OTHER FINANCING SOURCES (USES)	(3,014,579)	(3,614,890)	-	3,614,890
NET CHANGE IN FUND BALANCES	(604,152)	(2,318,747)	3,677,452	5,996,199
FUND BALANCES – BEGINNING OF YEAR	849,051	2,563,646	2,563,646	-
FUND BALANCES – END OF YEAR	$ 244,899	$ 244,899	$ 6,241,098	$ 5,996,199

Sumter County, Florida
Schedule of Revenues, Expenditures, and Changes in Fund Balances - Budget and Actual
Court Local Requirements Fund
For the Year Ended September 30, 2019

	Budgeted Amounts			Variance with Final Budget Positive (Negative)
	Original	Final	Actual	
REVENUES				
Charges for services	$ 65,820	$ 88,020	$ 88,019	$ (1)
Miscellaneous	-	-	3,371	3,371
TOTAL REVENUES	65,820	88,020	91,390	3,370
EXPENDITURES				
Current:				
Court related:				
Law library	22,996	23,414	23,414	-
Legal aid	16,455	22,005	22,005	-
Innovative court programs	67,553	149,216	29,625	119,591
TOTAL EXPENDITURES	107,004	194,635	75,044	119,591
EXCESS OF REVENUES OVER EXPENDITURES	(41,184)	(106,615)	16,346	122,961
FUND BALANCES – BEGINNING OF YEAR	41,184	106,615	106,616	1
FUND BALANCES – END OF YEAR	$ -	$ -	$ 122,962	$ 122,962

Sumter County, Florida
Schedule of Revenues, Expenditures, and Changes in Fund Balances - Budget and Actual
Court Technology Fund
For the Year Ended September 30, 2019

	Budgeted Amounts			Variance with Final Budget Positive (Negative)
	Original	Final	Actual	
REVENUES				
Charges for services	$ 202,521	$ 202,521	$ 221,614	$ 19,093
Miscellaneous	-	-	444	444
TOTAL REVENUES	202,521	202,521	222,058	19,537
EXPENDITURES				
Current:				
Court related:				
Guardian ad litem	3,329	10,663	1,969	8,694
Court functions	217,152	518,106	430,550	87,556
State attorney	203,811	211,145	190,528	20,617
Public defender	70,269	77,603	65,287	12,316
TOTAL EXPENDITURES	494,561	817,517	688,334	129,183
DEFICIENCY OF REVENUES UNDER EXPENDITURES	(292,040)	(614,996)	(466,276)	148,720
OTHER FINANCING SOURCES				
Transfer in	292,040	585,659	535,000	(50,659)
NET CHANGE IN FUND BALANCES	-	(29,337)	68,724	98,061
FUND BALANCES – BEGINNING OF YEAR	-	29,337	29,338	1
FUND BALANCES – END OF YEAR	$ -	$ -	$ 98,062	$ 98,062

Sumter County, Florida
Schedule of Revenues, Expenditures, and Changes in Fund Balances - Budget and Actual
Tourist Development Fund
For the Year Ended September 30, 2019

	Budgeted Amounts			Variance with Final Budget Positive (Negative)
	Original	Final	Actual	
REVENUES				
Taxes	$ 714,592	$ 714,592	$ 815,486	$ 100,894
Miscellaneous	100	100	48,650	48,550
TOTAL REVENUES	714,692	714,692	864,136	149,444
EXPENDITURES				
Current:				
Culture and recreation:				
County promotion	357,417	357,417	303,679	53,738
EXCESS OF REVENUES OVER EXPENDITURES	357,275	357,275	560,457	203,182
OTHER FINANCING USES				
Transfers out	(52,250)	(52,250)	-	52,250
NET CHANGE IN FUND BALANCES	305,025	305,025	560,457	255,432
FUND BALANCES – BEGINNING OF YEAR	1,219,135	1,467,805	1,467,805	-
FUND BALANCES – END OF YEAR	$ 1,524,160	$ 1,772,830	$ 2,028,262	$ 255,432

Sumter County, Florida
Schedule of Revenues, Expenditures, and Changes in Fund Balances - Budget and Actual
Sheriff Inmate Welfare Fund
For the Year Ended September 30, 2019

	Budgeted Amounts			Variance with Final Budget Positive (Negative)
	Original	Final	Actual	
REVENUES				
Charges for services	$ 70,000	$ 70,000	$ 155,928	$ 85,928
Miscellaneous	306,000	306,000	319,492	13,492
TOTAL REVENUES	376,000	376,000	475,420	99,420
EXPENDITURES				
Current:				
Public Safety				
Inmate welfare	528,382	528,382	296,227	232,155
EXCESS OF REVENUES OVER EXPENDITURES	(152,382)	(152,382)	179,193	331,575
FUND BALANCES – BEGINNING OF YEAR	341,005	341,005	341,005	-
FUND BALANCES – END OF YEAR	$ 188,623	$ 188,623	$ 520,198	$ 331,575

Sumter County, Florida
Schedule of Revenues, Expenditures, and Changes in Fund Balances - Budget and Actual
Clerk Records Modernization Fund
For the Year Ended September 30, 2019

	Budgeted Amounts			Variance with Final Budget Positive (Negative)
	Original	Final	Actual	
REVENUES				
Charges for services	$ 80,000	$ 80,000	$ 75,622	$ (4,378)
Miscellaneous	40	40	45	5
TOTAL REVENUES	80,040	80,040	75,667	(4,373)
EXPENDITURES				
Current:				
General government:	552,625	552,625	15,424	537,201
TOTAL EXPENDITURES	552,625	552,625	15,424	537,201
EXCESS (DEFICIENCY) OF REVENUES OVER EXPENDITURES	(472,585)	(472,585)	60,243	532,828
FUND BALANCES – BEGINNING OF YEAR	472,585	472,585	472,585	-
FUND BALANCES – END OF YEAR	$ -	$ -	$ 532,828	$ 532,828

Sumter County, Florida
Schedule of Revenues, Expenditures, and Changes in Fund Balances - Budget and Actual
Clerk Fine and Forfeiture Fund
For the Year Ended September 30, 2019

	Budgeted Amounts			Variance with Final Budget Positive (Negative)
	Original	Final	Actual	
REVENUES				
Intergovernmental	$ 139,867	$ 139,867	$ 191,939	$ 52,072
Charges for services	1,217,366	1,217,366	761,199	(456,167)
Fines and forfeitures	858,000	858,000	812,215	(45,785)
Miscellaneous	2,600	2,600	34,844	32,244
TOTAL REVENUES	2,217,833	2,217,833	1,800,197	(417,636)
EXPENDITURES				
Current:				
Court related	2,254,578	2,254,578	1,908,561	346,017
DEFICIENCY OF REVENUES OVER EXPENDITURES	(36,745)	(36,745)	(108,364)	(71,619)
OTHER FINANCING SOURCES (USES)				
Transfer in	36,745	36,745	36,744	(1)
Transfer out	-	-	(166)	(166)
TOTAL OTHER FINANCING SOURCES (USES)	36,745	36,745	36,578	(167)
NET CHANGE IN FUND BALANCES	-	-	(71,786)	(71,786)
FUND BALANCES – BEGINNING OF YEAR	-	-	264,026	264,026
FUND BALANCES – END OF YEAR	$ -	$ -	$ 192,240	$ 192,240

Sumter County, Florida
Schedule of Revenues, Expenditures, and Changes in Fund Balances - Budget and Actual
Clerk Court Technology Fund
For the Year Ended September 30, 2019

	Budgeted Amounts			Variance with Final Budget Positive (Negative)
	Original	Final	Actual	
REVENUES				
Charges for services	$ 215,000	$ 215,000	$ 210,533	$ (4,467)
Miscellaneous	85	85	92	7
TOTAL REVENUES	215,085	215,085	210,625	(4,460)
EXPENDITURES				
Current:				
Court related	1,178,239	1,178,239	137,783	1,040,456
EXCESS OF REVENUES OVER EXPENDITURES	(963,154)	(963,154)	72,842	1,035,996
FUND BALANCES – BEGINNING OF YEAR	963,154	963,154	963,154	-
FUND BALANCES – END OF YEAR	$ -	$ -	$ 1,035,996	$ 1,035,996

Sumter County, Florida
Schedule of Revenues, Expenditures, and Changes in Fund Balances - Budget and Actual
Debt Service Fund
For the Year Ended September 30, 2019

	Budgeted Amounts			Variance with Final Budget Positive (Negative)
	Original	Final	Actual	
REVENUES				
Intergovernmental	$ 10,286,496	$ 11,221,956	$ 11,221,956	$ -
Miscellaneous	100	11,046	39,804	28,758
TOTAL REVENUES	10,286,596	11,233,002	11,261,760	28,758
EXPENDITURES				
Debt Service				
Principal retirement	3,563,592	3,563,593	3,563,590	3
Interest and fiscal charges	2,366,024	2,366,024	2,365,331	693
TOTAL EXPENDITURES	5,929,616	5,929,617	5,928,921	696
EXCESS OF REVENUES OVER EXPENDITURES	4,356,980	5,303,385	5,332,839	29,454
OTHER FINANCING USES				
Transfer out	(4,356,980)	(5,123,462)	(5,123,461)	1
NET CHANGE IN FUND BALANCES	-	179,923	209,378	29,455
FUND BALANCES – BEGINNING OF YEAR	1,732,347	1,552,424	1,552,424	-
FUND BALANCES – END OF YEAR	$ 1,732,347	$ 1,732,347	$ 1,761,802	$ 29,455

Sumter County, Florida
Schedule of Revenues, Expenditures, and Changes in Fund Balances - Budget and Actual
2018 Bond Construction Fund
For the Year Ended September 30, 2019

	Budgeted Amounts			Variance with Final Budget Positive (Negative)
	Original	Final	Actual	
REVENUES				
Miscellaneous	$ -	$ -	$ 845,950	$ 845,950
EXPENDITURES				
Capital Outlay:				
Parking structure	6,650,000	6,650,000	3,067,326	3,582,674
Jail housing	7,650,000	7,650,000	1,522,478	
Fire station	2,830,000	2,830,000	101,984	2,728,016
TOTAL EXPENDITURES	17,130,000	17,130,000	4,691,788	6,310,690
NET CHANGE IN FUND BALANCES	(17,130,000)	(17,130,000)	(3,845,838)	13,284,162
FUND BALANCES – BEGINNING OF YEAR	29,430,000	29,430,000	29,843,589	413,589
FUND BALANCES – END OF YEAR	$ 12,300,000	$ 12,300,000	$ 25,997,751	$ 13,697,751

Sumter County, Florida
Combining Statement of Fiduciary Net Position
Agency Funds
September 30, 2019

	Clerk of Circuit Court	Sheriff	Tax Collector	Totals
ASSETS				
Cash and equivalents	$ 2,696,884	$ 254,135	$ 3,296,677	$ 6,247,696
Receivables	-	-	1,739	1,739
TOTAL ASSETS	$ 2,696,884	$ 254,135	$ 3,298,416	$ 6,249,435
LIABILITIES				
Assets held for others	$ 2,696,884	$ 254,135	$ 3,298,416	$ 6,249,435
NET POSITION	$ -	$ -	$ -	$ -

Sumter County, Florida
Combining Statement of Changes in Assets and Liabilities
Agency Funds
For the Year Ended September 30, 2019

	Balance September 30, 2018	Additions	Deductions	Balance September 30, 2019
CLERK OF CIRCUIT COURT				
Assets				
Cash and equivalents	$ 2,314,013	$ 30,644,113	$ 30,261,242	$ 2,696,884
Liabilities				
Assets held for others	$ 2,314,013	$ 30,644,113	$ 30,261,242	$ 2,696,884
SHERIFF				
Assets				
Cash and equivalents	$ 166,896	$ 1,389,361	$ 1,302,122	$ 254,135
Liabilities				
Assets held for others	$ 166,896	$ 1,389,361	$ 1,302,122	$ 254,135
TAX COLLECTOR				
Assets				
Cash and equivalents	$ 3,250,036	$ 267,307,469	$ 267,260,828	$ 3,296,677
Receivables	694	10,851	9,806	1,739
Total Assets	$ 3,250,730	$ 267,318,320	$ 267,270,634	$ 3,298,416
Liabilities				
Assets held for others	$ 3,250,730	$ 267,318,320	$ 267,270,634	$ 3,298,416
TOTAL ALL AGENCY FUNDS				
Assets				
Cash and equivalents	$ 5,730,945	$ 299,340,943	$ 298,824,192	$ 6,247,696
Receivables	694	10,851	9,806	1,739
Total Assets	$ 5,731,639	$ 299,351,794	$ 298,833,998	$ 6,249,435
Liabilities				
Assets held for others	$ 5,731,639	$ 299,351,794	$ 298,833,998	$ 6,249,435

Schedule of Expenditures of Federal Awards and State Financial Assistance
Year ended September, 30, 2019

Federal Awards	Federal CFDA Number	Contract Number	Expenditures	Program Total
Department of Justice				
Passed Through the Attorney General:				
Crime Victim Assistance	16.575	O-00256	$ 71,550	
Department of Transportation				
Passed Through State Department of Transportation:				
Highway Planning and Construction Cluster:				
Highway Planning and Construction (LAP Agreement)	20.205	436149-1-58/68-01/G0U79	354,826	
Highway Planning and Construction (LAP Agreement)	20.205	437604-1-38-01/G0K16	15,105	
Highway Planning and Construction (LAP Agreement)	20.205	439912-1-38-01/G0Y60	137,410	
Highway Planning and Construction (LAP Agreement)	20.205	436185-1-58-01/G0V92	307,641	
Highway Planning and Construction (LAP Agreement)	20.205	436151-1-58/G1307	339,763	
Highway Planning and Construction (LAP Agreement)	20.205	437604-1-58/68-01/G1790	42,761	
Total Highway Planning and Construction Cluster				$ 1,197,506
Transit Services Cluster:				
Enhance Mobility for Seniors and Individuals with Disabilities	20.513	FL-2018-120-00/TRIPS-17-CA-FTS-G	191,927	
Total Transit Services Cluster				191,927
Formula Grants for Rural Areas (Section 5311)	20.509	433310-1-84-36/G0S36	37,069	
Formula Grants for Rural Areas (Section 5311)	20.509	433310-1-84-37/G1739	197,508	234,577
U.S. Election Assistance Commission				
Passed Through Department of State, Division of Elections:				
Help America Vote Act Requirements Payments (HAVA)	90.401	MOA#2018-2019-002	10,388	
Help America Vote Act Requirements Payments (HAVA)	90.401	MOA#2018-2019-001	89,259	
Help America Vote Act Requirements Payments (HAVA)	90.401	MOA#2018-2019-003	16,741	116,388
Department of Health and Human Services				
Passed Through Department of Revenue:				
Child Support Enforcement (Title IV – D)	93.563	COC60	119,212	
Child Support Enforcement (Title IV – D)	93.563	CSS93	11,801	131,013
Department of Homeland Security				
Passed Through Division of Emergency Management:				
Disaster Grants -Public Assistance (Presidentially Declared Disasters)	97.036	FEMA-4337-DR-FL/Z0691	871,193	
Disaster Grants -Public Assistance (Presidentially Declared Disasters)	97.036	FEMA-4337-DR-FL/Z0490	319,639	1,190,832
Passed Through Department of Economic Opportunity:				
Emergency Management Performance Grants	97.042	18-FG-7A-05-07-01-074	357	
Emergency Management Performance Grants	97.042	19-FG-AF-05-70-01-060	45,053	45,410
Total expenditures of federal awards			$ 3,179,203	

Total provided to subrecipients - $0

Schedule of Expenditures of Federal Awards and State Financial Assistance
For the year ended September 30, 2019

State Financial Assistance	State CSFA Number	Contract/ Grant Number	Expenditures	Project Total
Executive Office of the Governor				
Emergency Management Programs	31.063	A0045	$ 26,088	
Emergency Management Programs	31.063	19-BG-21-05-70-01-022	85,801	$ 111,889
Department of Agriculture and Consumer Services				
Mosquito Control	42.003	25502	34,481	
Department of State, Secretary of State				
State Aid to Libraries	45.030	17-ST-78	181,075	
Florida Housing Finance Corporation				
State Housing Initiatives Partnership Program (SHIP)	40.901	--	687,737	
Department of Transportation				
Florida Commission for the Transportation Disadvantaged (CTD) Trip and Equipment Grant Program	55.001	432029-1-14-01-G0X64	286,102	
Florida Commission for the Transportation Disadvantaged (CTD) Trip and Equipment Grant Program	55.001	432027-1-84-01 G0Y43	21,863	
Florida Commission for the Transportation Disadvantaged (CTD) Trip and Equipment Grant Program	55.001	432027-1-84-01 GOM95 432028-1-84-01 G1A64	73,527	381,492
County Incentive Grant Program (CIGP)	55.008	436365-1-34-01/G0Y87	96,935	
Small County Outreach Program (SCOP)	55.009	419058-1-54-01/GOK13	115,129	
Small County Outreach Program (SCOP)	55.009	437466-1-54-01-GOK15	29,109	
Small County Outreach Program (SCOP)	55.009	437467-1-54-01/GOK17	178,769	
Small County Outreach Program (SCOP)	55.009	429944-1-58-01/G0092	1,801,722	
Small County Outreach Program (SCOP)	55.009	437465-1-54-01/G0K14	151,905	
Small County Outreach Program (SCOP)	55.009	439223-1-34-01/G0R22	76,683	
Small County Outreach Program (SCOP)	55.009	433670-1-54-02/G0U44	1,369,003	3,722,320
Department of Management Services				
E911 State Grant Program	72.003	S11-18-05-22	94,235	
E911 State Grant Program	72.003	S12-19-02-22	46,045	140,280
Department of Highway Safety and Motor Vehicles				
Florida Arts License Plate Project	76.041	-	2,117	
Total expenditure of state financial assistance			$ 5,358,326	

Notes to Schedule of Expenditures of Federal Awards and State Financial Assistance
For the year ended September 30, 2019

NOTE 1 – BASIS OF PRESENTATION

The accompanying Schedule of Expenditures of Federal Awards and State Financial Assistance includes the federal and state award activity of the County under programs of the federal and state government for the year ended September 30, 2019. The information in this Schedule is presented in accordance with the requirements of Title 2 U.S. *Code of Federal Regulations* Part 200, *Uniform Administrative Requirements, Cost Principles,* and *Audit Requirements for Federal Awards* (Uniform Guidance) and Chapter 10.550, Rules of the Auditor General. Because this schedule presents only a selected portion of the operations of the County, it is not intended to and does not present the financial position, changes in net position or cash flows of the County.

NOTE 2 – SUBRECIPIENTS

The County did not provide federal or state awards to subrecipients.

NOTE 3 – INDIRECT COST RATE

The County has not elected to use the 10-percent de minimis indirect cost rate allowed under the Uniform Guidance.

NOTE 4 – LOAN OR LOAN GUARANTEE PROGRAMS

The County does not participate in any loan or loan guarantee programs.

NOTE 5 – FEDERALLY FUNDED INSURANCE

The County does not receive any federally funded insurance.

NOTE 6 – NONCASH ASSISTANCE

The County did not receive any noncash assistance.

CRI CARR RIGGS & INGRAM
CPAs and Advisors

Carr, Riggs & Ingram, LLC
4010 N.W. 25th Place
Gainesville, Florida 32606
P.O. Box 13494
Gainesville, Florida 32604

(352) 372-6300
(352) 375-1583 (fax)
www.cricpa.com

MANAGEMENT LETTER

The Honorable County Commissioners
Sumter County, Florida

We have audited the financial statements of Sumter County, Florida (the "County") as of and for the fiscal year ended September 30, 2019, and have issued our report thereon dated April 6, 2020.

We conducted our audit in accordance with auditing standards generally accepted in the United States of America; the standards applicable to financial audits contained in *Government Auditing Standards*, issued by the Comptroller General of the United States; and Title 2 U.S Code of Federal Regulations Part 200, *Uniform Administrative Requirements, Cost Principles, and Audit Requirements for Federal Awards* (Uniform Guidance). Additionally, our audit was conducted in accordance with the provisions of Chapter 10.550, Rules of the Auditor General, which govern the conduct of local governmental entity audits performed in the State of Florida and require that certain items be addressed in this letter.

Prior Audit Findings

The Rules of the Auditor General require that we comment as to whether or not corrective actions have been taken to address findings and recommendations made in the preceding audit. If the audit findings in the preceding audit report are uncorrected, we are required to identify those findings that were also included in the second preceding audit report. The County has no uncorrected prior audit findings that are required to be identified pursuant to the Rules of the Auditor General.

Financial Condition

As required by the Rules of the Auditor General, the scope of our audit included a review of the provisions of Section 218.503, Florida Statutes, "Determination of Financial Emergency." In connection with our audit, we determined that the County has not met one or more of the conditions described in Section 218.503(1), Florida Statutes.

Also, as required by the Rules of the Auditor General, we applied financial condition assessment procedures, as of the end of the fiscal year, pursuant to Rule 10.556(8). It is management's responsibility to monitor financial condition, and our financial condition assessment was based in part on representations made by management and the review of financial information provided by management. The application of such procedures did not reveal evidence of "deteriorating financial condition" as that term is defined in Rule 10.554.

The following information is presented, for the County's convenience, to summarize financial position trends for the General Fund.

Fund Balance September 30, 2017	Fund Balance September 30, 2018	Fund Balance September 30, 2019
$ 28,629,716	$ 30,970,253	$ 30,531,517

Additionally, trend information relative to the General Fund is hereafter graphically displayed.

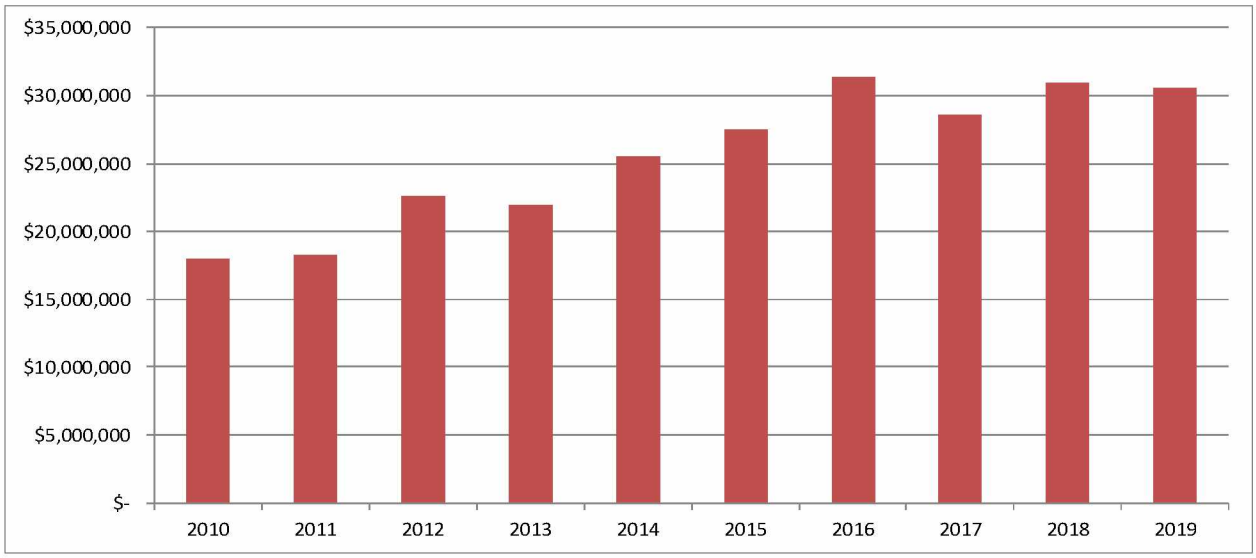

Other Matters

As required by the Rules of the Auditor General, we performed separate audits of each of the County's constitutional officers. Those separately-issued reports should be considered in conjunction with this management letter.

This management letter is intended solely for the information and use of the County and its management, and appropriate audit agencies and is not intended to be and should not be used by anyone other than these specified parties.

We wish to take this opportunity to thank you and your staff for the cooperation and courtesies extended to us during the course of the audit. Please let us know if you have any questions or comments concerning this letter, our accompanying reports, or other matters.

Carr, Riggs & Ingram, L.L.C.

Gainesville, Florida
April 6, 2020

CRI CARR RIGGS & INGRAM
CPAs and Advisors

Carr, Riggs & Ingram, LLC
4010 N.W. 25th Place
Gainesville, Florida 32606
P.O. Box 13494
Gainesville, Florida 32604

(352) 372-6300
(352) 375-1583 (fax)
www.cricpa.com

INDEPENDENT ACCOUNTANTS' REPORT ON COMPLIANCE WITH SECTION 218.415, FLORIDA STATUTES

The Honorable County Commissioners
Sumter County, Florida

We have examined Sumter County, Florida's (the "County") compliance with the requirements of Section 218.415, Florida Statutes, *Local Government Investment Policies*, during the year ended September 30, 2019. Management is responsible for the County's compliance with the specified requirements. Our responsibility is to express an opinion on the County's compliance with the specified requirements based on our examination.

Our examination was conducted in accordance with attestation standards established by the American Institute of Certified Public Accountants. Those standards require that we plan and perform the examination to obtain reasonable assurance about whether the County complied, in all material respects, with the specified requirements referenced above. An examination involves performing procedures to obtain evidence about whether the County complied with the specified requirements. The nature, timing, and extent of the procedures selected depend on our judgment, including an assessment of the risks of material noncompliance, whether due to fraud or error. We believe that the evidence we obtained is sufficient and appropriate to provide a reasonable basis for our opinion.

Our examination does not provide a legal determination on the County's compliance with specified requirements.

In our opinion, the County complied, in all material respects, with the aforementioned requirements for the year ended September 30, 2019.

This report is intended solely for the information and use of management and the State of Florida Auditor General, and is not intended to be and should not be used by anyone other than these specified parties.

Carr, Riggs & Ingram, L.L.C.

Gainesville, Florida
April 6, 2020

CRI CARR RIGGS & INGRAM
CPAs and Advisors

Carr, Riggs & Ingram, LLC
4010 N.W. 25th Place
Gainesville, Florida 32606
P.O. Box 13494
Gainesville, Florida 32604

(352) 372-6300
(352) 375-1583 (fax)
www.cricpa.com

INDEPENDENT ACCOUNTANTS' REPORT ON COMPLIANCE WITH SECTIONS 365.172(10 AND 365.173(2(d, FLORIDA STATUTES

The Honorable County Commissioners
Sumter County, Florida

We have examined Sumter County, Florida's (the County) compliance with the requirements of Section 365.172(10), Florida Statutes, *Authorized Expenditures of E911 Fee*, and Section 365.173(2)(d), Florida Statutes, *Distribution and Use of (E911) Funds,* during the year ended September 30, 2019. Management is responsible for the County's compliance with the specified requirements. Our responsibility is to express an opinion on the County's compliance with the specified requirements based on our examination.

Our examination was conducted in accordance with attestation standards established by the American Institute of Certified Public Accountants. Those standards require that we plan and perform the examination to obtain reasonable assurance about whether the County complied, in all material respects, with the specified requirements referenced above. An examination involves performing procedures to obtain evidence about whether the County complied with the specified requirements. The nature, timing, and extent of the procedures selected depend on our judgment, including an assessment of the risks of material noncompliance, whether due to fraud or error. We believe that the evidence we obtained is sufficient and appropriate to provide a reasonable basis for our opinion.

Our examination does not provide a legal determination on the County's compliance with specified requirements.

In our opinion, the County complied, in all material respects, with the aforementioned requirements for the year ended September 30, 2019.

This report is intended solely for the information and use of management and the State of Florida Auditor General, and is not intended to be and should not be used by anyone other than these specified parties.

Carr, Riggs & Ingram, L.L.C.

Gainesville, Florida
April 6, 2020

CRI CARR RIGGS & INGRAM
CPAs and Advisors

Carr, Riggs & Ingram, LLC
4010 N.W. 25th Place
Gainesville, Florida 32606
P.O. Box 13494
Gainesville, Florida 32604

(352) 372-6300
(352) 375-1583 (fax)
www.cricpa.com

INDEPENDENT AUDITORS' REPORT ON INTERNAL CONTROL OVER FINANCIAL REPORTING AND ON COMPLIANCE AND OTHER MATTERS BASED ON AN AUDIT OF FINANCIAL STATEMENTS PERFORMED IN ACCORDANCE WITH *GOVERNMENT AUDITING STANDARDS*

The Honorable County Commissioners
Sumter County, Florida

We have audited, in accordance with the auditing standards generally accepted in the United States of America and the standards applicable to financial audits contained in *Government Auditing Standards* issued by the Comptroller General of the United States, the financial statements of the governmental activities, each major fund, and the aggregate remaining fund information of Sumter County, Florida (the "County"), as of and for the year ended September 30, 2019, and the related notes to the financial statements, which collectively comprise the County's basic financial statements, and have issued our report thereon dated April 6, 2020.

Internal Control Over Financial Reporting

In planning and performing our audit of the financial statements, we considered the County's internal control over financial reporting (internal control) to determine the audit procedures that are appropriate in the circumstances for the purpose of expressing our opinions on the financial statements, but not for the purpose of expressing an opinion on the effectiveness of the County's internal control. Accordingly, we do not express an opinion on the effectiveness of the County's internal control.

A *deficiency in internal control* exists when the design or operation of a control does not allow management or employees, in the normal course of performing their assigned functions, to prevent, or detect and correct, misstatements on a timely basis. A *material weakness* is a deficiency, or a combination of deficiencies, in internal control, such that there is a reasonable possibility that a material misstatement of the entity's financial statements will not be prevented, or detected and corrected on a timely basis. A *significant deficiency* is a deficiency, or a combination of deficiencies, in internal control that is less severe than a material weakness, yet important enough to merit attention by those charged with governance.

Our consideration of internal control was for the limited purpose described in the first paragraph of this section and was not designed to identify all deficiencies in internal control that might be material weaknesses or significant deficiencies and therefore, material weaknesses or significant deficiencies may exist that have not been identified. We did identify a deficiency in internal control, described in the accompanying schedule of findings and questioned costs as item 2019-001 that we consider to be a material weaknesses.

Compliance and Other Matters

As part of obtaining reasonable assurance about whether the County's financial statements are free from material misstatement, we performed tests of its compliance with certain provisions of laws, regulations, contracts, and grant agreements, noncompliance with which could have a direct and material effect on the determination of financial statement amounts. However, providing an opinion on compliance with those provisions was not an objective of our audit, and accordingly, we do not express such an opinion. The results of our tests disclosed no instances of noncompliance or other matters that are required to be reported under *Government Auditing Standards*.

Sumter County, Florida's Response to Findings

The County's response to the findings identified in our audit is described in the accompanying schedule of findings and questioned costs. The County's response was not subjected to the auditing procedures applied in the audit of the financial statements and, accordingly, we express no opinion on it.

Purpose of this Report

The purpose of this report is solely to describe the scope of our testing of internal control and compliance and the results of that testing, and not to provide an opinion on the effectiveness of the County's internal control or on compliance. This report is an integral part of an audit performed in accordance with *Government Auditing Standards* in considering the entity's internal control and compliance. Accordingly, this communication is not suitable for any other purpose.

Carr, Riggs & Ingram, L.L.C.

Gainesville, Florida
April 6, 2020

CRI CARR RIGGS & INGRAM
CPAs and Advisors

Carr, Riggs & Ingram, LLC
4010 N.W. 25th Place
Gainesville, Florida 32606
P.O. Box 13494
Gainesville, Florida 32604

(352) 372-6300
(352) 375-1583 (fax)
www.cricpa.com

INDEPENDENT AUDITORS' REPORT ON COMPLIANCE FOR THE MAJOR FEDERAL PROGRAM AND EACH MAJOR STATE PROJECT AND ON INTERNAL CONTROL OVER COMPLIANCE REQUIRED BY THE UNIFORM GUIDANCE AND CHAPTER 10.550, RULES OF THE AUDITOR GENERAL

The Honorable County Commissioners
Sumter County, Florida

Report on Compliance for the Major Federal Program and Each Major State Project

We have audited the compliance of Sumter County, Florida (the "County") with the types of compliance requirements described in the OMB Compliance Supplement and the requirements described in the Department of Financial Services' State Projects Compliance Supplement that could have a direct and material effect on each of the County's major federal programs and each major state project for the year ended September 30, 2019. The County's major federal programs and major state projects are identified in the summary of auditors' results section of the accompanying Schedule of Findings and Questioned Costs.

Management's Responsibility

Management is responsible for compliance with federal and state statutes, regulations, and the terms and conditions of its federal and state awards applicable to its federal programs and state projects.

Auditors' Responsibility

Our responsibility is to express an opinion on compliance for each of the County's major federal programs and each major state project based on our audit of the types of compliance requirements referred to above. We conducted our audit of compliance in accordance with auditing standards generally accepted in the United States of America; the standards applicable to financial audits contained in *Government Auditing Standards*, issued by the Comptroller General of the United States; the audit requirements of Title 2 U.S Code of Federal Regulations Part 200, *Uniform Administrative Requirements, Cost Principles, and Audit Requirements for Federal Awards* (Uniform Guidance); and Chapter 10.550, Rules of the Auditor General. Those standards, the Uniform Guidance, and Chapter 10.550, Rules of the Auditor General, require that we plan and perform the audit to obtain reasonable assurance about whether noncompliance with the types of compliance requirements referred to above that could have a direct and material effect on each major federal program or major state project occurred. An audit includes examining, on a test basis, evidence about the County's compliance with those requirements and performing such other procedures as we considered necessary in the circumstances.

We believe that our audit provides a reasonable basis for our opinion on compliance for each major federal program and each major state project. However, our audit does not provide a legal determination of the County's compliance.

Opinion on the Major Federal Program and Each Major State Project

In our opinion, the County complied, in all material respects, with the types of compliance requirements referred to above that could have a direct and material effect on each of its major federal programs and each of its major state projects for the year ended September 30, 2019.

Report on Internal Control Over Compliance

Management of the County is responsible for establishing and maintaining effective internal control over compliance with the types of compliance requirements referred to above. In planning and performing our audit of compliance, we considered the County's internal control over compliance with the types of requirements that could have a direct and material effect on each major federal program and each major state project to determine the audit procedures that are appropriate in the circumstances for the purpose of expressing an opinion on compliance for each major federal program and each major state project and to test and report on internal control over compliance in accordance with the Uniform Guidance and Chapter 10.550, Rules of the Auditor General, but not for the purpose of expressing an opinion on the effectiveness of internal control over compliance. Accordingly, we do not express an opinion on the effectiveness of the County's internal control over compliance.

A *deficiency in internal control over compliance* exists when the design or operation of a control over compliance does not allow management or employees, in the normal course of performing their assigned functions, to prevent, or detect and correct, noncompliance with a type of compliance requirement of a federal program or state project on a timely basis. A *material weakness in internal control over compliance* is a deficiency, or combination of deficiencies, in internal control over compliance, such that there is a reasonable possibility that material noncompliance with a type of compliance requirement of a federal program or state project will not be prevented, or detected and corrected, on a timely basis. A *significant deficiency in internal control over compliance* is a deficiency, or a combination of deficiencies, in internal control over compliance with a type of compliance requirement of a federal program or state project that is less severe than a material weakness in internal control over compliance, yet important enough to merit attention by those charged with governance.

Our consideration of internal control over compliance was for the limited purpose described in the first paragraph of this section and was not designed to identify all deficiencies in internal control over compliance that might be material weaknesses or significant deficiencies. We did not identify any deficiencies in internal control over compliance that we consider to be material weaknesses. However, material weaknesses may exist that have not been identified.

The purpose of this report on internal control over compliance is solely to describe the scope of our testing of internal control over compliance and the results of that testing based on the requirements of the Uniform Guidance and Chapter 10.550, Rules of the Auditor General. Accordingly, this report is not suitable for any other purpose.

Carr, Riggs & Ingram, L.L.C.

Gainesville, Florida
April 6, 2020

PART I – SUMMARY OF AUDITORS' RESULTS

SECTION I–SUMMARY OF AUDITORS' RESULTS

Financial Statements

Type of auditors' report issued: Unmodified

Internal control over financial reporting:

- Material weakness(es) identified? _X_ yes ___ no
- Significant deficiency(es) identified? ___ yes _X_ none noted

Noncompliance material to financial statements noted? ___ yes _X_ no

Federal Awards and State Projects

Internal control over major federal programs and major state projects:

- Material weakness(es) identified? ___ yes _X_ no
- Significant deficiency(es) identified? ___ yes _X_ none noted

Type of auditors' report issued on compliance for major federal programs and major state projects: Unmodified

Any audit findings disclosed that are required to be reported in accordance with 2 CFR Part 200.516(a)? ___ yes _X_ none noted

Identification of major federal programs and major state projects:

Federal Program	CFDA Number
Highway Planning and Construction Cluster:	
Highway Planning and Construction (LAP Agreement)	20.205
Disaster Grants - Public Assistance (Presidentially Declared Disasters)	97.036

State Projects	CSFA Number
Small County Outreach Program (SCOP)	55.009

Dollar threshold used to distinguish between type A and B programs was $750,000 for major federal programs and $300,000 for major state projects.

Auditee qualified as a low-risk auditee for federal purposes? ___ yes _X_ no

SECTION II–FINANCIAL STATEMENT FINDINGS

2019-001 NET POSITION

Condition: The County's financial statements required a material restatement of beginning net position related to legal ownership of the rights-of-way and associated road infrastructure in the legal boundaries of the Community Development Districts in The Villages development.

Criteria: Section 218.33, *Florida Statutes,* requires that local government entities follow uniform accounting practices and procedures including the use of proper accounting and fiscal management, which includes establishing and maintaining effective internal control to help ensure that appropriate goals and objectives are met and ensuring that management and financial information is reliable and properly reported.

Cause: The Tri-County Villages, The Villages of Sumter, and The Villages of Wildwood Developments of Regional Impact Development Orders, and their amendments, contained conflicting language regarding which governmental entity would receive the dedication of the rights-of-way and associated road infrastructure. Sumter County's platting approval process included the acceptance for the maintenance of the roads regardless of which governmental entity owned the rights-of-way and infrastructure within them.

Effect: Current management identified the misstatement and correctly removed the capital assets from the County's records.

Recommendation: We recommend that the County continue to ensure the dedication language of rights-of-way is clearly defined in any future development orders or similar agreements.

Management Response: See response to Auditor General attached.

SECTION III–FEDERAL AWARD FINDINGS AND QUESTIONED COSTS

There were no findings relative to the federal program.

SECTION IV–STATE PROJECTS FINDINGS AND QUESTIONED COSTS

There were no findings relative to the federal program.

SECTION V- PRIOR FINDINGS AND QUESTIONED COSTS FOR FEDERAL AWARDS

No matters were reported

Board of County Commissioners
Sumter County, Florida

7375 Powell Road, Suite 200 • Wildwood, FL 34785 • Phone (352) 689-4400 • FAX: (352) 689-4401
Website: http://sumtercountyfl.gov

April 6, 2020

The Honorable Sherill F. Norman
Florida Auditor General
P.O. Box 1735
Tallahassee, Fl. 32302

Re: Audit for fiscal year ending September 30, 2019

Dear Ms. Norman:

Sumter County acknowledges receipt of the audit report for Sumter County Board of County Commissioners for the fiscal year ending September 30, 2019.

Tin accordance with Section 218.39, Florida Statutes, the following statement is submitted in response to the Financial Statement finding in the Auditor General Audit Report for fiscal year ending September 30, 2019. The response is keyed to the numbering of the Schedule of Findings:

2019-001 The County will continue to ensure the dedication language of rights-of-way is clearly defined in any future development orders or similar agreements.

Very truly yours,

Steve Printz
Chairman

Gloria R. Hayward
Clerk of the Circuit Court

Al Butler, Dist 1
2nd Vice Chairman
(352) 689-4400
7375 Powell Road
Wildwood, FL 34785

Doug Gilpin, Dist 2
(352) 689-4400
7375 Powell Road
Wildwood, FL 34785

Don Burgess, Dist 3
(352) 689-4400
7375 Powell Road
Wildwood, FL 34785

Garry Breeden, Dist 4
Vice Chairman
(352) 689-4400
7375 Powell Road
Wildwood, FL 34785

Steve Printz, Dist 5
Chairman
(352) 689-4400
7375 Powell Road
Wildwood, FL 34785

Bradley S. Arnold,
County Administrator
(352) 689-4400
7375 Powell Road
Wildwood, FL 34785

Gloria R. Hayward, Clerk & Auditor
(352) 569-6600
215 East McCollum Avenue
Bushnell, FL 33513

County Attorney
The Hogan Law Firm
Post Office Box 485
Brooksville, Florida 34605

Sumter County, Florida
Clerk of the Circuit Court

Audit Report

September 30, 2019

CRI CARR RIGGS & INGRAM

CPAs and Advisors

CRIcpa.com

Table of Contents
September 30, 2019

REPORT
Independent Auditors' Report 1

FINANCIAL STATEMENTS
Governmental Funds:

Balance Sheet 4

Statement of Revenues, Expenditures and Changes in Fund Balances 5

Fiduciary Funds:

Statement of Fiduciary Net Position 6

Notes to Financial Statements 7

REQUIRED SUPPLEMENTARY INFORMATION
Schedule of Revenues, Expenditures and Changes in Fund Balances – Budget and Actual – General Fund 11

Schedule of Revenues, Expenditures and Changes in Fund Balances – Budget and Actual – Fine & Forfeiture Fund 12

Schedule of Revenues, Expenditures and Changes in Fund Balances – Budget and Actual – Records Modernization Fund 13

Schedule of Revenues, Expenditures and Changes in Fund Balances – Budget and Actual – Court Technology Fund 14

SUPPLEMENTARY INFORMATION
Combining Statement of Fiduciary Net Position – Agency Funds 15

ADDITIONAL ELEMENTS REQUIRED BY THE RULES OF THE AUDITOR GENERAL
Management Letter 16

Independent Auditors' Report on Internal Control Over Financial Reporting and on Compliance and Other Matters Based on an Audit of Financial Statements Performed in Accordance with *Government Auditing Standards* 17

Independent Accountants' Report on Compliance with Section 218.415, Florida Statutes 19

Independent Accountants' Report on Compliance with Sections 28.35 and 28.36, Florida Statutes 20

Independent Accountants' Report on Compliance with Section 61.181, Florida Statutes 21

Elected Official's Response to Auditors' Comments --

CRI CARR RIGGS & INGRAM
CPAs and Advisors

Carr, Riggs & Ingram, LLC
4010 N.W. 25th Place
Gainesville, Florida 32606
P.O. Box 13494
Gainesville, Florida 32604

(352) 372-6300
(352) 375-1583 (fax)
www.cricpa.com

INDEPENDENT AUDITORS' REPORT

The Honorable Gloria R. Hayward
Clerk of the Circuit Court
Sumter County, Florida

Report on the Financial Statements

We have audited the accompanying financial statements of each major fund and the aggregate remaining fund information of the Sumter County, Florida Clerk of the Circuit Court (the "Office") as of and for the year ended September 30, 2019, and the related notes to the financial statements, which collectively comprise the Office's financial statements as listed in the table of contents.

Management's Responsibility for the Financial Statements

Management is responsible for the preparation and fair presentation of these financial statements in accordance with accounting principles generally accepted in the United States of America; this includes the design, implementation, and maintenance of internal control relevant to the preparation and fair presentation of financial statements that are free from material misstatement, whether due to fraud or error.

Auditors' Responsibility

Our responsibility is to express opinions on these financial statements based on our audit. We conducted our audit in accordance with auditing standards generally accepted in the United States of America and the standards applicable to financial audits contained in *Government Auditing Standards*, issued by the Comptroller General of the United States. Those standards require that we plan and perform the audit to obtain reasonable assurance about whether the financial statements are free from material misstatement.

An audit involves performing procedures to obtain audit evidence about the amounts and disclosures in the financial statements. The procedures selected depend on the auditors' judgment, including the assessment of the risks of material misstatement of the financial statements, whether due to fraud or error. In making those risk assessments, the auditor considers internal control relevant to the entity's preparation and fair presentation of the financial statements in order to design audit procedures that are appropriate in the circumstances, but not for the purpose of expressing an opinion on the effectiveness of the entity's internal control. Accordingly, we express no such opinion. An audit also includes evaluating the appropriateness of accounting policies used and the reasonableness of significant accounting estimates made by management, as well as evaluating the overall presentation of the financial statements.

We believe that the audit evidence we have obtained is sufficient and appropriate to provide a basis for our audit opinions.

Opinions

In our opinion, the financial statements referred to above present fairly, in all material respects, the respective financial position of each major fund and the aggregate remaining fund information of the Office as of September 30, 2019, and the respective changes in financial position, where applicable, thereof for the year then ended in accordance with accounting principles generally accepted in the United States of America.

Emphasis of Matter

As discussed in Note 1 to the financial statements, the financial statements referred to above were prepared solely for the purpose of complying with the Rules of the Auditor General of the State of Florida. In conformity with the Rules, the accompanying financial statements are intended to present the financial position and changes in financial position, where applicable, of each major fund, and the aggregate remaining fund information, only for that portion of each major fund, and the aggregate remaining fund information, of Sumter County, Florida, that is attributable to the Office. They do not purport to, and do not, present fairly the financial position of Sumter County, Florida, as of September 30, 2019, and the changes in its financial position, where applicable, for the fiscal year then ended in accordance with accounting principles generally accepted in the United States of America. Our opinions are not modified with respect to this matter.

Other Matters

Required Supplementary Information

Accounting principles generally accepted in the United States of America require that the budgetary comparison schedules, as listed in the table of contents, be presented to supplement the financial statements. Such information, although not a required part of the financial statements, is required by the Governmental Accounting Standards Board, who considers it to be an essential part of financial reporting for placing the financial statements in an appropriate operational, economic, or historical context. We have applied certain limited procedures to the required supplementary information in accordance with auditing standards generally accepted in the United States of America, which consisted of inquiries of management about the methods of preparing the information and comparing the information for consistency with management's responses to our inquiries, the financial statements, and other knowledge we obtained during our audit of the financial statements. We do not express an opinion or provide any assurance on the information because the limited procedures do not provide us with sufficient evidence to express an opinion or provide any assurance.

Other Information

Our audit was conducted for the purpose of forming opinions on the financial statements that collectively comprise the Office's financial statements. The combining statement is presented for purposes of additional analysis and is not a required part of the financial statements.

The combining statement is the responsibility of management and was derived from and relates directly to the underlying accounting and other records used to prepare the financial statements. Such information has been subjected to the auditing procedures applied in the audit of the financial statements and certain additional procedures, including comparing and reconciling such information directly to the underlying accounting and other records used to prepare the financial statements or the financial statements themselves, and other additional procedures in accordance with auditing standards generally accepted in the United States of America. In our opinion, the combining statement is fairly stated in all material respects in relation to the financial statements as a whole.

Other Reporting Required by *Government Auditing Standards*

In accordance with *Government Auditing Standards*, we have also issued our report dated March 30, 2020 on our consideration of the Office's internal control over financial reporting and on our tests of its compliance with certain provisions of laws, regulations, contracts, and grant agreements and other matters. The purpose of that report is solely to describe the scope of our testing of internal control over financial reporting and compliance and the results of that testing, and not to provide an opinion on the effectiveness of the Office's internal control over financial reporting or on compliance. That report is an integral part of an audit performed in accordance with *Government Auditing Standards* in considering the Office's internal control over financial reporting and compliance.

Carr, Riggs & Ingram, L.L.C.

Gainesville, Florida
March 30, 2020

Balance Sheet – Governmental Funds
September 30, 2019

	General Fund	Fine & Forfeiture Fund	Records Modern-ization Fund	Court Technology Fund	Total Govern-mental Funds
Assets					
Cash and equivalents	$ 430,147	$ 356,251	$ 526,516	$ 1,042,887	$ 2,355,801
Due from other funds	-	60,537	6,312	17,900	84,749
Due from other governments	5,060	24,193	-	-	29,253
Total assets	$ 435,207	$ 440,981	$ 532,828	$ 1,060,787	$ 2,469,803
Liabilities and fund balances					
Liabilities:					
Accounts payable and accrued liabilities	$ 54,736	$ 38,446	$ -	$ 24,791	$ 117,973
Due to other county agencies	374,880	210,295	-	-	585,175
Total liabilities	429,616	248,741	-	24,791	703,148
Fund balances:					
Restricted	5,591	192,240	532,828	1,035,996	1,766,655
Total liabilities and fund balances	$ 435,207	$ 440,981	$ 532,828	$ 1,060,787	$ 2,469,803

The accompanying "Notes to Financial Statements" form an integral part of this statement.

Statement of Revenues, Expenditures and Changes in Fund Balances
Governmental Funds
Year ended September 30, 2019

	General Fund	Fine & Forfeiture Fund	Records Modern-ization Fund	Court Technology Fund	Total Govern-mental Funds
Revenues					
Intergovernmental	$ -	$ 191,939	$ -	$ -	$ 191,939
Charges for services	-	1,212,045	75,622	210,533	1,498,200
Fines and forfeitures	-	812,215	-	-	812,215
Miscellaneous revenue	-	34,843	45	92	34,980
Total revenues	-	2,251,042	75,667	210,625	2,537,334
Expenditures					
Current:					
General government	1,678,846	-	15,424	-	1,694,270
Court related	33,788	1,908,561	-	137,783	2,080,132
Total expenditures	1,712,634	1,908,561	15,424	137,783	3,774,402
Excess of revenues over (under) expenditures	(1,712,634)	342,481	60,243	72,842	(1,237,068)
Other financing sources (uses)					
Appropriation from board of county commissioners	1,838,213	36,745	-	-	1,874,958
Reversion to clerks of court operations corporation	-	(450,846)	-	-	(450,846)
Reversion to board of county commissioners	(130,028)	(166)	-	-	(130,194)
Total other financing sources (uses)	1,708,185	(414,267)	-	-	1,293,918
Net change in fund balances	(4,449)	(71,786)	60,243	72,842	56,850
Fund balances – beginning of year	10,040	264,026	472,585	963,154	1,709,805
Fund balances – end of year	$ 5,591	$ 192,240	$ 532,828	$1,035,996	$1,766,655

The accompanying "Notes to Financial Statements" form an integral part of this statement.

Sumter County, Florida Clerk of the Circuit Court

Statement of Fiduciary Net Position
September 30, 2019

		Agency Funds
Assets		
Cash and equivalents	$	2,696,884
Liabilities		
Assets held for others		2,526,407
Due to other funds		84,749
Due to other county agencies		85,728
Total liabilities		2,696,884
Net position	$	-

The accompanying "Notes to Financial Statements" form an integral part of this statement.

NOTE 1 – SUMMARY OF SIGNIFICANT ACCOUNTING POLICIES

The accounting policies of the office of the Sumter County, Florida Clerk of the Circuit Court (the "Office") conform to generally accepted accounting principles as applicable to governments. The following is a summary of the more significant policies.

Reporting Entity

The Clerk of the Circuit Court is an elected constitutional officer, whose office is established by Article VIII of the Constitution of the State of Florida and is governed by various provisions of state law.

The Office is an integral part of Sumter County, Florida, which is the primary government for financial reporting purposes.

Basis of Presentation

The Office's financial statements have been prepared solely for the purpose of complying with the Rules of the Auditor General of the State of Florida (the "Rules"). These financial statements are the fund financial statements required by generally accepted accounting principles. However, these fund statements do not constitute a complete presentation because, in conformity with the Rules, the Office has not presented reconciliations to the government-wide financial statements, the government-wide financial statements, management's discussion and analysis, or the pension or the other post-employment benefit related required supplementary information. Also, certain notes to the financial statements may supplement rather than duplicate the notes included in the County's countywide financial statements. In conformity with the Rules, the accompanying financial statements are intended to present the financial position and changes in financial position, where applicable, of each major fund, and the aggregate remaining fund information, only for that portion of each major fund, and the aggregate remaining fund information, of Sumter County, Florida, that is attributable to the Office. They do not purport to, and do not, present fairly the financial position of Sumter County, Florida, as of September 30, 2019, and the changes in its financial position, where applicable, for the fiscal year then ended in accordance with accounting principles generally accepted in the United States of America.

Fund Accounting

Accounts are organized on the basis of funds, each of which is considered a separate accounting entity. The operations of each fund are accounted for with a separate set of self-balancing accounts that comprise its assets, liabilities, fund equity, revenues, and expenditures. Government resources are allocated to, and accounted for in, individual funds based upon the purposes for which they are to be spent and the means by which spending activities are controlled. The focus of fund financial statements is on major funds, each displayed in a separate column. All nonmajor funds are aggregated and displayed in a single column.

The Office reports the following major governmental funds:

General Fund – The General Fund is the primary operating fund. It is used to account for and report all financial resources not accounted for and reported in another fund.

Fine and Forfeiture Fund – This fund is used to account for appropriations from the State of Florida and court fees to fund court expenditures.

Records Modernization Fund – This fund is used to account for fees collected and associated expenditures related to equipment upgrades and modernization of all official records of the County.

NOTE 1 – SUMMARY OF SIGNIFICANT ACCOUNTING POLICIES (CONTINUED)

Court Technology Fund – This fund is used to account for additional service charges and fines collected and associated expenditures used exclusively to fund the court-related technology needs and court-related program enhancements of the Office.

The Office also reports the following fiduciary funds:

Agency Funds – Agency Funds are used to account for resources held by the Office in a custodial capacity.

Fund Balance

The Office follows the provisions of GASB Statement No. 54, *Fund Balance Reporting and Governmental Fund Type Definitions* to classify fund balances for governmental funds into specifically defined classifications. The classifications comprise a hierarchy based primarily on the extent to which the Office is bound to honor constraints on the specific purposes for which amounts in the funds can be spent.

The fund balance classifications specified in GASB Statement No. 54 are as follows:

Nonspendable Fund Balance – Nonspendable fund balances are amounts that cannot be spent because they are either (a) not in spendable form or (b) legally or contractually required to be maintained intact.

Restricted Fund Balance – Restricted fund balances are restricted when constraints placed on the use of resources are either: (a) externally imposed by creditors, grantors, contributors, or laws or regulations of other governments; or (b) imposed by law through constitutional provisions or enabling legislation.

Committed Fund Balance – Committed fund balances are amounts that can only be used for specific purposes as a result of constraints imposed by formal action of the Office's highest level of decision-making authority, which is a policy of the Office. Committed amounts cannot be used for any other purpose unless the Office removes those constraints by taking the same type of action.

Assigned Fund Balance – Assigned fund balances are amounts that are constrained by the Office's intent to be used for specific purposes, but are neither restricted nor committed. Intent is expressed by (a) the constitutional officer or (b) a body or official to which the constitutional officer has delegated the authority to assign amounts to be used for specific purposes.

Unassigned Fund Balance – Unassigned fund balance is the residual classification for the General Fund.

The Office's policy is to expend resources in the following order: restricted, committed, assigned, and unassigned.

Measurement Focus/Basis of Accounting

All governmental funds are accounted for on a current financial resources measurement focus. This means that only current assets and current liabilities are generally included on their balance sheets. Their reported fund balance (net current assets) is considered a measure of "available spendable resources." Their operating statements present increases (revenues and other financing sources) and decreases (expenditures and other financing uses) in net current assets and, accordingly, are said to present a summary of sources and uses of "available spendable resources" during a period.

NOTE 1 – SUMMARY OF SIGNIFICANT ACCOUNTING POLICIES (CONTINUED)

Basis of accounting refers to when revenues and expenditures are recognized in the accounts and reported in the financial statements. Basis of accounting relates to the timing of the measurements made, regardless of the measurement focus applied.

All governmental funds are accounted for using the modified accrual basis of accounting. Their revenues are recognized when they become measurable and available as net current assets. Expenditures are generally recognized under the modified accrual basis of accounting when the related fund liability is incurred. However, principal and interest on long-term debt are recognized when due.

Agency fund assets and liabilities are accounted for on the accrual basis of accounting.

Capital Assets and Long-Term Liabilities

Because of the current financial resources measurement focus, the accompanying fund financial statements do not report capital assets or long-term liabilities. Such amounts are instead reported in the government-wide financial statements of the County.

Cash and Cash Equivalents

All cash and cash equivalents are placed in a bank that qualifies as a public depository pursuant to the provisions of the Florida Security for Public Deposits Act. Every qualified public depository is required by this law to deposit with the Chief Financial Officer eligible collateral equal to, or in excess of, an amount to be determined by the Chief Financial Officer. The Chief Financial Officer is required to ensure that all funds are entirely insured or collateralized throughout the fiscal year.

Use of Estimates

The preparation of financial statements in conformity with generally accepted accounting principles requires management to make various estimates. Actual results could differ from those estimates.

NOTE 2 – INTERFUND BALANCES

The following interfund balances arose during the normal course of operations of the Office.

	Due From Other Funds	Due To Other Funds
Fine & forfeiture fund	$ 60,537	$ -
Records modernization fund	6,312	-
Court technology fund	17,900	-
Agency funds - Trust fund	-	84,749
Total	$ 84,749	$ 84,749

All interfund balances are expected to be liquidated fully within the subsequent fiscal year.

NOTE 3 – FUND BALANCE CLASSIFICATIONS

Details of restricted fund balance at September 30, 2019 are as follows:

	General Fund	Fine & Forfeiture Fund	Records Modern-ization Fund	Court Technology Fund	Total
Restricted for:					
Teen court	$ 5,591	$ -	$ -	$ -	$ 5,591
Court operations	-	192,240	-	-	192,240
Court technology	-	-	-	1,035,996	1,035,996
Records modernization	-	-	532,828	-	532,828
Total fund balances	$ 5,591	$ 192,240	$ 532,828	$ 1,035,996	$ 1,766,655

NOTE 4 – RISK MANAGEMENT

For health insurance, the Office participates in the risk management program established by the Board of County Commissioners to cover claims against the Board and Constitutional Officers. The risk management program is accounted for in the Board's financial statements as an Internal Service Fund, in accordance with requirements of GASB Statement 10.

For risks of loss related to workers' compensation, general liability and errors or omissions, the Office participates with the Board of County Commissioners to purchase commercial insurance. For the past three years, there have been no insurance settlements in excess of insurance coverages.

Required Supplementary Information

Schedule of Revenues, Expenditures and Changes in Fund Balances
Budget and Actual – General Fund
Year ended September 30, 2019

	Budgeted Amounts			Variance
	Original	Final	Actual	With Final Budget
Revenues				
	$ -	$ -	$ -	$ -
Expenditures				
Current:				
General government	1,804,022	1,804,022	1,678,846	125,176
Court related	34,191	34,191	33,788	403
Total expenditures	1,838,213	1,838,213	1,712,634	125,579
Excess of revenues over (under) expenditures	(1,838,213)	(1,838,213)	(1,712,634)	125,579
Other financing sources (uses)				
Appropriation from board of county commissioners	1,838,213	1,838,213	1,838,213	-
Reversion to board of county commissioners	-	-	(130,028)	(130,028)
Total other financing sources (uses)	1,838,213	1,838,213	1,708,185	(130,028)
Net change in fund balances	-	-	(4,449)	(4,449)
Fund balances - beginning of year	-	-	10,040	10,040
Fund balances - end of year	$ -	$ -	$ 5,591	$ 5,591

Notes to Schedule:

The budget is prepared on a basis that does not differ materially from generally accepted accounting principles. Its preparation, adoption, and amendment is governed by Florida Statutes. The fund is the legal level of control.

Schedule of Revenues, Expenditures and Changes in Fund Balances
Budget and Actual – Fine & Forfeiture Fund
Year ended September 30, 2019

	Budgeted Amounts			Variance
	Original	Final	Actual	With Final Budget
Revenues				
Intergovernmental	$ 139,867	$ 139,867	$ 191,939	$ 52,072
Charges for services	1,280,000	1,280,000	1,212,045	(67,955)
Fines and forfeitures	858,000	858,000	812,215	(45,785)
Miscellaneous	2,600	2,600	34,843	32,243
Total revenues	2,280,467	2,280,467	2,251,042	(29,425)
Expenditures				
Current:				
Court related	2,254,578	2,254,578	1,908,561	346,017
Excess of revenues over (under) expenditures	25,889	25,889	342,481	316,592
Other financing sources (uses)				
Appropriation from board of county commissioners	36,745	36,745	36,745	-
Reversion to clerks of court operations corporation	(62,634)	(62,634)	(450,846)	(388,212)
Reversion to board of county commissioners	-	-	(166)	(166)
Total other financing sources (uses)	(25,889)	(25,889)	(414,267)	(388,378)
Net change in fund balances	-	-	(71,786)	(71,786)
Fund balances – beginning of year	-	-	264,026	264,026
Fund balances – end of year	$ -	$ -	$ 192,240	$ 192,240

Notes to Schedule:

Pursuant to Section 28.36, Florida Statutes, the budget is subject to the General Appropriations Act of the Florida Legislature and is prepared on a basis that does not differ materially from generally accepted accounting principles. The State of Florida releases from this appropriation on a monthly basis. The fund is the legal level of control.

Schedule of Revenues, Expenditures and Changes in Fund Balances
Budget and Actual – Records Modernization Fund
Year ended September 30, 2019

	Budgeted Amounts			Variance
	Original	Final	Actual	With Final Budget
Revenues				
Charges for services	$ 80,000	$ 80,000	$ 75,622	$ (4,378)
Miscellaneous revenues	40	40	45	5
Total revenues	80,040	80,040	75,667	(4,373)
Expenditures				
Current:				
General government	552,625	552,625	15,424	537,201
Excess of revenues over (under) expenditures	(472,585)	(472,585)	60,243	532,828
Fund balances – beginning of year	472,585	472,585	472,585	-
Fund balances – end of year	$ -	$ -	$ 532,828	$ 532,828

Notes to Schedule:

The budget is prepared on a basis that does not differ materially from generally accepted accounting principles. Its preparation, adoption, and amendment is governed by Florida Statutes. The fund is the legal level of control.

Schedule of Revenues, Expenditures and Changes in Fund Balances
Budget and Actual – Court Technology Fund
Year ended September 30, 2019

	Budgeted Amounts			Variance
	Original	Final	Actual	With Final Budget
Revenues				
Charges for services	$ 215,000	$ 215,000	$ 210,533	$ (4,467)
Miscellaneous revenues	85	85	92	7
Total revenues	215,085	215,085	210,625	(4,460)
Expenditures				
Current:				
Court related	1,178,239	1,178,239	137,783	1,040,456
Excess of revenues over (under) expenditures	(963,154)	(963,154)	72,842	1,035,996
Fund balances – beginning of year	963,154	963,154	963,154	-
Fund balances – end of year	$ -	$ -	$ 1,035,996	$ 1,035,996

Notes to Schedule:

The budget is prepared on a basis that does not differ materially from generally accepted accounting principles. Its preparation, adoption, and amendment is governed by Florida Statutes. The fund is the legal level of control.

Supplementary Information

Sumter County, Florida Clerk of the Circuit Court

Combining Statement of Fiduciary Net Position

Agency Funds

September 30, 2019

	Trust Fund	Court Registry Fund	Total
Assets			
Cash and equivalents	$ 1,981,318	$ 715,566	$ 2,696,884
Liabilities			
Assets held for others	1,810,841	715,566	2,526,407
Due to other funds	84,749	-	84,749
Due to other county agencies	85,728	-	85,728
Total liabilities	1,981,318	715,566	2,696,884
Net position	$ -	$ -	$ -

Additional Elements Required by the Rules of the Auditor General

CRI CARR RIGGS & INGRAM
CPAs and Advisors

Carr, Riggs & Ingram, LLC
4010 N.W. 25th Place
Gainesville, Florida 32606
P.O. Box 13494
Gainesville, Florida 32604

(352) 372-6300
(352) 375-1583 (fax)
www.cricpa.com

MANAGEMENT LETTER

The Honorable Gloria R. Hayward
Clerk of the Circuit Court
Sumter County, Florida

Report on the Financial Statements

We have audited the financial statements of the Sumter County, Florida, Clerk of the Circuit Court (the "Office"), as of and for the year ended September 30, 2019, and have issued our report thereon dated March 30, 2020.

Auditors' Responsibility

We conducted our audit in accordance with auditing standards generally accepted in the United States of America and the standards applicable to financial audits contained in *Government Auditing Standards*, issued by the Comptroller General of the United States and Chapter 10.550, Rules of the Auditor General.

Other Reporting Requirements

We have issued our Independent Auditors' Report on Internal Control over Financial Reporting and on Compliance and Other Matters Based on an Audit of the Financial Statements Performed in Accordance with *Government Auditing Standards;* and Independent Accountants' Report on an examination conducted in accordance with *AICPA Professional Standards*, AT-C Section 315, regarding compliance requirements in accordance with Chapter 10.550, Rules of the Auditor General. Disclosures in this report and schedule, which are dated March 30, 2020, should be considered in conjunction with this management letter.

Prior Audit Findings

Section 10.554(1)(i)1., Rules of the Auditor General, requires that we determine whether or not corrective actions have been taken to address findings and recommendations made in the preceding annual financial audit report. If the audit findings in the preceding audit are uncorrected, we are required to identify those findings that were also included in the second preceding audit report. The Office has no uncorrected prior audit findings that are required to be identified.

Financial Management

Section 10.554(1)(i)2., Rules of the Auditor General, requires that we communicate any recommendations to improve financial management. In connection with our audit, we did not have any such recommendations.

Additional Matters

Section 10.554(1)(i)3., Rules of the Auditor General, requires us to communicate noncompliance with provisions of contracts or grant agreements, or abuse, that have occurred, or are likely to have occurred, that have an effect on the financial statements that is less than material but which warrants the attention of those charged with governance. In connection with our audit, we did not note any such findings.

Purpose of this Letter

Our management letter is intended solely for the information and use of the Legislative Auditing Committee, members of the Florida Senate and the Florida House of Representatives, the Florida Auditor General, the Sumter County, Florida Clerk of the Circuit Court, and applicable management, and is not intended to be and should not be used by anyone other than these specified parties.

Carr, Riggs & Ingram, L.L.C.

Gainesville, Florida
March 30, 2020

CRI CARR RIGGS & INGRAM
CPAs and Advisors

Carr, Riggs & Ingram, LLC
4010 N.W. 25th Place
Gainesville, Florida 32606
P.O. Box 13494
Gainesville, Florida 32604

(352) 372-6300
(352) 375-1583 (fax)
www.cricpa.com

INDEPENDENT AUDITORS' REPORT ON INTERNAL CONTROL OVER FINANCIAL REPORTING AND ON COMPLIANCE AND OTHER MATTERS BASED ON AN AUDIT OF FINANCIAL STATEMENTS PERFORMED IN ACCORDANCE WITH *GOVERNMENT AUDITING STANDARDS*

The Honorable Gloria R. Hayward
Clerk of the Circuit Court
Sumter County, Florida

We have audited, in accordance with the auditing standards generally accepted in the United States of America and the standards applicable to financial audits contained in *Government Auditing Standards* issued by the Comptroller General of the United States, the financial statements of each major fund and the aggregate remaining fund information of the office of the Sumter County, Florida Clerk of the Circuit Court (the "Office"), as of and for the year ended September 30, 2019, and the related notes to the financial statements, which collectively comprise the Office's financial statements, and have issued our report thereon dated March 30, 2020.

Internal Control Over Financial Reporting

In planning and performing our audit of the financial statements, we considered the Office's internal control over financial reporting (internal control) to determine the audit procedures that are appropriate in the circumstances for the purpose of expressing our opinions on the financial statements, but not for the purpose of expressing an opinion on the effectiveness of the Office's internal control. Accordingly, we do not express an opinion on the effectiveness of the Office's internal control.

A *deficiency in internal control* exists when the design or operation of a control does not allow management or employees, in the normal course of performing their assigned functions, to prevent, or detect and correct, misstatements on a timely basis. A *material weakness* is a deficiency, or a combination of deficiencies, in internal control, such that there is a reasonable possibility that a material misstatement of the entity's financial statements will not be prevented, or detected and corrected on a timely basis. A *significant deficiency* is a deficiency, or a combination of deficiencies, in internal control that is less severe than a material weakness, yet important enough to merit attention by those charged with governance.

Our consideration of internal control was for the limited purpose described in the first paragraph of this section and was not designed to identify all deficiencies in internal control that might be material weaknesses or significant deficiencies. Given these limitations, during our audit we did not identify any deficiencies in internal control that we consider to be material weaknesses. However, material weaknesses may exist that have not been identified.

Compliance and Other Matters

As part of obtaining reasonable assurance about whether the Office's financial statements are free from material misstatement, we performed tests of its compliance with certain provisions of laws, regulations, contracts, and grant agreements, noncompliance with which could have a direct and material effect on the determination of financial statement amounts. However, providing an opinion on compliance with those provisions was not an objective of our audit, and accordingly, we do not express such an opinion. The results of our tests disclosed no instances of noncompliance or other matters that are required to be reported under *Government Auditing Standards*.

Purpose of this Report

The purpose of this report is solely to describe the scope of our testing of internal control and compliance and the results of that testing, and not to provide an opinion on the effectiveness of the entity's internal control or on compliance. This report is an integral part of an audit performed in accordance with *Government Auditing Standards* in considering the entity's internal control and compliance. Accordingly, this communication is not suitable for any other purpose.

Carr, Riggs & Ingram, L.L.C

Gainesville, Florida
March 30, 2020

CRI CARR RIGGS & INGRAM
CPAs and Advisors

Carr, Riggs & Ingram, LLC
4010 N.W. 25th Place
Gainesville, Florida 32606
P.O. Box 13494
Gainesville, Florida 32604

(352) 372-6300
(352) 375-1583 (fax)
www.cricpa.com

INDEPENDENT ACCOUNTANTS' REPORT ON COMPLIANCE WITH SECTION 218.415, FLORIDA STATUTES

The Honorable Gloria R. Hayward
Clerk of the Circuit Court
Sumter County, Florida

We have examined the office of the Sumter County, Florida Clerk of the Circuit Court's (the "Office") compliance with the requirements of Section 218.415, Florida Statutes, *Local Government Investment Policies*, during the year ended September 30, 2019. Management of the Office is responsible for the Office's compliance with the specified requirements. Our responsibility is to express an opinion on the Office's compliance with the specified requirements based on our examination.

Our examination was conducted in accordance with attestation standards established by the American Institute of Certified Public Accountants. Those standards require that we plan and perform the examination to obtain reasonable assurance about whether the Office complied, in all material respects, with the specified requirements referenced above. An examination involves performing procedures to obtain evidence about whether the Office complied with the specified requirements. The nature, timing, and extent of the procedures selected depend on our judgment, including an assessment of the risks of material noncompliance, whether due to fraud or error. We believe that the evidence we obtained is sufficient and appropriate to provide a reasonable basis for our opinion.

Our examination does not provide a legal determination on the Office's compliance with specified requirements.

In our opinion, the Office complied, in all material respects, with the requirements of Section 218.415, Florida Statutes, *Local Government Investment* Policies, for the year ended September 30, 2019.

This report is intended solely for the information and use of management and the State of Florida Auditor General, and is not intended to be and should not be used by anyone other than these specified parties.

Carr, Riggs & Ingram, L.L.C.

Gainesville, Florida
March 30, 2020

CRI CARR RIGGS & INGRAM
CPAs and Advisors

Carr, Riggs & Ingram, LLC
4010 N.W. 25th Place
Gainesville, Florida 32606
P.O. Box 13494
Gainesville, Florida 32604

(352) 372-6300
(352) 375-1583 (fax)
www.cricpa.com

INDEPENDENT ACCOUNTANTS' REPORT ON COMPLIANCE WITH SECTIONS 28.35 AND 28.36, FLORIDA STATUTES

The Honorable Gloria R. Hayward
Clerk of the Circuit Court
Sumter County, Florida

We have examined the office of the Sumter County, Florida Clerk of the Circuit Court's (the "Office") compliance with the requirements of Section 28.35, Florida Statutes, *Florida Clerks of Court Operations Corporation*, and Section 28.36, Florida Statutes, *Budget Procedure,* during the year ended September 30, 2019. Management of the Office is responsible for the Office's compliance with the specified requirements. Our responsibility is to express an opinion on the Office's compliance with the specified requirements based on our examination.

Our examination was conducted in accordance with attestation standards established by the American Institute of Certified Public Accountants. Those standards require that we plan and perform the examination to obtain reasonable assurance about whether the Office complied, in all material respects, with the specified requirements referenced above. An examination involves performing procedures to obtain evidence about whether the Office complied with the specified requirements. The nature, timing, and extent of the procedures selected depend on our judgment, including an assessment of the risks of material noncompliance, whether due to fraud or error. We believe that the evidence we obtained is sufficient and appropriate to provide a reasonable basis for our opinion.

Our examination does not provide a legal determination on the Office's compliance with specified requirements.

In our opinion, the Office complied, in all material respects, with the requirements of Section 28.35, Florida Statutes, *Florida Clerks of Court Operations Corporation*, and Section 28.36, Florida Statutes, *Budget Procedure*, for the year ended September 30, 2019.

This report is intended solely for the information and use of management and the State of Florida Auditor General, and is not intended to be and should not be used by anyone other than these specified parties.

Carr, Riggs & Ingram, L.L.C

Gainesville, Florida
March 30, 2020

CRI CARR RIGGS & INGRAM
CPAs and Advisors

Carr, Riggs & Ingram, LLC
4010 N.W. 25th Place
Gainesville, Florida 32606
P.O. Box 13494
Gainesville, Florida 32604

(352) 372-6300
(352) 375-1583 (fax)
www.cricpa.com

INDEPENDENT ACCOUNTANTS' REPORT ON COMPLIANCE WITH SECTION 61.181, FLORIDA STATUTES

The Honorable Gloria R. Hayward
Clerk of the Circuit Court
Sumter County, Florida

We have examined the office of the Sumter County, Florida Clerk of the Circuit Court's the "Office" compliance with the requirements of Section 61.181, Florida Statutes, *Depository for Alimony Transactions, Support, Maintenance, and Support*, *Payments; Fees,* during the year ended September 30, 2019. Management of the Office is responsible for the Office's compliance with the specified requirements. Our responsibility is to express an opinion on the Office's compliance with the specified requirements based on our examination.

Our examination was conducted in accordance with attestation standards established by the American Institute of Certified Public Accountants. Those standards require that we plan and perform the examination to obtain reasonable assurance about whether the Office complied, in all material respects, with the specified requirements referenced above. An examination involves performing procedures to obtain evidence about whether the Office complied with the specified requirements. The nature, timing, and extent of the procedures selected depend on our judgment, including an assessment of the risks of material noncompliance, whether due to fraud or error. We believe that the evidence we obtained is sufficient and appropriate to provide a reasonable basis for our opinion.

Our examination does not provide a legal determination on the Office's compliance with specified requirements.

In our opinion, the Office complied, in all material respects, with the requirements of Section 61.181, Florida Statutes, *Depository for Alimony Transactions, Support, Maintenance, and Support*, *Payments*, for the year ended September 30, 2019

This report is intended solely for the information and use of management and the State of Florida Auditor General, and is not intended to be and should not be used by anyone other than these specified parties.

Carr, Riggs & Ingram, L.L.C.

Gainesville, Florida
March 30, 2020

Sumter County Clerk's Office

215 E McCollum Ave
Bushnell, FL 33513

Phone: 352-569-6600
Courts: 352-569-6810
Finance: 352-569-6810
Fax: 352-569-6601

www.sumterclerk.com

March 30, 2020

Auditor General
C/o Sherrill F. Norman, CPA
Post Office Box 1735
Tallahassee, Florida 32302

RE: Sumter County Clerk of Circuit Court Annual Audit Report for the fiscal year 18/19

Dear Auditor General:

This is to acknowledge receipt of the audit report by Carr, Riggs, & Ingram, LLC for the office of Clerk of the Circuit Court, Sumter County, Florida, for the fiscal year ending September 30, 2019.

Another year with several financial changes on our courtside budget process. I am pleased that we have completed another year with no audit issues.

I appreciate all the time and effort that goes into the audit process and the feedback, which is very helpful during the year.

Respectfully yours,

GLORIA R. HAYWARD
Clerk of the Circuit Court
Sumter County, Florida

CIRCUIT COURT CLERK SUMTER COUNTY FLORIDA

Sumter County, Florida Sheriff

Audit Report

September 30, 2019

Table of Contents
September 30, 2019

REPORT
Independent Auditors' Report 1

FINANCIAL STATEMENTS
Governmental Funds:

Balance Sheet 4

Statement of Revenues, Expenditures and Changes in Fund Balances 5

Fiduciary Funds:

Statement of Fiduciary Net Position 6

Notes to Financial Statements 7

REQUIRED SUPPLEMENTARY INFORMATION
Schedule of Revenues, Expenditures and Changes in Fund Balances – Budget and Actual – General Fund 11

Schedule of Revenues, Expenditures and Changes in Fund Balances – Budget and Actual – Inmate Welfare Fund 12

SUPPLEMENTARY INFORMATION
Combining Balance Sheet - Nonmajor Governmental Funds 13

Combining Statement of Revenues, Expenditures and Changes in Fund Balances – Nonmajor Governmental Funds 14

Combining Statement of Fiduciary Net Position – Agency Funds 15

ADDITIONAL ELEMENTS REQUIRED BY THE RULES OF THE AUDITOR GENERAL
Management Letter 16

Independent Auditors' Report on Internal Control Over Financial Reporting and on Compliance and Other Matters Based on an Audit of Financial Statements Performed in Accordance with *Government Auditing Standards* 18

Independent Accountants' Report on Compliance with Section 218.415, Florida Statutes 20

Schedule of Findings 21

Elected Official's Response to Auditors' Comments --

CRI CARR RIGGS & INGRAM
CPAs and Advisors

Carr, Riggs & Ingram, LLC
4010 N.W. 25th Place
Gainesville, Florida 32606
P.O. Box 13494
Gainesville, Florida 32604

(352) 372-6300
(352) 375-1583 (fax)
www.cricpa.com

INDEPENDENT AUDITORS' REPORT

The Honorable William O. Farmer, Jr.
Sheriff
Sumter County, Florida

Report on the Financial Statements

We have audited the accompanying financial statements of each major fund and the aggregate remaining fund information of the office of the Sumter County, Florida, Sheriff (the "Office") as of and for the year ended September 30, 2019, and the related notes to the financial statements, which collectively comprise the Office's financial statements as listed in the table of contents.

Management's Responsibility for the Financial Statements

Management is responsible for the preparation and fair presentation of these financial statements in accordance with accounting principles generally accepted in the United States of America; this includes the design, implementation, and maintenance of internal control relevant to the preparation and fair presentation of financial statements that are free from material misstatement, whether due to fraud or error.

Auditors' Responsibility

Our responsibility is to express opinions on these financial statements based on our audit. We conducted our audit in accordance with auditing standards generally accepted in the United States of America and the standards applicable to financial audits contained in *Government Auditing Standards*, issued by the Comptroller General of the United States. Those standards require that we plan and perform the audit to obtain reasonable assurance about whether the financial statements are free from material misstatement.

An audit involves performing procedures to obtain audit evidence about the amounts and disclosures in the financial statements. The procedures selected depend on the auditors' judgment, including the assessment of the risks of material misstatement of the financial statements, whether due to fraud or error. In making those risk assessments, the auditor considers internal control relevant to the entity's preparation and fair presentation of the financial statements in order to design audit procedures that are appropriate in the circumstances, but not for the purpose of expressing an opinion on the effectiveness of the entity's internal control. Accordingly, we express no such opinion. An audit also includes evaluating the appropriateness of accounting policies used and the reasonableness of significant accounting estimates made by management, as well as evaluating the overall presentation of the financial statements.

We believe that the audit evidence we have obtained is sufficient and appropriate to provide a basis for our audit opinions.

Opinions

In our opinion, the financial statements referred to above present fairly, in all material respects, the respective financial position of each major fund and the aggregate remaining fund information of the Office as of September 30, 2019, and the respective changes in financial position, where applicable, thereof for the year then ended in accordance with accounting principles generally accepted in the United States of America.

Emphasis of Matter

As discussed in Note 1 to the financial statements, the financial statements referred to above were prepared solely for the purpose of complying with the Rules of the Auditor General of the State of Florida. In conformity with the Rules, the accompanying financial statements are intended to present the financial position and changes in financial position, where applicable, of each major fund and the aggregate remaining fund information, only for that portion of each major fund and the aggregate remaining fund information, of Sumter County, Florida, that is attributable to the Office. They do not purport to, and do not, present fairly the financial position of Sumter County, Florida, as of September 30, 2019, and the changes in its financial position, where applicable, for the fiscal year then ended in accordance with accounting principles generally accepted in the United States of America. Our opinions are not modified with respect to this matter.

Other Matters

Required Supplementary Information

Accounting principles generally accepted in the United States of America require that the budgetary comparison information be presented to supplement the financial statements. Such information, although not a required part of the financial statements, is required by the Governmental Accounting Standards Board, who considers it to be an essential part of financial reporting for placing the financial statements in an appropriate operational, economic, or historical context. We have applied certain limited procedures to the required supplementary information in accordance with auditing standards generally accepted in the United States of America, which consisted of inquiries of management about the methods of preparing the information and comparing the information for consistency with management's responses to our inquiries, the financial statements, and other knowledge we obtained during our audit of the financial statements. We do not express an opinion or provide any assurance on the information because the limited procedures do not provide us with sufficient evidence to express an opinion or provide any assurance.

Other Information

Our audit was conducted for the purpose of forming opinions on the financial statements that collectively comprise the Office's financial statements. The Combining Statements are presented for purposes of additional analysis and are not a required part of the financial statements. The Combining Statements are the responsibility of management and were derived from and relate directly to the underlying accounting and other records used to prepare the financial statements. Such information has been subjected to the auditing procedures applied in the audit of the financial statements and certain additional procedures, including comparing and reconciling such information directly to the underlying accounting and other records used to prepare the financial statements or to the financial statements themselves, and other additional procedures in accordance with auditing standards generally accepted

in the United States of America. In our opinion, the information is fairly stated in all material respects in relation to the financial statements as a whole.

Other Reporting Required by *Government Auditing Standards*

In accordance with *Government Auditing Standards*, we have also issued our report dated March 26, 2020, on our consideration of the Office's internal control over financial reporting and on our tests of its compliance with certain provisions of laws, regulations, contracts, and grant agreements and other matters. The purpose of that report is solely to describe the scope of our testing of internal control over financial reporting and compliance and the results of that testing, and not to provide an opinion on the effectiveness of the Office's internal control over financial reporting or on compliance. That report is an integral part of an audit performed in accordance with *Government Auditing Standards* in considering the Office's internal control over financial reporting and compliance.

Carr, Riggs & Ingram, L.L.C

Gainesville, Florida
March 26, 2020

Balance Sheet – Governmental Funds
Septmber 30, 2019

	General Fund	Inmate Welfare Fund	Nonmajor Funds	Total Governmental Funds
Assets				
Cash and equivalents	$ 1,875,546	$ 488,121	$ 28,160	$ 2,391,827
Due from other county agencies	113,075	-	-	113,075
Due from other governments	156,783	-	15,504	172,287
Due from other funds	52,479	-	-	52,479
Accounts receivable, net	26,701	69,887	-	96,588
Total assets	$ 2,224,584	$ 558,008	$ 43,664	$ 2,826,256
Liabilities and fund balances				
Liabilities:				
Accounts payable and accrued liabilities	$ 918,199	$ 835	$ -	$ 919,034
Due to other funds	-	36,975	15,504	52,479
Due to other county agencies	1,306,385	-	-	1,306,385
Total liabilities	2,224,584	37,810	15,504	2,277,898
Fund balances:				
Restricted:				
Federal shared funds	-	-	28,160	28,160
Assigned:				
Benefit of inmates	-	520,198	-	520,198
Total fund balances	-	520,198	28,160	548,358
Total liabilities and fund balances	$ 2,224,584	$ 558,008	$ 43,664	$ 2,826,256

The accompanying "Notes to Financial Statements" form an integral part of this statement.

Statement of Revenues, Expenditures and Changes in Fund Balances
Governmental Funds
Year ended September 30, 2019

	General Fund	Inmate Welfare Fund	Nonmajor Funds	Total Governmental Funds
Revenues				
Intergovernmental	$ 76,065	$ -	$ 71,550	$ 147,615
Charges for services	-	155,928	-	155,928
Miscellaneous	455,880	319,492	82	775,454
Total revenues	531,945	475,420	71,632	1,078,997
Expenditures				
Current:				
Public safety	31,319,948	296,227	71,550	31,687,725
Court costs	1,292,302	-	-	1,292,302
Total expenditures	32,612,250	296,227	71,550	32,980,027
Excess of revenues over (under) expenditures	(32,080,305)	179,193	82	(31,901,030)
Other financing sources (uses)				
Appropriation from board of county commissioners	32,725,099	-	-	32,725,099
Reversion to board of county commissioners	(656,232)	-	-	(656,232)
Total other financing sources (uses)	32,068,867	-	-	32,068,867
Net change in fund balances	(11,438)	179,193	82	167,837
Fund balances – beginning of year	11,438	341,005	28,078	380,521
Fund balances – end of year	$ -	$ 520,198	$ 28,160	$ 548,358

The accompanying "Notes to Financial Statements" form an integral part of this statement.

Statement of Fiduciary Net Position
September 30, 2019

		Agency Funds
Assets		
Cash and equivalents	$	254,135
Liabilities		
Assets held for others		254,135
Net position	$	-

The accompanying "Notes to Financial Statements" form an integral part of this statement.

NOTE 1 – SUMMARY OF SIGNIFICANT ACCOUNTING POLICIES

The accounting policies of the office of the Sumter County, Florida Sheriff (the "Office") conform to generally accepted accounting principles as applicable to governments. The following is a summary of the more significant policies.

Reporting Entity

The Sheriff is an elected constitutional officer, whose office is established by Article VIII of the Constitution of the State of Florida and is governed by various provisions of state law.

The Office is an integral part of Sumter County, Florida, which is the primary government for financial reporting purposes.

Basis of Presentation

The Office's financial statements have been prepared solely for the purpose of complying with Rules of the Auditor General of the State of Florida (the "Rules"). These financial statements are the fund statements required by generally accepted accounting principles. However, these fund statements do not constitute a complete presentation because, in conformity with the Rules, the Office has not presented reconciliations to the government-wide financial statements, the government-wide financial statements, management's discussion and analysis, or the pension or the other post-employment benefit related required supplementary information. Also, certain notes to the financial statements may supplement rather than duplicate the notes included in the County's countywide financial statements. In conformity with the Rules, the accompanying financial statements are intended to present the financial position and changes in financial position, where applicable, of each major fund, and the aggregate remaining fund information, only for that portion of each major fund, and the aggregate remaining fund information, of Sumter County, Florida, that is attributable to the Office. They do not purport to, and do not, present fairly the financial position of Sumter County, Florida, as of September 30, 2019, and the changes in its financial position, where applicable, for the fiscal year then ended in accordance with accounting principles generally accepted in the United States of America.

Fund Accounting

Accounts are organized on the basis of funds, each of which is considered a separate accounting entity. The operations of each fund are accounted for with a separate set of self-balancing accounts that comprise its assets, liabilities, fund equity, revenues, and expenditures. Government resources are allocated to, and accounted for in, individual funds based upon the purposes for which they are to be spent and the means by which spending activities are controlled. The focus of fund financial statements is on major funds, each displayed in a separate column. All nonmajor funds are aggregated and displayed in a single column.

The Office reports the following major governmental funds:

General Fund – The General Fund is the primary operating fund. It is used to account for and report all financial resources not accounted for and reported in another fund.

Inmate Welfare Fund – The Inmate Welfare Fund is used to account for canteen and telephone commissions and their subsequent expenditure for the benefit of inmates.

The Office also reports the following fiduciary funds:

Agency Funds – Agency Funds are used to account for assets held in a custodial capacity.

NOTE 1 – SUMMARY OF SIGNIFICANT ACCOUNTING POLICIES (CONTINUED)

Fund Balance

The Office follows the provisions of GASB Statement No. 54, *Fund Balance Reporting and Governmental Fund Type Definitions* to classify fund balances for governmental funds into specifically defined classifications. The classifications comprise a hierarchy based primarily on the extent to which the Office is bound to honor constraints on the specific purposes for which amounts in the funds can be spent.

The fund balance classifications specified in GASB Statement No. 54 are as follows:

Nonspendable Fund Balance – Nonspendable fund balances are amounts that cannot be spent because they are either (a) not in spendable form or (b) legally or contractually required to be maintained intact.

Restricted Fund Balance – Restricted fund balances are restricted when constraints placed on the use of resources are either: (a) externally imposed by creditors, grantors, contributors, or laws or regulations of other governments; or (b) imposed by law through constitutional provisions or enabling legislation.

Committed Fund Balance – Committed fund balances are amounts that can only be used for specific purposes as a result of constraints imposed by formal action of the Office's highest level of decision-making authority, which is a policy of the Office. Committed amounts cannot be used for any other purpose unless the Office removes those constraints by taking the same type of action.

Assigned Fund Balance – Assigned fund balances are amounts that are constrained by the Office's intent to be used for specific purposes, but are neither restricted nor committed. Intent is expressed by (a) the constitutional officer or (b) a body or official to which the constitutional officer has delegated the authority to assign amounts to be used for specific purposes.

Unassigned Fund Balance – Unassigned fund balance is the residual classification for the General Fund.

The Office's policy is to expend resources in the following order: restricted, committed, assigned, and unassigned.

Measurement Focus/Basis of Accounting

All governmental funds are accounted for on a current financial resources measurement focus. This means that only current assets and current liabilities are generally included on their balance sheets. Their reported fund balance (net current assets) is considered a measure of "available spendable resources." Their operating statements present increases (revenues and other financing sources) and decreases (expenditures and other financing uses) in net current assets and, accordingly, are said to present a summary of sources and uses of "available spendable resources" during a period.

NOTE 1 – SUMMARY OF SIGNIFICANT ACCOUNTING POLICIES (CONTINUED)

Basis of accounting refers to when revenues and expenditures are recognized in the accounts and reported in the financial statements. Basis of accounting relates to the timing of the measurements made, regardless of the measurement focus applied.

All governmental funds are accounted for using the modified accrual basis of accounting. Their revenues are recognized when they become measurable and available as net current assets. Expenditures are generally recognized under the modified accrual basis of accounting when the related fund liability is incurred. However, principal and interest on long-term debt are recognized when due.

Agency fund assets and liabilities are accounted for on the accrual basis of accounting.

Capital Assets and Long-Term Liabilities

Because of the current financial resources measurement focus, the accompanying fund financial statements do not report capital assets or long-term liabilities. Such amounts are instead reported in the government-wide financial statements of the County.

Cash and Equivalents

All cash and equivalents are placed in a bank that qualifies as a public depository pursuant to the provisions of the Florida Security For Public Deposits Act. Every qualified public depository is required by law to deposit with the Chief Financial Officer eligible collateral equal to, or in excess of, an amount to be determined by the Chief Financial Officer. The Chief Financial Officer is required to ensure that all funds are entirely insured or collateralized throughout the fiscal year.

Use of Estimates

The preparation of financial statements in conformity with generally accepted accounting principles requires management to make various estimates. Actual results could differ from those estimates.

NOTE 2 – INTERFUND BALANCES

The following interfund balances arose during the normal course of operations of the Office. These funds are expected to be repaid within the next year.

	Due from other funds	Due to other funds
General fund	$ 52,479	$ -
Inmate welfare fund	-	36,975
Nonmajor governmental:		
Victim's advocacy grant fund	-	15,504
Total	$ 52,479	$ 52,479

NOTE 3 – RISK MANAGEMENT

For health insurance, the Office participates in the risk management program established by the Board of County Commissioners to cover claims against the Board and Constitutional Officers. The risk management program is accounted for in the Board's financial statements as an Internal Service Fund, in accordance with requirements of GASB Statement 10.

The Office participates in the Florida Sheriffs' self-insurance fund for risks related to workers' compensation, general liability, professional police and automobile liability. There have been no settlements that exceeded coverage in the last three years.

Required Supplementary Information

Schedule of Revenues, Expenditures and Changes in Fund Balances
Budget and Actual – General Fund
Year ended September 30, 2019

	Budgeted Amounts			Variance
	Original	Final	Actual	With Final Budget
Revenues				
Intergovernmental	$ -	$ -	$ 76,065	$ 76,065
Miscellaneous	25,735	25,735	455,880	430,145
Total revenues	25,735	25,735	531,945	506,210
Expenditures				
Public safety	31,450,418	31,450,418	31,319,948	130,470
Court costs	1,300,416	1,300,416	1,292,302	8,114
Total expenditures	32,750,834	32,750,834	32,612,250	138,584
Excess of revenues over (under) expenditures	(32,725,099)	(32,725,099)	(32,080,305)	644,794
Other financing sources (uses)				
Appropriation from board of county commissioners	32,725,099	32,725,099	32,725,099	-
Reversion to board of county commissioners	-	-	(656,232)	(656,232)
Total other financing sources (uses)	32,725,099	32,725,099	32,068,867	(656,232)
Net change in fund balances	-	-	(11,438)	(11,438)
Fund balances – beginning of year	-	-	11,438	11,438
Fund balances – end of year	$ -	$ -	$ -	$ -

Notes to Schedule:

The budget is prepared on a basis that does not differ materially from generally accepted accounting principles. Its preparation, adoption, and amendment is governed by Florida Statutes. The fund is the legal level of control.

Schedule of Revenues, Expenditures and Changes in Fund Balances
Budget and Actual – Inmate Welfare Fund
Year ended September 30, 2019

	Budgeted Amounts			Variance
	Original	Final	Actual	With Final Budget
Revenues				
Charges for services	$ 70,000	$ 70,000	$ 155,928	$ 85,928
Miscellaneous	306,000	306,000	319,492	13,492
Total revenues	376,000	376,000	475,420	99,420
Expenditures				
Public safety	528,382	528,382	296,227	232,155
Excess of revenues over (under) expenditures	(152,382)	(152,382)	179,193	331,575
Fund balances – beginning of year	341,005	341,005	341,005	-
Fund balances – end of year	$ 188,623	$ 188,623	$ 520,198	$ 331,575

Notes to Schedule:

The budget is prepared on a basis that does not differ materially from generally accepted accounting principles. Its preparation, adoption, and amendment is governed by Florida Statutes. The fund is the legal level of control.

Supplementary Information

Combining Balance Sheet
Nonmajor Governmental Funds
September 30, 2019

	Federal Shared Fund	Victim's Advocacy Grant Fund	Total Nonmajor Governmental Funds
Assets			
Cash and equivalents	$ 28,160	$ -	$ 28,160
Due from other governments	-	15,504	15,504
Total assets	$ 28,160	$ 15,504	$ 43,664
Liabilities and fund balances			
Liabilities:			
Due to other funds	$ -	$ 15,504	$ 15,504
Fund balances:			
Restricted:			
Federal shared funds	28,160	-	28,160
Total liabilities and fund balances	$ 28,160	$ 15,504	$ 43,664

Combining Statement of Revenues, Expenditures and Changes in Fund Balances
Nonmajor Governmental Funds
Year ended September 30, 2019

	Federal Shared Fund	Victim's Advocacy Grant Fund	Total Nonmajor Governmental Funds
Revenues			
Intergovernmental	$ -	$ 71,550	$ 71,550
Miscellaneous	82	-	82
Total revenues	82	71,550	71,632
Expenditures			
Current:			
Public safety	-	71,550	71,550
Excess of revenues over expenditures	82	-	82
Fund balances – beginning of year	28,078	-	28,078
Fund balances – end of year	$ 28,160	$ -	$ 28,160

Combining Statement of Fiduciary Net Position
Agency Funds
September 30, 2019

	Trust Fund	Inmate Fund	Unclaimed Evidence Fund	Total Agency Funds
Assets				
Cash and equivalents	$ 607	$ 15,975	$ 237,553	$ 254,135
Liabilities				
Assets held for others	607	15,975	237,553	254,135
Net position	$ -	$ -	$ -	$ -

Additional Elements Required by the Rules of the Auditor General

CRI CARR RIGGS & INGRAM
CPAs and Advisors

Carr, Riggs & Ingram, LLC
4010 N.W. 25th Place
Gainesville, Florida 32606
P.O. Box 13494
Gainesville, Florida 32604

(352) 372-6300
(352) 375-1583 (fax)
www.cricpa.com

MANAGEMENT LETTER

Honorable William O. Farmer, Jr.
Sheriff
Sumter County, Florida

Report on the Financial Statements

We have audited the financial statements of the Sumter County, Florida, Sheriff (the "Office"), as of and for the year ended September 30, 2019, and have issued our report thereon dated March 26, 2020.

Auditors' Responsibility

We conducted our audit in accordance with auditing standards generally accepted in the United States of America and the standards applicable to financial audits contained in *Government Auditing Standards*, issued by the Comptroller General of the United States and Chapter 10.550, Rules of the Auditor General.

Other Reporting Requirements

We have issued our Independent Auditors' Report on Internal Control over Financial Reporting and on Compliance and Other Matters Based on an Audit of the Financial Statements Performed in Accordance with *Government Auditing Standards;* and Independent Accountants' Report on an examination conducted in accordance with *AICPA Professional Standards*, AT-C Section 315, regarding compliance requirements in accordance with Chapter 10.550, Rules of the Auditor General. Disclosures in this report and schedule, which are dated March 26, 2020, should be considered in conjunction with this management letter.

Prior Audit Findings

Section 10.554(1)(i)1., Rules of the Auditor General, requires that we determine whether or not corrective actions have been taken to address findings and recommendations made in the preceding annual financial audit report. If the audit findings in the preceding audit are uncorrected, we are required to identify those findings that were also included in the second preceding audit report. These requirements of the Rules of the Auditor General are addressed in the accompanying Schedule of Findings. Findings 2018-001 and 2018-002 are repeated, while finding 2018-003 was corrected.

Financial Management

Section 10.554(1)(i)2., Rules of the Auditor General, requires that we communicate any recommendations to improve financial management. In connection with our audit, we did not have any such recommendations.

Additional Matters

Section 10.554(1)(i)3., Rules of the Auditor General, requires us to communicate noncompliance with provisions of contracts or grant agreements, or abuse, that have occurred, or are likely to have occurred, that have an effect on the financial statements that is less than material but which warrants the attention of those charged with governance. In connection with our audit, we did not note any such findings.

Purpose of this Letter

Our management letter is intended solely for the information and use of the Legislative Auditing Committee, members of the Florida Senate and the Florida House of Representatives, the Florida Auditor General, the Sumter County, Florida Sheriff, and applicable management, and is not intended to be and should not be used by anyone other than these specified parties.

Carr, Riggs & Ingram, L.L.C.

Gainesville, Florida
March 26, 2020

CRI CARR RIGGS & INGRAM
CPAs and Advisors

Carr, Riggs & Ingram, LLC
4010 N.W. 25th Place
Gainesville, Florida 32606
P.O. Box 13494
Gainesville, Florida 32604

(352) 372-6300
(352) 375-1583 (fax)
www.cricpa.com

INDEPENDENT AUDITORS' REPORT ON INTERNAL CONTROL OVER FINANCIAL REPORTING AND ON COMPLIANCE AND OTHER MATTERS BASED ON AN AUDIT OF FINANCIAL STATEMENTS PERFORMED IN ACCORDANCE WITH *GOVERNMENT AUDITING STANDARDS*

The Honorable William O. Farmer, Jr.
Sheriff
Sumter County, Florida

We have audited, in accordance with the auditing standards generally accepted in the United States of America and the standards applicable to financial audits contained in *Government Auditing Standards* issued by the Comptroller General of the United States, the financial statements of each major fund and the aggregate remaining fund information of the office of the Sumter County, Florida Sheriff (the "Office"), as of and for the year ended September 30, 2019, and the related notes to the financial statements, which collectively comprise the Office's financial statements, and have issued our report thereon dated March 26, 2020.

Internal Control Over Financial Reporting

In planning and performing our audit of the financial statements, we considered the Office's internal control over financial reporting (internal control) to determine the audit procedures that are appropriate in the circumstances for the purpose of expressing our opinions on the financial statements, but not for the purpose of expressing an opinion on the effectiveness of the Office's internal control. Accordingly, we do not express an opinion on the effectiveness of the Office's internal control.

Our consideration of internal control was for the limited purpose described in the preceding paragraph and was not designed to identify all deficiencies in internal control that might be material weaknesses or significant deficiencies and therefore, material weaknesses or significant deficiencies may exist that have not been identified. However, as described in the accompanying schedule of findings, we identified certain deficiencies in internal control that we consider to be material weaknesses and significant deficiencies.

A *deficiency in internal control* exists when the design or operation of a control does not allow management or employees, in the normal course of performing their assigned functions, to prevent, or detect and correct, misstatements on a timely basis. A *material weakness* is a deficiency, or a combination of deficiencies, in internal control such that there is a reasonable possibility that a material misstatement of the entity's financial statements will not be prevented, or detected and corrected on a timely basis. We consider the deficiencies described in the accompanying schedule of findings as items 2019-001 and 2019-002 to be material weaknesses.

A significant deficiency is a deficiency, or a combination of deficiencies, in internal control that is less severe than a material weakness, yet important enough to merit attention by those charged with governance. We consider the deficiency described in the accompany schedule of findings as item 2019-003 to be a significant deficiency.

Compliance and Other Matters

As part of obtaining reasonable assurance about whether the Office's financial statements are free from material misstatement, we performed tests of its compliance with certain provisions of laws, regulations, contracts, and grant agreements, noncompliance with which could have a direct and material effect on the determination of financial statement amounts. However, providing an opinion on compliance with those provisions was not an objective of our audit, and accordingly, we do not express such an opinion. The results of our tests disclosed no instances of noncompliance or other matters that are required to be reported under *Government Auditing Standards*.

Office's Response to Findings

The Office's response to the findings identified in our audit is described in its accompanying letter of response. The Office's response was not subjected to the auditing procedures applied in the audit of the financial statements and, accordingly, we express no opinion on it.

Purpose of this Report

The purpose of this report is solely to describe the scope of our testing of internal control and compliance and the results of that testing, and not to provide an opinion on the effectiveness of the Office's internal control or on compliance. This report is an integral part of an audit performed in accordance with *Government Auditing Standards* in considering the entity's internal control and compliance. Accordingly, this communication is not suitable for any other purpose.

Carr, Riggs & Ingram, L.L.C.

Gainesville, Florida
March 26, 2020

CRI CARR RIGGS & INGRAM
CPAs and Advisors

Carr, Riggs & Ingram, LLC
4010 N.W. 25th Place
Gainesville, Florida 32606
P.O. Box 13494
Gainesville, Florida 32604

(352) 372-6300
(352) 375-1583 (fax)
www.cricpa.com

INDEPENDENT ACCOUNTANTS' REPORT ON COMPLIANCE WITH SECTION 218.415, FLORIDA STATUTES

To The Honorable William O. Farmer, Jr.
Sheriff
Sumter County, Florida

We have examined the office of the Sumter County, Florida Sheriff's (the "Office") compliance with the requirements of Section 218.415, Florida Statutes, *Local Government Investment Policies*, during the year ended September 30, 2019. Management is responsible for the Office's compliance with the specified requirements. Our responsibility is to express an opinion on the Office's compliance with the specified requirements based on our examination.

Our examination was conducted in accordance with attestation standards established by the American Institute of Certified Public Accountants. Those standards require that we plan and perform the examination to obtain reasonable assurance about whether the Office complied, in all material respects, with the specified requirements referenced above. An examination involves performing procedures to obtain evidence about whether the Office complied with the specified requirements. The nature, timing, and extent of the procedures selected depend on our judgment, including an assessment of the risks of material noncompliance, whether due to fraud or error. We believe that the evidence we obtained is sufficient and appropriate to provide a reasonable basis for our opinion.

Our examination does not provide a legal determination on the Office's compliance with specified requirements.

In our opinion, the Office complied, in all material respects, with the aforementioned requirements for the year ended September 30, 2019.

This report is intended solely for the information and use of management and the State of Florida Auditor General, and is not intended to be and should not be used by anyone other than these specified parties.

Carr, Riggs & Ingram, L.L.C

Gainesville, Florida
March 26, 2020

2019-001 **Material Weakness in Segregation of Duties**

(Reported in previous audit reports as item 2018-001 and 2017-001)

Criteria – The Office is responsible for maintaining effective internal controls over financial transactions and reporting.

Condition – Because of a limited number of available personnel, it is not always possible to adequately segregate certain incompatible duties so that no one employee has access to both physical assets and the related accounting records, or to all phases of a transaction.

Cause – Limited number of finance personnel.

Effect – Risk of misappropriation of assets or misstatements of financial information is elevated.

Recommendation – Whenever possible, duties should be segregated so that no one employee has access to both physical assets and the related accounting records, or to all phases of a transaction.

2019-002 **Material Weakness in Service Organization Internal Control Monitoring**

(Reported in previous audit reports as item 2018-002 and 2017-002)

Criteria – The Office is responsible for maintaining effective internal controls over financial transactions and reporting.

Condition – The Office contracts with service organizations to provide commissary and telephone services to inmates. The Office does not monitor internal controls of the service organizations over revenue collection and remittance. A service contract was not available between the Office and the commissary provider

Cause – The service organizations do not provide SOC-1, Type 2 reports for the services they provide to the Office and the Office has not taken alternative steps to identify and monitor relevant controls.

Effect – Risk of misappropriation of assets or understatement of revenue earned related to inmate commissary and telephone services is elevated.

Recommendation – The Office should request an annual SOC-1, Type 2 report from each of the service organizations and should implement and monitor relevant user controls. If such a report is unavailable, the Office should take alternative steps to understand and monitor the controls at the service organizations and to identify, implement, and monitor the relevant user controls. CRI recommends establishing a written contract with the provider.

2019-003 **Significant Deficiency in Bank Reconciliation**

Criteria – The Office is responsible for maintaining effective internal controls over financial transactions and reporting.

Condition – The Office had an erroneous deposit in transit that increased the cash balance in error, requiring a journal entry to correct.

Cause – The Office maintained the deposit in transit without appropriate support.

Effect – The risk of misappropriation of assets or errors in cash is elevated.

Recommendation – The Office should monitor internal controls over bank reconciliations, including maintaining support for all outstanding transactions and have established review processes to detect error or fraud.

SUMTER COUNTY SHERIFF'S OFFICE

WILLIAM O. "BILL" FARMER JR., SHERIFF

7361 Powell Rd
Wildwood, FL 34785
www.sumtercountysheriff.org

March 26, 2020

Sherrill F. Norman, CPA
Office of the Auditor General
Claude Pepper Building
111 West Madison Street
Tallahassee, FL 32399

Honorable Sherrill F. Norman:

The Sumter County Sheriff's Office has been presented with the audit report for the fiscal year ended September 30, 2019. As a result of the audit findings, the Sheriff's Office has responded as follows:

2019-001 Responsibilities and controls within the finance department continue to be reevaluated to improve controls and properly segregate duties with the limited number of personnel.

2019-002 To the extent possible, the finance department is monitoring revenue from both service organizations. Additionally, the Sheriff's Office is continuing to request the organizations to provide a SOC-I Type II Report.

2019-003 Internal controls have been established for a secondary review of the Commissary bank reconciliation by the Finance Director. The issue identified by the auditor was also identified by the Finance Director through the review process however it was not resolved before yearend resulting in this finding.

James C. Haworth,

Sumter County Sheriff, Chief Deputy

Sumter County, Florida
Tax Collector

Audit Report

September 30, 2019

Table of Contents
September 30, 2019

REPORT

Independent Auditors' Report 1

FINANCIAL STATEMENTS

Governmental Fund:

Balance Sheet 3

Statement of Revenues, Expenditures and Changes in Fund Balance 4

Fiduciary Fund:

Statement of Fiduciary Net Position 5

Notes to Financial Statements 6

REQUIRED SUPPLEMENTARY INFORMATION

Schedule of Revenues, Expenditures and Changes in Fund Balances – Budget and Actual – General Fund 9

ADDITIONAL ELEMENTS REQUIRED BY THE RULES OF THE AUDITOR GENERAL

Management Letter 10

Independent Auditors' Report on Internal Control Over Financial Reporting and on Compliance and Other Matters Based on an Audit of Financial Statements Performed in Accordance with *Government Auditing Standards* 12

Independent Accountants' Report on Compliance with Section 218.415, Florida Statutes 14

Elected Official's Response to Auditors' Comments --

CRI CARR RIGGS & INGRAM
CPAs and Advisors

Carr, Riggs & Ingram, LLC
4010 N.W. 25th Place
Gainesville, Florida 32606
P.O. Box 13494
Gainesville, Florida 32604

(352) 372-6300
(352) 375-1583 (fax)
www.cricpa.com

INDEPENDENT AUDITORS' REPORT

The Honorable Randy Mask
Tax Collector
Sumter County, Florida

Report on the Financial Statements

We have audited the accompanying financial statements of the major fund and the aggregate remaining fund information of the office of the Sumter County, Florida, Tax Collector (the "Office") as of and for the year ended September 30, 2019, and the related notes to the financial statements, which collectively comprise the Office's financial statements as listed in the table of contents.

Management's Responsibility for the Financial Statements

Management is responsible for the preparation and fair presentation of these financial statements in accordance with accounting principles generally accepted in the United States of America; this includes the design, implementation, and maintenance of internal control relevant to the preparation and fair presentation of financial statements that are free from material misstatement, whether due to fraud or error.

Auditors' Responsibility

Our responsibility is to express opinions on these financial statements based on our audit. We conducted our audit in accordance with auditing standards generally accepted in the United States of America and the standards applicable to financial audits contained in *Government Auditing Standards*, issued by the Comptroller General of the United States. Those standards require that we plan and perform the audit to obtain reasonable assurance about whether the financial statements are free from material misstatement.

An audit involves performing procedures to obtain audit evidence about the amounts and disclosures in the financial statements. The procedures selected depend on the auditors' judgment, including the assessment of the risks of material misstatement of the financial statements, whether due to fraud or error. In making those risk assessments, the auditor considers internal control relevant to the entity's preparation and fair presentation of the financial statements in order to design audit procedures that are appropriate in the circumstances, but not for the purpose of expressing an opinion on the effectiveness of the entity's internal control. Accordingly, we express no such opinion. An audit also includes evaluating the appropriateness of accounting policies used and the reasonableness of significant accounting estimates made by management, as well as evaluating the overall presentation of the financial statements.

We believe that the audit evidence we have obtained is sufficient and appropriate to provide a basis for our audit opinions.

Opinions

In our opinion, the financial statements referred to above present fairly, in all material respects, the respective financial position of the major fund and the aggregate remaining fund information of the Office as of September 30, 2019, and the respective changes in financial position, where applicable, thereof for the year then ended in accordance with accounting principles generally accepted in the United States of America.

Emphasis of Matter

As discussed in Note 1 to the financial statements, the financial statements referred to above were prepared solely for the purpose of complying with the Rules of the Auditor General of the State of Florida. In conformity with the Rules, the accompanying financial statements are intended to present the financial position and changes in financial position, where applicable, of the major fund, and the aggregate remaining fund information, only for that portion of the major fund, and the aggregate remaining fund information, of Sumter County, Florida, that is attributable to the Office. They do not purport to, and do not, present fairly the financial position of Sumter County, Florida, as of September 30, 2019, and the changes in its financial position, where applicable, for the fiscal year then ended in accordance with accounting principles generally accepted in the United States of America. Our opinions are not modified with respect to this matter.

Other Matters

Required Supplementary Information

Accounting principles generally accepted in the United States of America require that the budgetary comparison information, as listed in the table of contents, be presented to supplement the financial statements. Such information, although not a required part of the financial statements, is required by the Governmental Accounting Standards Board, who considers it to be an essential part of financial reporting for placing the financial statements in an appropriate operational, economic, or historical context. We have applied certain limited procedures to the required supplementary information in accordance with auditing standards generally accepted in the United States of America, which consisted of inquiries of management about the methods of preparing the information and comparing the information for consistency with management's responses to our inquiries, the financial statements, and other knowledge we obtained during our audit of the financial statements. We do not express an opinion or provide any assurance on the information because the limited procedures do not provide us with sufficient evidence to express an opinion or provide any assurance.

Other Reporting Required by *Government Auditing Standards*

In accordance with *Government Auditing Standards*, we have also issued our report dated February 20, 2020, on our consideration of the Office's internal control over financial reporting and on our tests of its compliance with certain provisions of laws, regulations, contracts, and grant agreements and other matters. The purpose of that report is solely to describe the scope of our testing of internal control over financial reporting and compliance and the results of that testing, and not to provide an opinion on the effectiveness of the Office's internal control over financial reporting or on compliance. That report is an integral part of an audit performed in accordance with *Government Auditing Standards* in considering the Office's internal control over financial reporting and compliance.

Carr, Riggs & Ingram, L.L.C.

Gainesville, Florida
February 20, 2020

Balance Sheet – Governmental Fund
September 30, 2019

	General Fund
Assets	
Cash and equivalents	$ 226,582
Liabilities and fund balance	
Liabilities:	
Accounts payable and accrued liabilities	$ 53,359
Due to other county agencies	173,223
Total liabilities	226,582
Fund balance	-
Total liabilities and fund balance	$ 226,582

The accompanying "Notes to Financial Statements" form an integral part of this statement.

Statement of Revenues, Expenditures and Changes in Fund Balance
Governmental Fund
Year ended September 30, 2019

	General Fund
Revenues	$ -
Expenditures	
Current:	
General government services	2,164,698
Excess of revenues under expenditures	(2,164,698)
Other financing sources (uses)	
Appropriation from board of county commissioners	2,337,921
Reversion to board of county commissioners	(173,223)
Total other financing sources (uses)	2,164,698
Net change in fund balance	-
Fund balance - beginning of year	-
Fund balance - end of year	$ -

The accompanying "Notes to Financial Statements" form an integral part of this statement.

Statement of Fiduciary Net Position
September 30, 2019

	Agency Fund
Assets	
Cash and equivalents	$ 3,296,677
Receivables	1,739
Total assets	3,298,416
Liabilities	
Assets held for others	2,984,858
Due to other county agencies	313,558
Total liabilities	3,298,416
Net position	$ -

The accompanying "Notes to Financial Statements" form an integral part of this statement.

NOTE 1 – SUMMARY OF SIGNIFICANT ACCOUNTING POLICIES

The accounting policies of the office of the Sumter County, Florida, Tax Collector (the "Office") conform to generally accepted accounting principles as applicable to governments. The following is a summary of the more significant policies.

Reporting Entity

The Tax Collector is an elected constitutional officer, whose office is established by Article VIII of the Constitution of the State of Florida and is governed by various provisions of state law.

The Office is an integral part of Sumter County, which is the primary government for financial reporting purposes.

Basis of Presentation

The Office's financial statements have been prepared solely for the purpose of complying with the Rules of the Auditor General of the State of Florida (the "Rules"). These financial statements are the fund financial statements required by generally accepted accounting principles. However, these fund financial statements do not constitute a complete presentation because, in conformity with the Rules, the Office has not presented reconciliations to the government-wide financial statements, the government-wide financial statements, management's discussion and analysis, or the pension or the other post-employment benefit related required supplementary information. Also, certain notes to the financial statements may supplement rather than duplicate the notes included in the County's countywide financial statements. In conformity with the Rules, the accompanying financial statements are intended to present the financial position and changes in financial position, where applicable, of the major fund, and the aggregate remaining fund information, only for that portion of the major fund, and the aggregate remaining fund information, of Sumter County, Florida, that is attributable to the Office. They do not purport to, and do not, present fairly the financial position of Sumter County, Florida, as of September 30, 2019, and the changes in its financial position, where applicable, for the fiscal year then ended in accordance with accounting principles generally accepted in the United States of America.

Fund Accounting

Accounts are organized on the basis of funds, each of which is considered a separate accounting entity. The operations of each fund are accounted for with a separate set of self-balancing accounts that comprise its assets, liabilities, fund equity, revenues, and expenditures. Government resources are allocated to, and accounted for in, individual funds based upon the purposes for which they are to be spent and the means by which spending activities are controlled. The focus of fund financial statements is on major funds, each displayed in a separate column. All nonmajor funds are aggregated and displayed in a single column. The Office does not report any nonmajor governmental funds.

The Office reports the following major governmental fund:

> *General Fund* – The General Fund is the primary operating fund. It is used to account for and report all financial resources not accounted for and reported in another fund.

The Office also reports the following fiduciary fund:

> *Agency Fund* – The Agency Fund is used to account for assets held in a custodial capacity.

NOTE 1 – SUMMARY OF SIGNIFICANT ACCOUNTING POLICIES (CONTINUED)

Fund Balance

The Office follows the provisions of GASB Statement No. 54, *Fund Balance Reporting and Governmental Fund Type Definitions* to classify fund balances for governmental funds into specifically defined classifications. The classifications comprise a hierarchy based primarily on the extent to which the Office is bound to honor constraints on the specific purposes for which amounts in the funds can be spent.

The fund balance classifications specified in GASB Statement No. 54 are as follows:

Nonspendable Fund Balance – Nonspendable fund balances are amounts that cannot be spent because they are either (a) not in spendable form or (b) legally or contractually required to be maintained intact.

Restricted Fund Balance – Restricted fund balances are restricted when constraints placed on the use of resources are either: (a) externally imposed by creditors, grantors, contributors, or laws or regulations of other governments; or (b) imposed by law through constitutional provisions or enabling legislation.

Committed Fund Balance – Committed fund balances are amounts that can only be used for specific purposes as a result of constraints imposed by formal action of the Office's highest level of decision-making authority, which is a policy of the Office. Committed amounts cannot be used for any other purpose unless the Office removes those constraints by taking the same type of action.

Assigned Fund Balance – Assigned fund balances are amounts that are constrained by the Office's intent to be used for specific purposes, but are neither restricted nor committed. Intent is expressed by (a) the constitutional officer or (b) a body or official to which the constitutional officer has delegated the authority to assign amounts to be used for specific purposes.

Unassigned Fund Balance – Unassigned fund balance is the residual classification for the General Fund.

The Office's policy is to expend resources in the following order: restricted, committed, assigned, and unassigned.

Measurement Focus/Basis of Accounting

All governmental funds are accounted for on a current financial resources measurement focus. This means that only current assets and current liabilities are generally included on their balance sheets. Their reported fund balance (net current assets) is considered a measure of "available spendable resources." Their operating statements present increases (revenues and other financing sources) and decreases (expenditures and other financing uses) in net current assets and, accordingly, are said to present a summary of sources and uses of "available spendable resources" during a period.

NOTE 1 – SUMMARY OF SIGNIFICANT ACCOUNTING POLICIES (CONTINUED)

Basis of accounting refers to when revenues and expenditures are recognized in the accounts and reported in the financial statements. Basis of accounting relates to the timing of the measurements made, regardless of the measurement focus applied.

All governmental funds are accounted for using the modified accrual basis of accounting. Their revenues are recognized when they become measurable and available as net current assets. Expenditures are generally recognized under the modified accrual basis of accounting when the related fund liability is incurred. However, principal and interest on long-term debt are recognized when due.

Agency fund assets and liabilities are accounted for on the accrual basis of accounting.

Capital Assets and Long-Term Liabilities

Capital assets used by the Office are recorded and accounted for by the Sumter County, Florida, Board of County Commissioners.

Because of their spending measurement focus, expenditure recognition for governmental fund types is limited to exclude amounts represented by noncurrent liabilities. Since they do not affect net current assets, such long-term amounts are not recognized as governmental fund type expenditures or fund liabilities. They are instead reported as liabilities in the financial statements of the County.

Cash and Equivalents

All cash and equivalents are placed in a bank that qualifies as a public depository pursuant to the provisions of the Florida Security for Public Deposits Act. Every qualified public depository is required by this law to deposit with the Chief Financial Officer eligible collateral equal to, or in excess of, an amount to be determined by the Chief Financial Officer. The Chief Financial Officer is required to ensure that all funds are entirely collateralized throughout the fiscal year.

Use of Estimates

The preparation of financial statements in conformity with generally accepted accounting principles requires management to make various estimates. Actual results could differ from those estimates.

NOTE 2 – RISK MANAGEMENT

For health insurance, the Office participates in the risk management program established by the Board of County Commissioners to cover claims against the Board and Constitutional Officers. The risk management program is accounted for in the Board's financial statements as an Internal Service Fund, in accordance with requirements of GASB Statement 10.

For risks of loss related to workers' compensation, general liability and errors or omissions, the Office participates with the Board of County Commissioners to purchase commercial insurance. For the past three years, there have been no insurance settlements in excess of insurance coverages.

Required Supplementary Information

Schedule of Revenues, Expenditures and Changes in Fund Balances
Budget and Actual – General Fund
Year ended September 30, 2019

	Budgeted Amounts			Variance With Final
	Original	Final	Actual	Budget
Revenues	$ -	$ -	$ -	$ -
Expenditures				
Current:				
General government services	2,337,921	2,337,921	2,164,698	173,223
Excess of revenues over (under) expenditures	(2,337,921)	(2,337,921)	(2,164,698)	173,223
Other financing sources (uses)				
Appropriation from board of county commissioners	2,337,921	2,337,921	2,337,921	-
Reversion to board of county commissioners	-	-	(173,223)	(173,223)
Total other financing sources (uses)	2,337,921	2,337,921	2,164,698	(173,223)
Net change in fund balances	-	-	-	-
Fund balances - beginning of year	-	-	-	-
Fund balances - end of year	$ -	$ -	$ -	$ -

Notes to Schedule:

The budget is prepared on a basis that does not differ materially from generally accepted accounting principles. Its preparation, adoption, and amendment is governed by Florida Statutes. The fund is the legal level of control.

Additional Elements Required by the Rules of the Auditor General

CRI CARR RIGGS & INGRAM
CPAs and Advisors

Carr, Riggs & Ingram, LLC
4010 N.W. 25th Place
Gainesville, Florida 32606
P.O. Box 13494
Gainesville, Florida 32604

(352) 372-6300
(352) 375-1583 (fax)
www.cricpa.com

MANAGEMENT LETTER

The Honorable Randy Mask
Tax Collector
Sumter County, Florida

Report on the Financial Statements

We have audited the financial statements of the office of the Sumter County, Florida, Tax Collector, Florida, (the "Office"), as of and for the year ended September 30, 2019, and have issued our report thereon dated February 20, 2020.

Auditors' Responsibility

We conducted our audit in accordance with auditing standards generally accepted in the United States of America, the standards applicable to financial audits contained in *Government Auditing Standards*, issued by the Comptroller General of the United States, and Chapter 10.550, Rules of the Auditor General.

Other Reporting Requirements

We have issued our Independent Auditors' Report on Internal Control over Financial Reporting and on Compliance and Other Matters Based on an Audit of the Financial Statements performed in accordance with *Government Auditing Standards*, and Independent Accountants' Report on an examination conducted in accordance with *AICPA Professional Standards*, AT-C Section 315, regarding compliance requirements in accordance with Chapter 10.550, Rules of the Auditor General. Disclosures in these reports and schedule, which are dated February 20, 2020, should be considered in conjunction with this management letter.

Prior Audit Findings

Section 10.554(1)(i)1., Rules of the Auditor General, require that we determine whether or not corrective actions have been taken to address findings and recommendations made in the preceding audit. The Office has no uncorrected prior audit findings that are required to be identified pursuant to the Rules of the Auditor General.

Financial Management

Section 10.554(1)(i)2., Rules of the Auditor General, requires that we communicate any recommendations to improve financial management. In connection with our audit, we did not have any such recommendations.

Additional Matters

Section 10.554(1)(i)3., Rules of the Auditor General, requires us to communicate noncompliance with provisions of contract or grant agreements, or abuse, that have occurred, or are likely to have occurred, that have an effect on the financial statements that is less than material but which warrants the attention of those charged with governance. In connection with our audit, we did not note any such findings.

Purpose of this Letter

Our management letter is intended solely for the information and use of the Legislative Auditing Committee, members of the Florida Senate and Florida House of Representatives, the Florida Auditor General, the Sumter County, Florida, Tax Collector, and applicable management, and is not intended to be and should not be used by anyone other than those specified parties.

Carr, Riggs & Ingram, L.L.C.

Gainesville, Florida
February 20, 2020

CRI CARR RIGGS & INGRAM
CPAs and Advisors

Carr, Riggs & Ingram, LLC
4010 N.W. 25th Place
Gainesville, Florida 32606
P.O. Box 13494
Gainesville, Florida 32604

(352) 372-6300
(352) 375-1583 (fax)
www.cricpa.com

INDEPENDENT AUDITORS' REPORT ON INTERNAL CONTROL OVER FINANCIAL REPORTING AND ON COMPLIANCE AND OTHER MATTERS BASED ON AN AUDIT OF FINANCIAL STATEMENTS PERFORMED IN ACCORDANCE WITH *GOVERNMENT AUDITING STANDARDS*

The Honorable Randy Mask
Tax Collector
Sumter County, Florida

We have audited, in accordance with the auditing standards generally accepted in the United States of America and the standards applicable to financial audits contained in *Government Auditing Standards* issued by the Comptroller General of the United States, the financial statements of the major fund and the aggregate remaining fund information of the office of the Sumter County, Florida, Tax Collector (the "Office"), as of and for the year ended September 30, 2019, and the related notes to the financial statements, which collectively comprise the Office's financial statements, and have issued our report thereon dated February 20, 2020.

Internal Control Over Financial Reporting

In planning and performing our audit of the financial statements, we considered the Office's internal control over financial reporting (internal control) to determine the audit procedures that are appropriate in the circumstances for the purpose of expressing our opinions on the financial statements, but not for the purpose of expressing an opinion on the effectiveness of the Office's internal control. Accordingly, we do not express an opinion on the effectiveness of the Office's internal control.

A *deficiency in internal control* exists when the design or operation of a control does not allow management or employees, in the normal course of performing their assigned functions, to prevent, or detect and correct, misstatements on a timely basis. A *material weakness* is a deficiency, or a combination of deficiencies, in internal control, such that there is a reasonable possibility that a material misstatement of the entity's financial statements will not be prevented, or detected and corrected on a timely basis. A *significant deficiency* is a deficiency, or a combination of deficiencies, in internal control that is less severe than a material weakness, yet important enough to merit attention by those charged with governance.

Our consideration of internal control was for the limited purpose described in the first paragraph of this section and was not designed to identify all deficiencies in internal control that might be material weaknesses or significant deficiencies. Given these limitations, during our audit we did not identify any deficiencies in internal control that we consider to be material weaknesses. However, material weaknesses may exist that have not been identified.

Compliance and Other Matters

As part of obtaining reasonable assurance about whether the Office's financial statements are free from material misstatement, we performed tests of its compliance with certain provisions of laws, regulations, contracts, and grant agreements, noncompliance with which could have a direct and material effect on the determination of financial statement amounts. However, providing an opinion on compliance with those provisions was not an objective of our audit, and accordingly, we do not express such an opinion. The results of our tests disclosed no instances of noncompliance or other matters that are required to be reported under *Government Auditing Standards*.

Purpose of this Report

The purpose of this report is solely to describe the scope of our testing of internal control and compliance and the results of that testing, and not to provide an opinion on the effectiveness of the entity's internal control or on compliance. This report is an integral part of an audit performed in accordance with *Government Auditing Standards* in considering the entity's internal control and compliance. Accordingly, this communication is not suitable for any other purpose.

Carr, Riggs & Ingram, L.L.C.

Gainesville, Florida
February 20, 2020

CRI CARR RIGGS & INGRAM
CPAs and Advisors

Carr, Riggs & Ingram, LLC
4010 N.W. 25th Place
Gainesville, Florida 32606
P.O. Box 13494
Gainesville, Florida 32604

(352) 372-6300
(352) 375-1583 (fax)
www.cricpa.com

INDEPENDENT ACCOUNTANTS' REPORT ON COMPLIANCE WITH SECTION 218.415, FLORIDA STATUTES

The Honorable Randy Mask
Tax Collector
Sumter County, Florida

We have examined the office of the Sumter County, Florida, Tax Collector's (the "Office") compliance with the requirements of Section 218.415, Florida Statutes, *Local Government Investment Policies*, during the year ended September 30, 2019. Management is responsible for the Office's compliance with the specified requirements. Our responsibility is to express an opinion on the Office's compliance with the specified requirements based on our examination.

Our examination was conducted in accordance with attestation standards established by the American Institute of Certified Public Accountants. Those standards require that we plan and perform the examination to obtain reasonable assurance about whether the Office complied, in all material respects, with the specified requirements referenced above. An examination involves performing procedures to obtain evidence about whether the Office complied with the specified requirements. The nature, timing, and extent of the procedures selected depend on our judgment, including an assessment of the risks of material noncompliance, whether due to fraud or error. We believe that the evidence we obtained is sufficient and appropriate to provide a reasonable basis for our opinion.

Our examination does not provide a legal determination on the Office's compliance with specified requirements.

In our opinion, the Office complied, in all material respects, with the requirements of Section 218.415, Florida Statutes, *Local Government Investment Policies*, for the year ended September 30, 2019.

This report is intended solely for the information and use of management and the State of Florida Auditor General and is not intended to be and should not be used by anyone other than these specified parties.

Carr, Riggs & Ingram, L.L.C.

Gainesville, Florida
February 20, 2020

RANDY MASK
Sumter County Tax Collector

www.sumtertaxcollector.com

February 20, 2020

Sherrill F. Norman, CPA
State of Florida Auditor General
Claude Pepper Building
111 West Madison Street
Tallahassee FL 32399-1450

Dear Honorable Sherrill Norman,

I have been presented with the audit report for the Sumter County Tax Collector for the fiscal year ending September 30, 2019. I am pleased to note that there were no adverse comments which require corrective action.

Thank You,

Randy Mask
Sumter County Tax Collector

Wildwood Office
7375 Powell Road, Suite 135
Wildwood, FL 34785
Office: (352) 689-4540
Fax: (352) 689-4541

Bushnell Office
220 E. McCollum Avenue
Bushnell, FL 33513
Office: (352) 569-6740
Fax: (352) 569-6741

The Villages Office
8033 E C-466, Suite B
The Villages, FL 32162
Office: (352) 689-4645
Fax: (352) 689-4646

Sumter County
Property Appraiser

Audit Report

September 30, 2019

CRI CARR RIGGS & INGRAM
CPAs and Advisors
CRIcpa.com

Table of Contents
September 30, 2019

REPORT
Independent Auditors' Report 1

FINANCIAL STATEMENTS
Governmental Funds:

Balance Sheet 3

Statement of Revenues, Expenditures and Changes in Fund Balance 4

Notes to Financial Statements 5

REQUIRED SUPPLEMENTARY INFORMATION
Schedule of Revenues, Expenditures and Changes in Fund Balances – Budget and Actual – General Fund 8

ADDITIONAL ELEMENTS REQUIRED BY THE RULES OF THE AUDITOR GENERAL
Management Letter 9

Independent Auditors' Report on Internal Control Over Financial Reporting and on Compliance and Other Matters Based on an Audit of Financial Statements Performed in Accordance with *Government Auditing Standards* 11

Independent Accountants' Report on Compliance with Section 218.415, Florida Statutes 13

Elected Official's Response --

CRI CARR RIGGS & INGRAM
CPAs and Advisors

Carr, Riggs & Ingram, LLC
4010 N.W. 25th Place
Gainesville, Florida 32606
P.O. Box 13494
Gainesville, Florida 32604

(352) 372-6300
(352) 375-1583 (fax)
www.cricpa.com

INDEPENDENT AUDITORS' REPORT

The Honorable Joey Hooten
Property Appraiser
Sumter County, Florida

Report on the Financial Statements

We have audited the accompanying financial statements of the major fund of the Sumter County, Florida Property Appraiser (the "Office") as of and for the year ended September 30, 2019, and the related notes to the financial statements, which collectively comprise the Office's financial statements as listed in the table of contents.

Management's Responsibility for the Financial Statements

Management is responsible for the preparation and fair presentation of these financial statements in accordance with accounting principles generally accepted in the United States of America; this includes the design, implementation, and maintenance of internal control relevant to the preparation and fair presentation of financial statements that are free from material misstatement, whether due to fraud or error.

Auditors' Responsibility

Our responsibility is to express an opinion on these financial statements based on our audit. We conducted our audit in accordance with auditing standards generally accepted in the United States of America and the standards applicable to financial audits contained in *Government Auditing Standards*, issued by the Comptroller General of the United States. Those standards require that we plan and perform the audit to obtain reasonable assurance about whether the financial statements are free from material misstatement.

An audit involves performing procedures to obtain audit evidence about the amounts and disclosures in the financial statements. The procedures selected depend on the auditors' judgment, including the assessment of the risks of material misstatement of the financial statements, whether due to fraud or error. In making those risk assessments, the auditor considers internal control relevant to the entity's preparation and fair presentation of the financial statements in order to design audit procedures that are appropriate in the circumstances, but not for the purpose of expressing an opinion on the effectiveness of the entity's internal control. Accordingly, we express no such opinion. An audit also includes evaluating the appropriateness of accounting policies used and the reasonableness of significant accounting estimates made by management, as well as evaluating the overall presentation of the financial statements.

We believe that the audit evidence we have obtained is sufficient and appropriate to provide a basis for our audit opinion.

Opinion

In our opinion, the financial statements referred to above present fairly, in all material respects, the financial position of the major fund of the Office as of September 30, 2019, and the changes in its financial position for the year then ended in accordance with accounting principles generally accepted in the United States of America.

Emphasis of Matter

As discussed in Note 1 to the financial statements, the financial statements referred to above were prepared solely for the purpose of complying with the Rules of the Auditor General of the State of Florida. In conformity with the Rules, the accompanying financial statements are intended to present the financial position and changes in financial position of the major fund, and only for that portion of the major fund of Sumter County, Florida, that is attributable to the Office. They do not purport to, and do not, present fairly the financial position of Sumter County, Florida, as of September 30, 2019, and the changes in its financial position for the fiscal year then ended in accordance with accounting principles generally accepted in the United States of America. Our opinion is not modified with respect to these matters.

Other Matters

Required Supplementary Information

Accounting principles generally accepted in the United States of America require that the budgetary comparison information, as listed in the table of contents, be presented to supplement the financial statements. Such information, although not a required part of the financial statements, is required by the Governmental Accounting Standards Board, who considers it to be an essential part of basic financial reporting for placing the financial statements in an appropriate operational, economic, or historical context. We have applied certain limited procedures to the required supplementary information in accordance with auditing standards generally accepted in the United States of America, which consisted of inquiries of management about the methods of preparing the information and comparing the information for consistency with management's responses to our inquiries, the financial statements, and other knowledge we obtained during our audit of the financial statements. We do not express an opinion or provide any assurance on the information because the limited procedures do not provide us with sufficient evidence to express an opinion or provide any assurance.

Other Reporting Required by *Government Auditing Standards*

In accordance with *Government Auditing Standards*, we have also issued our report dated January 9, 2020, on our consideration of the Office's internal control over financial reporting and on our tests of its compliance with certain provisions of laws, regulations, contracts, and grant agreements and other matters. The purpose of that report is solely to describe the scope of our testing of internal control over financial reporting and compliance and the results of that testing, and not to provide an opinion on the effectiveness of the Office's internal control over financial reporting or on compliance. That report is an integral part of an audit performed in accordance with *Government Auditing Standards* in considering the Office's internal control over financial reporting and compliance.

Carr, Riggs & Ingram, L.L.C.

Gainesville, Florida
January 9, 2020

Balance Sheet – Governmental Funds
September 30, 2019

		General Fund
Assets		
Cash and equivalents	$	152,478
Due from other governments		43
Total assets	$	152,521
Liabilities and fund balance		
Liabilities:		
Accounts payable and accrued liabilities	$	68,979
Due to other county agencies		83,542
Total liabilities		152,521
Fund balance		-
Total liabilities and fund balance	$	152,521

See accompanying Notes.

Statement of Revenues, Expenditures and Changes in Fund Balance
Governmental Funds
Year ended September 30, 2019

	General Fund
Revenue	
Charges for services	$ 39,176
Expenditures	
Current:	
General government services	1,508,274
Excess of revenues under expenditures	(1,469,098)
Other financing sources (uses)	
Appropriation from board of county commissioners	1,552,640
Reversion to board of county commissioners	(83,542)
Total other financing sources (uses)	1,469,098
Net change in fund balance	-
Fund balance - beginning of year	-
Fund balance - end of year	$ -

See accompanying Notes .

NOTE 1 – SUMMARY OF SIGNIFICANT ACCOUNTING POLICIES

The accounting policies of the office of the Sumter County, Florida, Property Appraiser (the "Office") conform to generally accepted accounting principles as applicable governments. The following is a summary of the more significant policies.

Reporting Entity

The Property Appraiser is an elected constitutional officer, whose office is established by Article VIII of the Constitution of the State of Florida and is governed by various provisions of state law.

The Office is an integral part of Sumter County, Florida, which is the primary government for financial reporting purposes.

Basis of Presentation

The Office's financial statements have been prepared solely for the purpose of complying with the Rules of the Auditor General of the State of Florida (the "Rules"). These financial statements are the fund financial statements required by generally accepted accounting principles. However, these fund statements do not constitute a complete presentation because, in conformity with the Rules, the Office has not presented reconciliations to the government-wide financial statements, the government-wide financial statements, management's discussion and analysis, or the pension or the other post-employment benefit related required supplementary information. Also, certain notes to the financial statements may supplement rather than duplicate the notes included in the County's countywide financial statements.

In conformity with the Rules, the accompanying financial statements are intended to present the financial position and changes in financial position, where applicable, of the major fund, only for that portion of the major fund of Sumter County, Florida, that is attributable to the Office. They do not purport to, and do not, present fairly the financial position of Sumter County, Florida, as of September 30, 2018, and the changes in its financial position, where applicable, for the fiscal year then ended in accordance with accounting principles generally accepted in the United States of America.

Fund Accounting

Accounts are organized on the basis of funds, each of which is considered a separate accounting entity. The operations of each fund are accounted for with a separate set of self-balancing accounts that comprise its assets, liabilities, fund equity, revenues, and expenditures. Government resources are allocated to, and accounted for in, individual funds based upon the purposes for which they are to be spent and the means by which spending activities are controlled. The focus of fund financial statements is on major funds, each displayed in a separate column. All nonmajor funds are aggregated and displayed in a single column. The Office does not report any nonmajor funds.

The Office reports the following major governmental fund:

> General Fund – The General Fund is the primary operating fund. It is used to account for and report all financial resources not accounted for and reported in another fund.

NOTE 1 – SUMMARY OF SIGNIFICANT ACCOUNTING POLICIES (CONTINUED)

Fund Balance

The Office follows the provisions of GASB Statement No. 54, *Fund Balance Reporting and Governmental Fund Type Definitions* to classify fund balances for governmental funds into specifically defined classifications. The classifications comprise a hierarchy based primarily on the extent to which the Office is bound to honor constraints on the specific purposes for which amounts in the funds can be spent.

The fund balance classifications specified in GASB Statement No. 54 are as follows:

Nonspendable Fund Balance – Nonspendable fund balances are amounts that cannot be spent because they are either (a) not in spendable form or (b) legally or contractually required to be maintained intact.

Restricted Fund Balance – Restricted fund balances are restricted when constraints placed on the use of resources are either: (a) externally imposed by creditors, grantors, contributors, or laws or regulations of other governments; or (b) imposed by law through constitutional provisions or enabling legislation.

Committed Fund Balance – Committed fund balances are amounts that can only be used for specific purposes as a result of constraints imposed by formal action of the Office's highest level of decision-making authority, which is a policy of the Office. Committed amounts cannot be used for any other purpose unless the Office removes those constraints by taking the same type of action.

Assigned Fund Balance – Assigned fund balances are amounts that are constrained by the Office's intent to be used for specific purposes, but are neither restricted nor committed. Intent is expressed by (a) the constitutional officer or (b) a body or official to which the constitutional officer has delegated the authority to assign amounts to be used for specific purposes.

Unassigned Fund Balance – Unassigned fund balance is the residual classification for the General Fund.

The Office's policy is to expend resources in the following order: restricted, committed, assigned, and unassigned.

Measurement Focus/Basis of Accounting

All governmental funds are accounted for on a current financial resources measurement focus. This means that only current assets and current liabilities are generally included on their balance sheets. Their reported fund balance (net current assets) is considered a measure of "available spendable resources." Their operating statements present increases (revenues and other financing sources) and decreases (expenditures and other financing uses) in net current assets and, accordingly, are said to present a summary of sources and uses of "available spendable resources" during a period.

Basis of accounting refers to when revenues and expenditures are recognized in the accounts and reported in the financial statements. Basis of accounting relates to the timing of the measurements made, regardless of the measurement focus applied.

NOTE 1 – SUMMARY OF SIGNIFICANT ACCOUNTING POLICIES (CONTINUED)

All governmental funds are accounted for using the modified accrual basis of accounting. Their revenues are recognized when they become measurable and available as net current assets. Revenues are considered available when they are collected within sixty days of the fiscal year end. Expenditures are generally recognized under the modified accrual basis of accounting when the related fund liability is incurred. However, principal and interest on long-term debt are recognized when due.

Capital Assets and Long-Term Liabilities

Capital assets used by the Office are recorded and accounted for by the Sumter County Board of County Commissioners.

Because of their spending measurement focus, expenditure recognition for governmental fund types is limited to exclude amounts represented by noncurrent liabilities. Since they do not affect net current assets, such long-term amounts are not recognized as governmental fund type expenditures or fund liabilities. They are instead reported as liabilities in the financial statements of the County.

Cash and Equivalents

All cash and equivalents are placed in a bank that qualifies as a public depository pursuant to the provisions of the Florida Security for Public Deposits Act. Every qualified public depository is required by this law to deposit with the Chief Financial Officer eligible collateral equal to, or in excess of, an amount to be determined by the Chief Financial Officer. The Chief Financial Officer is required to ensure that all funds are entirely insured or collateralized throughout the fiscal year.

Use of Estimates

The preparation of financial statements in conformity with generally accepted accounting principles requires management to make various estimates. Actual results could differ from those estimates.

NOTE 2 – RISK MANAGEMENT

For health insurance, the Office participates in the risk management program established by the Board of County Commissioners to cover claims against the Board and Constitutional Officers. The risk management program is accounted for in the Board's financial statements as an Internal Service Fund, in accordance with requirements of GASB Statement 10.

For risks of loss related to workers' compensation, general liability and errors or omissions, the Office participates with the Board of County Commissioners to purchase commercial insurance. For the past three years, there have been no insurance settlements in excess of insurance coverages.

Required Supplementary Information

Schedule of Revenues, Expenditures and Changes in Fund Balances
Budget and Actual – General Fund
Year ended September 30, 2019

	Budgeted Amounts			Variance
	Original	Final	Actual	With Final Budget
Revenues				
Charges for services	$ 38,432	$ 38,432	$ 39,176	$ 744
Expenditures				
Current:				
General government services	1,591,072	1,591,072	1,508,274	82,798
Excess of revenues over (under) expenditures	(1,552,640)	(1,552,640)	(1,469,098)	83,542
Other financing sources (uses)				
Appropriation from board of county commissioners	1,552,640	1,552,640	1,552,640	-
Reversion to board of county commissioners	-	-	(83,542)	(83,542)
Total other financing sources (uses)	1,552,640	1,552,640	1,469,098	(83,542)
Net change in fund balances	-	-	-	-
Fund balances - beginning of year	-	-	-	-
Fund balances - end of year	$ -	$ -	$ -	$ -

Notes to Schedule:

The budget is prepared on a basis that does not differ materially from generally accepted accounting principles. Its preparation, adoption, and amendment is governed by Florida Statutes. The fund is the legal level of control.

Additional Elements Required by the Rules of the Auditor General

CRI CARR RIGGS & INGRAM
CPAs and Advisors

Carr, Riggs & Ingram, LLC
4010 N.W. 25th Place
Gainesville, Florida 32606
P.O. Box 13494
Gainesville, Florida 32604

(352) 372-6300
(352) 375-1583 (fax)
www.cricpa.com

MANAGEMENT LETTER

The Honorable Joey Hooten
Property Appraiser
Sumter County, Florida

Report on the Financial Statements

We have audited the financial statements of the Sumter County Property Appraiser, Florida, (the "Office"), as of and for the year ended September 30, 2019, and have issued our report thereon dated January 9, 2020.

Auditor's Responsibility

We conducted our audit in accordance with auditing standards generally accepted in the United States of America; the standards applicable to financial audits contained in *Government Auditing Standards*, issued by the Comptroller General of the United States; and Chapter 10.550, Rules of the Auditor General.

Other Reporting Requirements

We have issued our Independent Auditor's Report on Internal Control over Financial Reporting and on Compliance and Other Matters Based on an Audit of the Financial Statements Performed in Accordance with *Government Auditing Standards;* and Independent Accountant's Report on an examination conducted in accordance with *AICPA Professional Standards*, AT-C Section 315, regarding compliance requirements in accordance with Chapter 10.550, Rules of the Auditor General. Disclosures in those reports and schedule, which are dated January 9, 2020, should be considered in conjunction with this management letter.

Prior Audit Findings

Section 10.554(1)(i)1., Rules of the Auditor General, requires that we determine whether or not corrective actions have been taken to address findings and recommendations made in the preceding annual financial audit report. Corrective actions have been taken to address findings and recommendations made in the preceding annual financial audit report.

Financial Management

Section 10.554(1)(i)2., Rules of the Auditor General, requires that we communicate any recommendations to improve financial management. In connection with our audit, we did not have any such recommendations.

Additional Matters

Section 10.554(1)(i)3., Rules of the Auditor General, requires us to communicate noncompliance with provisions of contracts or grant agreements, or abuse, that have occurred, or are likely to have occurred, that have an effect on the financial statements that is less than material but which warrants the attention of those charged with governance. In connection with our audit, we did not note any such findings.

Purpose of this Letter

Our management letter is intended solely for the information and use of the Legislative Auditing Committee, members of the Florida Senate and the Florida House of Representatives, the Florida Auditor General, Federal and other granting agencies, the Sumter County Property Appraiser, and applicable management, and is not intended to be and should not be used by anyone other than these specified parties.

Carr, Riggs & Ingram, L.L.C.

Gainesville, Florida
January 9, 2020

CRI CARR RIGGS & INGRAM
CPAs and Advisors

Carr, Riggs & Ingram, LLC
4010 N.W. 25th Place
Gainesville, Florida 32606
P.O. Box 13494
Gainesville, Florida 32604

(352) 372-6300
(352) 375-1583 (fax)
www.cricpa.com

INDEPENDENT AUDITORS' REPORT ON INTERNAL CONTROL OVER FINANCIAL REPORTING AND ON COMPLIANCE AND OTHER MATTERS BASED ON AN AUDIT OF FINANCIAL STATEMENTS PERFORMED IN ACCORDANCE WITH *GOVERNMENT AUDITING STANDARDS*

The Honorable Joey Hooten
Property Appraiser
Sumter County, Florida

We have audited, in accordance with the auditing standards generally accepted in the United States of America and the standards applicable to financial audits contained in *Government Auditing Standards* issued by the Comptroller General of the United States, the financial statements of the office of the Sumter County Property Appraiser (the "Office"), as of and for the year ended September 30, 2019, and the related notes to the financial statements, which collectively comprise the Office's financial statements, and have issued our report thereon dated January 9, 2020.

Internal Control Over Financial Reporting

In planning and performing our audit of the financial statements, we considered the Office's internal control over financial reporting (internal control) to determine the audit procedures that are appropriate in the circumstances for the purpose of expressing our opinion on the financial statements, but not for the purpose of expressing an opinion on the effectiveness of the Office's internal control. Accordingly, we do not express an opinion on the effectiveness of the Office's internal control.

A *deficiency in internal control* exists when the design or operation of a control does not allow management or employees, in the normal course of performing their assigned functions, to prevent, or detect and correct, misstatements on a timely basis. A *material weakness* is a deficiency, or a combination of deficiencies, in internal control, such that there is a reasonable possibility that a material misstatement of the entity's financial statements will not be prevented, or detected and corrected on a timely basis. A *significant deficiency* is a deficiency, or a combination of deficiencies, in internal control that is less severe than a material weakness, yet important enough to merit attention by those charged with governance.

Our consideration of internal control was for the limited purpose described in the first paragraph of this section and was not designed to identify all deficiencies in internal control that might be material weaknesses or significant deficiencies. Given these limitations, during our audit we did not identify any deficiencies in internal control that we consider to be material weaknesses. However, material weaknesses may exist that have not been identified.

Compliance and Other Matters

As part of obtaining reasonable assurance about whether the Office's financial statements are free from material misstatement, we performed tests of its compliance with certain provisions of laws, regulations, contracts, and grant agreements, noncompliance with which could have a direct and material effect on the determination of financial statement amounts. However, providing an opinion on compliance with those provisions was not an objective of our audit, and accordingly, we do not express such an opinion. The results of our tests disclosed no instances of noncompliance or other matters that are required to be reported under *Government Auditing Standards*.

Purpose of this Report

The purpose of this report is solely to describe the scope of our testing of internal control and compliance and the results of that testing, and not to provide an opinion on the effectiveness of the Office's internal control or on compliance. This report is an integral part of an audit performed in accordance with *Government Auditing Standards* in considering the entity's internal control and compliance. Accordingly, this communication is not suitable for any other purpose.

Carr, Riggs & Ingram, L.L.C.

Gainesville, Florida
January 9, 2020

CRI CARR RIGGS & INGRAM
CPAs and Advisors

Carr, Riggs & Ingram, LLC
4010 N.W. 25th Place
Gainesville, Florida 32606
P.O. Box 13494
Gainesville, Florida 32604

(352) 372-6300
(352) 375-1583 (fax)
www.cricpa.com

INDEPENDENT ACCOUNTANTS' REPORT ON COMPLIANCE WITH SECTION 218.415, FLORIDA STATUTES

To The Honorable Joey Hooten
Property Appraiser
Sumter County, Florida

We have examined the office of the Sumter County Property Appraiser's (the "Office") compliance with the requirements of Section 218.415, Florida Statutes, *Local Government Investment Policies*, during the year ended September 30, 2019. Management is responsible for the Office's compliance with the specified requirements. Our responsibility is to express an opinion on the Office's compliance with the specified requirements based on our examination.

Our examination was conducted in accordance with attestation standards established by the American Institute of Certified Public Accountants. Those standards require that we plan and perform the examination to obtain reasonable assurance about whether the Office complied, in all material respects, with the specified requirements referenced above. An examination involves performing procedures to obtain evidence about whether the Office complied with the specified requirements. The nature, timing, and extent of the procedures selected depend on our judgement, including an assessment of the risks of material noncompliance, whether due to fraud or error. We believe that the evidence we obtained is sufficient and appropriate to provide a reasonable basis for our opinion.

Our examination does not provide a legal determination on the Office's compliance with specified requirements.

In our opinion, the Office complied, in all material respects, with the aforementioned requirements for the year ended September 30, 2019.

This report is intended solely for the information and use of management and the State of Florida Auditor General and is not intended to be and should not be used by anyone other than these specified parties.

Carr, Riggs & Ingram, L.L.C.

Gainesville, Florida
January 9, 2020

JOEY HOOTEN

SUMTER COUNTY
PROPERTY APPRAISER

January 9, 2020

Ms. Sherrill F. Norman, CPA
Auditor General
State of Florida
Post Office Box 1735
Tallahassee, FL 32302

Dear Ms. Norman:

I have been presented with the audit report for the Sumter County Property Appraiser's Office for the fiscal year ending September 30, 2019. I am pleased to note there are no audit findings that require corrective action.

Sincerely,

The Honorable Joey Hooten
Sumter County Property Appraiser
JH/cy

WWW.SUMTERPA.COM
218 E. McCollum Ave. Bushnell, FL 33513
Phone (352) 569 6800 • Fax: (352) 569 6780

Sumter County, Florida
Supervisor of Elections

Audit Report

September 30, 2019

CRI CARR RIGGS & INGRAM
CPAs and Advisors
CRIcpa.com

Table of Contents
September 30, 2019

REPORT
Independent Auditors' Report 1

FINANCIAL STATEMENTS
Governmental Funds:

Balance Sheet 3

Statement of Revenues, Expenditures and Changes in Fund Balance 4

Notes to Financial Statements 5

REQUIRED SUPPLEMENTARY INFORMATION
Schedule of Revenues, Expenditures and Changes in Fund Balances – Budget and Actual – General Fund 8

ADDITIONAL ELEMENTS REQUIRED BY THE RULES OF THE AUDITOR GENERAL
Management Letter 9

Independent Auditors' Report on Internal Control Over Financial Reporting and on Compliance and Other Matters Based on an Audit of Financial Statements Performed in Accordance with *Government Auditing Standards* 11

Independent Accountants' Report on Compliance with Section 218.415, Florida Statutes 13

Elected Official's Response to Auditors' Comments --

CRI CARR RIGGS & INGRAM
CPAs and Advisors

Carr, Riggs & Ingram, LLC
4010 N.W. 25th Place
Gainesville, Florida 32606
P.O. Box 13494
Gainesville, Florida 32604

(352) 372-6300
(352) 375-1583 (fax)
www.cricpa.com

The Honorable William Keen
Supervisor of Elections
Sumter County, Florida

Report on the Financial Statements

We have audited the accompanying financial statements of the major fund of the Sumter County, Florida Supervisor of Elections (the "Office") as of and for the year ended September 30, 2019, and the related notes to the financial statements, which collectively comprise the Office's financial statements as listed in the table of contents.

Management's Responsibility for the Financial Statements

Management is responsible for the preparation and fair presentation of these financial statements in accordance with accounting principles generally accepted in the United States of America; this includes the design, implementation, and maintenance of internal control relevant to the preparation and fair presentation of financial statements that are free from material misstatement, whether due to fraud or error.

Auditors' Responsibility

Our responsibility is to express an opinion on these financial statements based on our audit. We conducted our audit in accordance with auditing standards generally accepted in the United States of America and the standards applicable to financial audits contained in *Government Auditing Standards*, issued by the Comptroller General of the United States. Those standards require that we plan and perform the audit to obtain reasonable assurance about whether the financial statements are free from material misstatement.

An audit involves performing procedures to obtain audit evidence about the amounts and disclosures in the financial statements. The procedures selected depend on the auditors' judgment, including the assessment of the risks of material misstatement of the financial statements, whether due to fraud or error. In making those risk assessments, the auditor considers internal control relevant to the entity's preparation and fair presentation of the financial statements in order to design audit procedures that are appropriate in the circumstances, but not for the purpose of expressing an opinion on the effectiveness of the entity's internal control. Accordingly, we express no such opinion. An audit also includes evaluating the appropriateness of accounting policies used and the reasonableness of significant accounting estimates made by management, as well as evaluating the overall presentation of the financial statements.

We believe that the audit evidence we have obtained is sufficient and appropriate to provide a basis for our audit opinions.

Opinion

In our opinion, the financial statements referred to above present fairly, in all material respects, the respective financial position of the major fund of the Office as of September 30, 2019, and the respective changes in financial position, where applicable, thereof for the year then ended in accordance with accounting principles generally accepted in the United States of America.

Emphasis of Matter

As discussed in Note 1 to the financial statements, the financial statements referred to above were prepared solely for the purpose of complying with the Rules of the Auditor General of the State of Florida. In conformity with the Rules, the accompanying financial statements are intended to present the financial position and changes in financial position of the major fund, only for that portion of the major fund of Sumter County, Florida, that is attributable to the Office. They do not purport to, and do not, present fairly the financial position of Sumter County, Florida, as of September 30, 2019, and the changes in its financial position, where applicable, for the fiscal year then ended in accordance with accounting principles generally accepted in the United States of America. Our opinion is not modified with respect to these matters.

Other Matters

Required Supplementary Information

Accounting principles generally accepted in the United States of America require that the budgetary comparison schedule, as listed in the table of contents, be presented to supplement the financial statements. Such information, although not a required part of the basic financial statements, is required by the Governmental Accounting Standards Board who considers it to be an essential part of the basic financial reporting for placing the financial statements in an appropriate operational, economic, or historical context. We have applied certain limited procedures to the required supplementary information in accordance with auditing standards generally accepted in the United States of America, which consisted of inquiries of management about the methods of preparing the information and comparing the information for consistency with management's responses to our inquiries, the financial statements, and other knowledge we obtained during our audit of the financial statements. We do not express an opinion or provide any assurance on the information because the limited procedures do not provide us with sufficient evidence to express an opinion or provide any assurance.

Other Reporting Required by *Government Auditing Standards*

In accordance with *Government Auditing Standards*, we have also issued our report dated February 20, 2020, on our consideration of the Office's internal control over financial reporting and on our tests of its compliance with certain provisions of laws, regulations, contracts, and grant agreements and other matters. The purpose of that report is solely to describe the scope of our testing of internal control over financial reporting and compliance and the results of that testing, and not to provide an opinion on the effectiveness of the Office's internal control over financial reporting or on compliance. That report is an integral part of an audit performed in accordance with *Government Auditing Standards* in considering the Office's internal control over financial reporting and compliance.

Carr, Riggs & Ingram, L.L.C.

Gainesville, Florida
February 20, 2020

Balance Sheet – Governmental Funds
September 30, 2019

		General Fund
Assets		
Cash	$	135,705
Liabilities and fund balance		
Liabilities:		
Accounts payable and accrued liabilities	$	24,282
Due to other county agencies		96,862
Total liabilities		121,144
Fund balance - restricted for grant		14,561
Total liabilities and fund balances	$	135,705

The accompanying "Notes to Financial Statements" form an integral part of this statement.

Sumter County, Florida Supervisor of Elections

Statement of Revenues, Expenditures and Changes in Fund Balance
Governmental Funds
Year ended September 30, 2019

		General Fund
Revenues		
Intergovernmental	$	34,413
Expenditures		
Current:		
General government services		1,768,103
Excess of revenues under expenditures		(1,733,690)
Other financing sources (uses)		
Appropriation from board of county commissioners		1,745,503
Reversion to board of county commissioners		(96,862)
Total other financing sources (uses)		1,648,641
Net change in fund balance		(85,049)
Fund balance - beginning of year		99,610
Fund balance - end of year	$	14,561

The accompanying "Notes to Financial Statements" form an integral part of this statement.

NOTE 1 – SUMMARY OF SIGNIFICANT ACCOUNTING POLICIES

The accounting policies of the office of the Sumter County, Florida Supervisor of Elections (the "Office") conform to generally accepted accounting principles as applicable to governments. The following is a summary of the more significant policies.

Reporting Entity

The Supervisor of Elections is an elected constitutional officer, whose office is established by Article VIII of the Constitution of the State of Florida and is governed by various provisions of state law.

The Office is an integral part of Sumter County, Florida ("the County") which is the primary government for financial reporting purposes.

Basis of Presentation

The Office's financial statements have been prepared solely for the purpose of complying with the Rules of the Auditor General of the State of Florida (the "Rules"). These financial statements are the fund financial statements required by generally accepted accounting principles. However, these fund statements do not constitute a complete presentation because, in conformity with the Rules, the Office has not presented reconciliations to the government-wide financial statements, the government-wide financial statements, management's discussion and analysis, or the pension or the other post-employment benefit related required supplementary information. Also, certain notes to the financial statements may supplement rather than duplicate the notes included in the County's countywide financial statements. In conformity with the Rules, the accompanying financial statements are intended to present the financial position and changes in financial position, where applicable, of the major fund, only for that portion of the major fund of Sumter County, Florida, that is attributable to the Office. They do not purport to, and do not, present fairly the financial position of Sumter County, Florida, as of September 30, 2019, and the changes in financial position, where applicable, for the fiscal year then ended in accordance with accounting principles generally accepted in the United States of America.

Fund Accounting

Accounts are organized on the basis of funds, each of which is considered a separate accounting entity. The operations of each fund are accounted for with a separate set of self-balancing accounts that comprise its assets, liabilities, fund equity, revenues, and expenditures. Government resources are allocated to, and accounted for in, individual funds based upon the purposes for which they are to be spent and the means by which spending activities are controlled. The focus of fund financial statements is on major funds, each displayed in a separate column. All nonmajor funds are aggregated and displayed in a single column.

The Office reports the following major governmental fund:

> *General Fund* - the General Fund is the primary operating fund. It is used to account for and report all financial resources not accounted for and reported in another fund.

Fund Balance

The Office follows the provisions of GASB Statement No. 54, *Fund Balance Reporting and Governmental Fund Type Definitions*, to classify fund balances for governmental funds into specifically defined classifications. The classifications comprise a hierarchy based primarily on the extent to which the Office is bound to honor constraints on the specific purposes for which amounts in the funds can be spent.

NOTE 1 – SUMMARY OF SIGNIFICANT ACCOUNTING POLICIES (CONTINUED)

The fund balance classifications specified in GASB Statement No. 54 are as follows:

Nonspendable Fund Balance – Nonspendable fund balances are amounts that cannot be spent because they are either (a) not in spendable form or (b) legally or contractually required to be maintained intact.

Restricted Fund Balance – Restricted fund balances are restricted when constraints placed on the use of resources are either: (a) externally imposed by creditors, grantors, contributors, or laws or regulations of other governments; or (b) imposed by law through constitutional provisions or enabling legislation.

Committed Fund Balance – Committed fund balances are amounts that can only be used for specific purposes as a result of constraints imposed by formal action of the Office's highest level of decision-making authority, which is a policy of the Office. Committed amounts cannot be used for any other purpose unless the Office removes those constraints by taking the same type of action.

Assigned Fund Balance – Assigned fund balances are amounts that are constrained by the Office's intent to be used for specific purposes, but are neither restricted nor committed. Intent is expressed by (a) the constitutional officer or (b) a body or official to which the constitutional officer has delegated the authority to assign amounts to be used for specific purposes.

Unassigned Fund Balance – Unassigned fund balance is the residual classification for the General Fund.

The Office's policy is to expend resources in the following order: restricted, committed, assigned, and unassigned.

Measurement Focus/Basis of Accounting

All governmental funds are accounted for on a current financial resources measurement focus. This means that only current assets and current liabilities are generally included on their balance sheets. Their reported fund balance (net current assets) is considered a measure of "available spendable resources." Their operating statements present increases (revenues and other financing sources) and decreases (expenditures and other financing uses) in net current assets and, accordingly, are said to present a summary of sources and uses of "available spendable resources" during a period.

Basis of accounting refers to when revenues and expenditures are recognized in the accounts and reported in the financial statements. Basis of accounting relates to the timing of the measurements made, regardless of the measurement focus applied.

All governmental funds are accounted for using the modified accrual basis of accounting. Their revenues are recognized when they become measurable and available as net current assets. Expenditures are generally recognized under the modified accrual basis of accounting when the related fund liability is incurred. However, principal and interest on long-term debt are recognized when due.

NOTE 1 – SUMMARY OF SIGNIFICANT ACCOUNTING POLICIES (CONTINUED)

Cash

All cash is placed in banks that qualify as public depositories pursuant to the provisions of the Florida Security for Public Deposits Act. Every qualified public depository is required by this law to deposit with the Chief Financial Officer eligible collateral equal to, or in excess of, an amount to be determined by the Chief Financial Officer. The Chief Financial Officer is required to ensure that all funds are entirely insured or collateralized throughout the fiscal year.

Capital Assets and Long-Term Liabilities

Capital assets used by the Office are recorded by and accounted for by Sumter County, Florida (the "County").

Because of their spending measurement focus, expenditure recognition for governmental fund types is limited to exclude amounts represented by noncurrent liabilities. Since they do not affect net current assets, such long-term amounts are not recognized as governmental fund expenditures or fund liabilities. They are instead reported as liabilities in the financial statements of the County.

Use of Estimates

The preparation of financial statements in conformity with generally accepted accounting principles requires management to make various estimates. Actual results could differ from those estimates.

NOTE 2 – RISK MANAGEMENT

For health insurance the Office participates in the risk management program established by the Sumter County, Florida, Board of County Commissioners (the "Board") to cover claims against the Board and Constitutional Officers. The risk management program is accounted for in the Board's financial statements as an Internal Service Fund, in accordance with the requirements of GASB Statement 10.

For risks of loss related to worker's compensation, general liability and errors or omissions, the Office participates with the Board to purchase commercial insurance. For the past three years, there have been no insurance settlements in excess of insurance coverages.

Required Supplementary Information

Schedule of Revenues, Expenditures and Changes in Fund Balances
Budget and Actual – General Fund
Year ended September 30, 2019

	Budgeted Amounts			Variance
	Original	Final	Actual	With Final Budget
Revenues				
Intergovernmental	$ -	$ -	$ 34,413	$ 34,413
Expenditures				
Current:				
General government services	1,845,113	1,845,113	1,768,103	77,010
Deficiency of revenues under expenditures	(1,845,113)	(1,845,113)	(1,733,690)	111,423
Other financing source (uses)				
Appropriation from board of county commissioners	1,745,503	1,745,503	1,745,503	-
Reversion to board of county commissioners	-	-	(96,862)	(96,862)
Total other financing sources (uses)	1,745,503	1,745,503	1,648,641	(96,862)
Net change in fund balances	(99,610)	(99,610)	(85,049)	14,561
Fund balances - beginning of year	99,610	99,610	$ 99,610	-
Fund balances - end of year	$ -	$ -	$ 14,561	$ 14,561

Notes to Schedule:

The budget is prepared on a basis that does not differ materially from generally accepted accounting principles. Its preparation, adoption, and amendment is governed by Florida Statutes. The fund is the legal level of control.

Additional Elements Required by the Rules of the Auditor General

CRI CARR RIGGS & INGRAM
CPAs and Advisors

Carr, Riggs & Ingram, LLC
4010 N.W. 25th Place
Gainesville, Florida 32606
P.O. Box 13494
Gainesville, Florida 32604

(352) 372-6300
(352) 375-1583 (fax)
www.cricpa.com

MANAGEMENT LETTER

The Honorable William Keen
Supervisor of Elections
Sumter County, Florida

We have audited the financial statements of the office of the Sumter County, Florida Supervisor of Elections (the "Office"), as of and for the year ended September 30, 2019, and have issued our report thereon dated February 20, 2020.

Auditors' Responsibility

We conducted our audit in accordance with auditing standards generally accepted in the United States of America and the standards applicable to financial audits contained in *Government Auditing Standards*, issued by the Comptroller General of the United States, and Chapter 10.550, Rules of the Auditor General.

Other Reporting Requirements

We have issued our Independent Auditors' Report on Internal Control over Financial Reporting and on Compliance and Other Matters Based on an Audit of the Financial Statements Performed in Accordance with *Government Auditing Standards* and Independent Accountants' Report on an examination conducting in accordance with *AICPA Professional Standards*, AT-C Section 315, regarding compliance requirements in accordance with Chapter 10.550, Rules of the Auditor General. Disclosures in those reports, which are dated February 20, 2020, should be considered in conjunction with this management letter.

Prior Audit Findings

Section 10.554(1)(i)1.; Rules of the Auditor General, requires that we determine whether or not corrective actions have been taken to address findings and recommendations made in the preceding audit report. The Office had no such audit findings reported in the preceding audit report.

Financial Management

Section 10.554(1)(i)2.; Rules of the Auditor General, requires that we communicate any recommendations to improve financial management. In connection with our audit, we did not have any such recommendations.

Additional Matters

Section 10.554(1)(i)3.; Rules of the Auditor General, requires us to communicate noncompliance with provisions of contract or grant agreements, or abuse, that have occurred, or are likely to have occurred, that have an effect on the financial statements that is less than material but which warrants the attention of those charged with governance. In connection with our audit, we did not note any such findings.

Purpose of this Letter

Our management letter is intended solely for the information and use of the Legislative Auditing Committee, members of the Florida Senate and Florida House of Representatives, the Florida Auditor General, the Sumter County, Florida Tax Collector, and applicable management, and is not intended to be and should not be used by anyone other than those specified parties.

We wish to take this opportunity to thank you and your staff for the cooperation and courtesies extended to us during the course of the audit. Please let us know if you have any questions or comments concerning this letter, our accompanying reports, or other matters.

Carr, Riggs & Ingram, L.L.C.

Gainesville, Florida
February 20, 2020

CRI CARR RIGGS & INGRAM
CPAs and Advisors

Carr, Riggs & Ingram, LLC
4010 N.W. 25th Place
Gainesville, Florida 32606
P.O. Box 13494
Gainesville, Florida 32604

(352) 372-6300
(352) 375-1583 (fax)
www.cricpa.com

INDEPENDENT AUDITORS' REPORT ON INTERNAL CONTROL OVER FINANCIAL REPORTING AND ON COMPLIANCE AND OTHER MATTERS BASED ON AN AUDIT OF FINANCIAL STATEMENTS PERFORMED IN ACCORDANCE WITH *GOVERNMENT AUDITING STANDARDS*

The Honorable William Keen
Supervisor of Elections
Sumter County, Florida

We have audited, in accordance with the auditing standards generally accepted in the United States of America and the standards applicable to financial audits contained in *Government Auditing Standards* issued by the Comptroller General of the United States, the financial statements of the office of the Sumter County, Florida Supervisor of Elections (the "Office"), as of and for the year ended September 30, 2019, and the related notes to the financial statements, which collectively comprise the Office's financial statements, and have issued our report thereon dated February 20, 2020.

Internal Control over Financial Reporting

In planning and performing our audit of the financial statements, we considered the Office's internal control over financial reporting (internal control) to determine the audit procedures that are appropriate in the circumstances for the purpose of expressing our opinion on the financial statements, but not for the purpose of expressing an opinion on the effectiveness of the Office's internal control. Accordingly, we do not express an opinion on the effectiveness of the Office's internal control.

A *deficiency in internal control* exists when the design or operation of a control does not allow management or employees, in the normal course of performing their assigned functions, to prevent, or detect and correct, misstatements on a timely basis. A *material weakness* is a deficiency, or a combination of deficiencies, in internal control, such that there is a reasonable possibility that a material misstatement of the entity's financial statements will not be prevented, or detected and corrected on a timely basis. A *significant deficiency* is a deficiency, or a combination of deficiencies, in internal control that is less severe than a material weakness, yet important enough to merit attention by those charged with governance.

Our consideration of internal control was for the limited purpose described in the first paragraph of this section and was not designed to identify all deficiencies in internal control that might be material weaknesses or significant deficiencies. Given these limitations, during our audit we did not identify any deficiencies in internal control that we consider to be material weaknesses. However, material weaknesses may exist that have not been identified.

Compliance and Other Matters

As part of obtaining reasonable assurance about whether the Office's financial statements are free from material misstatement, we performed tests of its compliance with certain provisions of laws, regulations, contracts, and grant agreements, noncompliance with which could have a direct and material effect on the determination of financial statement amounts. However, providing an opinion on compliance with those provisions was not an objective of our audit, and accordingly, we do not express such an opinion. The results of our tests disclosed no instances of noncompliance or other matters that are required to be reported under *Government Auditing Standards*.

Purpose of this Report

The purpose of this report is solely to describe the scope of our testing of internal control and compliance and the results of that testing, and not to provide an opinion on the effectiveness of the entity's internal control or on compliance. This report is an integral part of an audit performed in accordance with *Government Auditing Standards* in considering the entity's internal control and compliance. Accordingly, this communication is not suitable for any other purpose.

Carr, Riggs & Ingram, L.L.C.

Gainesville, Florida
February 20, 2020

CRI CARR RIGGS & INGRAM
CPAs and Advisors

Carr, Riggs & Ingram, LLC
4010 N.W. 25th Place
Gainesville, Florida 32606
P.O. Box 13494
Gainesville, Florida 32604

(352) 372-6300
(352) 375-1583 (fax)
www.cricpa.com

INDEPENDENT ACCOUNTANTS' REPORT ON COMPLIANCE WITH SECTION 218.415, FLORIDA STATUTES

To the Honorable William Keen
Supervisor of Elections
Sumter County, Florida

We have examined the office of the Sumter County, Florida Supervisor of Elections' (the "Office") compliance with the requirements of Section 218.415, Florida Statutes, *Local Government Investment Policies*, during the year ended September 30, 2019. Management is responsible for the Office's compliance with the specified requirements. Our responsibility is to express an opinion on the Office's compliance with specified requirements based on our examination.

Our examination was conducted in accordance with attestation standards established by the American Institute of Certified Public Accountants. Those standards require that we plan and perform the examination to obtain reasonable assurance about whether the Office compiled, in all material respects, with the specified requirements referenced above. An examination involves performing procedures to obtain evidence about whether the Office compiled with the specified requirements. The nature, timing, and extent of the procedures selected depend on our judgement, including an assessment of the risks of material noncompliance, whether due to fraud or error. We believe that the evidence we obtained is sufficient and appropriate to provide a reasonable basis for our opinion.

Our examination does not provide a legal determination on the Office's compliance with specified requirements.

In our opinion, the Office complied, in all material respects, with the requirements of Section 218.415, Florida Statutes, *Local Government Investment Policies,* for the year ended September 30, 2019.

This report is intended solely for the information and use of management and the State of Florida Auditor General, and is not intended to be and should not be used by anyone other than these specified parties.

Carr, Riggs & Ingram, L.L.C

Gainesville, Florida
February 20, 2020

William "Bill" Keen, Supervisor of Elections
Sumter County, Florida
• www.sumterelections.org • info@sumterelections.org • (352) 569-1540 • Fax (352) 569-1541

February 20, 2020

The Honorable Sherrill F. Norman
State of Florida Auditor General
Claude Pepper Building
111 West Madison Street
Tallahassee, FL 32399-1450

Dear Honorable Sherrill Norman,

I have been presented with the audit report for the Supervisor of Elections' office for the fiscal year ending September 30, 2019. I am pleased to note that there were no adverse findings which require corrective action.

Thank you,

William" Bill" Keen
Sumter County Supervisor of Elections

MAIN OFFICE
Villages Sumter County Service Center
7375 Powell Road, Suite 125
Wildwood, FL 34785

BUSHNELL ANNEX OFFICE
316 E. Anderson Ave.
Bushnell, FL 33513

SUMTER COUNTY BOARD OF COUNTY COMMISSIONERS
EXECUTIVE SUMMARY

SUBJECT: **FY 2019-20 Quarter 2 Report from Department of Health (For Information Only).**

REQUESTED ACTION: **For Information Only**

Meeting Type: Regular Meeting **DATE OF MEETING:** **5/12/2020**

CONTRACT: ☒ N/A Vendor/Entity:
Effective Date: Termination Date:
Managing Division / Dept: **Office of Management & Budget**

BUDGET IMPACT: N/A
FUNDING SOURCE:
Type: N/A **EXPENDITURE ACCOUNT:**

HISTORY/FACTS/ISSUES:

Sumter County's contract with the Sumter County Health Department requires the County Health Department to provide quarterly a "DE385L1 Contract Management Variance Report" and a "DE580L1 Analysis of Fund Equities Report". The reports for the second quarter of FY 2019-20 are attached for your information.

Prepared by: **Jennifer Hemeon** **Grammarly Check** ☒

April 15, 2020

APR 21 2020

The Honorable Steve Printz, Chairman
Board of Sumter County Commissioners
7375 Powell Road
Wildwood, Florida 34785

RE: FY 2019-20 Contract between the Board of Sumter County Commissioners and the Department of Health for operation of the Sumter County Health Department

Dear Chairman Printz:

The above-referenced Core Contract and Section 154.02, Florida Statutes, require that the Department of Health submit quarterly reports to the County with the following information.

As specified in Section 6., Paragraphs o.i and ii, also enclosed are the DE385L1 Contract Management Variance Report and the DE580L1 Analysis of Fund Equities Report. A written explanation will be provided for any service level expenditure variance that deviates more than 25 percent from the planned service expenditure amount and exceeds three percent of the total planned expenditures for the corresponding level of service at the end of the contract year.

If you have any questions, please feel free to contact me at (352) 569-3138.

Respectfully,

Sanford D. Zelnick, D.O., M.S., Director
Sumter County Health Department

Enclosures

Cc: Keith Hunter, M.P.H., C.P.H., Assistant Director

Sumter Contract Management Variance Report for Period 10/01/2019 to 03/31/2020

Program	Reported FTEs	Planned FTEs	% Variance FTE	Reported Clients/ Units	Planned Clients/ Units	% Variance Clients/ Units	Reported Visits/ Services	Planned Visits/ Services	% Variance Visits/ Services	Reported Expenditures	Planned Expenditures	% Variance Expenditures
Communicable Disease Section												
01:Immunization	3.23	3.22	0.31	620	698	-11.11	803	876	-8.28	$124,244.68	$121,070.00	2.62
02:Sexually Trans. Dis.	5.15	3.04	69.41	187	128	46.09	307	210	46.54	$182,370.40	$108,434.00	68.19
03:AIDS	1.99	1.76	13.07	45	44	2.27	207	172	20.35	$67,100.73	$74,876.00	-10.38
04:Tuberculosis	0.63	0.41	53.66	6	4	71.43	72	30	144.07	$20,222.45	$18,607.00	8.68
06:Comm. Dis. Surv.	1.96	1.84	6.52	0	0		82	171	-51.91	$55,136.68	$71,895.00	-23.31
09:Hepatitis	0.00	0.00		8	0		10	0		$134.84	$0.00	
16:Preparedness and Response	4.09	3.73	9.65	0	0		395	1	78,900.00	$204,888.17	$153,141.00	33.79
18:Refugee Health	0.00	0.00		0	0		0	0		$0.00	$0.00	
80:Vital Records	3.08	3.09	-0.32	2,639	2,851	-7.44	11,746	12,006	-2.17	$74,496.83	$87,527.00	-14.89
Communicable Disease Totals	20.13	17.09	17.79	3,505	3,724	-5.88	13,622	13,464	1.18	$728,594.78	$635,550.00	14.64
Primary Care Section												
10:Chronic Disease Prevention Pro	2.14	2.41	-11.20	0	0		0	0		$51,081.21	$87,656.00	-41.73
12:Tobacco Use Intervention	2.06	2.45	-15.92	0	0		0	0		$63,220.50	$66,105.00	-4.36
21:WIC	0.00	0.00		891	0		920	0		$0.00	$0.00	
23:Family Planning	6.35	4.70	35.11	211	223	-5.17	559	458	22.19	$221,952.54	$202,268.00	9.73
25:Improved Pregnancy Outcome	0.00	1.34	-100.00	0	34	-100.00	0	67	-100.00	$0.00	$44,240.00	-100.00
27:Healthy Start Prenatal	0.11	0.04	175.00	0	1	-100.00	0	2	-100.00	$2,601.69	$891.00	192.00
29:Comprehensive Child Health	0.07	0.37	-81.08	8	74	-89.19	8	78	-89.68	$2,516.95	$14,955.00	-83.17
31:Healthy Start Child	0.01	0.00		0	0		0	0		$1.99	$0.00	
34:School Health	5.88	4.65	26.45	0	0		43,827	32,510	34.81	$153,433.47	$143,357.00	7.03
37:Comprehensive Adult Health	0.90	2.32	-61.21	19	51	-62.38	30	90	-66.67	$36,202.90	$97,583.00	-62.90
38:Community Health Development	8.72	3.59	142.90	0	0		2	2	33.33	$98,900.85	$120,947.00	-18.23
40:Dental Health	0.85	0.88	-3.41	190	131	45.04	190	131	45.04	$45,677.97	$26,933.00	69.60
Primary Care Totals	27.09	22.75	19.08	1,319	512	157.62	45,536	33,337	36.60	$675,590.08	$804,935.00	-16.07
Environmental Health Section												
1:Water & Onsite Sewage	2.72	3.43	-20.70	258	405	-36.22	607	839	-27.61	$80,521.33	$106,264.00	-24.23
2:Facility Programs	1.91	1.66	15.06	81	203	-60.00	481	439	9.69	$48,079.90	$46,365.00	3.70
3:Groundwater Contamination Program	0.05	0.03	66.67	1	2	-50.00	31	7	342.86	$845.33	$1,394.00	-39.36
4:Community Hygiene	1.40	1.73	-19.08	152	228	-33.33	229	348	-34.20	$41,425.30	$57,307.00	-27.71
Environmental Health Totals	6.08	6.85	-11.24	492	837	-41.22	1,348	1,632	-17.40	$170,871.86	$211,330.00	-19.14
CHD Totals	**53.30**	**46.69**	**14.16**	**5,316**	**5,073**	**4.79**	**60,506**	**48,432**	**24.93**	**$1,575,056.71**	**$1,651,815.00**	**-4.65**

Sumter DE580 Analysis of Fund Equities Report

Note: This report is based upon Schedule C, FIRS and year-to-date FLAIR transactions as of 03/31/2020

FIRS RT$_n$ Report

Sumter CHD (643660) DE580 Analysis of Fund Equities Report for fiscal year 2019-2020 as of 03/31/2020

		Actual Year-to-Date (through Mar)				
OCA	OCA Title	Beginning Cash	Revenues YTD	Expenditures YTD	Certified Forward Expenditures YTD	Actual Cash YTD
State						
1E000	ON SITE SEWAGE DISPOSAL PERMIT FEES	120.8	6,002.40	6,061.60	0	61.6
1O000	SANITATION CERTIFICATES (FOOD INSPECTION)	0	990.62	990.62	0	0
3S000	INSPECTIONS OF SUMMER FEEDING PROGRAM - DOE	4,696.00	0	0	0	4,696.00
7F000	CHD - TB COMMUNITY PROGRAM	0	16,695.00	16,439.39	259.1	-3.49
9V000	STATE UNDERGROUND PETROLEUM RESPONSE ACT	26,389.50	2,232.00	0	0	28,621.50
B9000	SEPTIC TANK RESEARCH SURCHARGE	15	625	635	0	5
BU000	ENVIRONMENTAL BIOMEDICAL WASTE PROGRAM	0	2,178.00	2,904.00	0	-726
CIP19	COMPREHENSIVE COMMUNITY CARDIO - PHBG	0	22,291.48	22,291.48	0	0
DE018	CMS-MCH PURCHASED CLIENT SERVICES	-381.81	381.81	0	0	0
ENVFE	CHD STATEWIDE ENVIRONMENTAL FEES	-151,435.68	128,249.94	180,121.60	9,787.51	-213,094.85
EPIGR	EPIDEMIOLOGY SURVEILLANCE GENERAL REVENUE	0	59,277.00	54,560.83	0	4,716.17
FMP20	FAMILY PLANNING TITLE X - GRANT	-5,961.84	37,801.84	31,840.00	0	0
FMPGR	FAMILY PLANNING GENERAL REVENUE	0	34,368.00	28,541.98	0	5,826.02
HPC19	ADULT VIRAL HEPATITIS PREVENTION COORDINATOR	0	5,568.00	5,568.00	0	0
IMM20	IMMUNIZATION ACTION PLAN	0	7,337.00	7,337.00	0	0
K3000	PUBLIC SWIMMING POOL PERMIT FEES-10% HQ TRANSFER	2,562.50	775	3,337.50	0	0
M5000	DRINKING WATER PROGRAM OPERATIONS	0	513	513	0	0
MC238	MCH SPECIAL PRJCT UNPLANNED PREGNANCY	-1,248.60	1,248.60	0	0	0
MC239	MCH SPECIAL PRJCT UNPLANNED PREGNANCY	0	7,910.00	7,910.00	0	0
MC388	MCH SPEC PRJ SOCIAL DETERMINANTS HLTH COMM EDU	-842.94	842.94	0	0	0
MC389	MCH SPEC PRJ SOCIAL DETERMINANTS HLTH COMM EDU	0	2,360.00	3,339.29	0	-979.29
MCHB8	MCH BLOCK GRANT FLORIDAS HEALTHY BABIES	-2,565.13	2,565.13	0	0	0
MCHB9	MCH BLOCK GRANT FLORIDAS HEALTHY BABIES	0	660.94	1,181.62	0	-520.68
NCGRV	CHD GENERAL REVENUE NON-CATEGORICAL	0	364,603.00	355,813.92	9,287.06	-497.98
PCG00	PRIMARY CARE PROGRAM	0	119,907.00	119,848.65	58.35	0
PHCP0	BASE COMMUNITY PREPAREDNESS CAPABILITY	0	63,382.53	65,410.03	0	-2,027.50
PHCP9	BASE COMMUNITY PREPAREDNESS CAPABILITY	-7,566.47	59,010.99	48,270.19	3,174.33	0
R9000	TANNING FACILITIES	0	113.5	113.5	0	0
SCHGR	SCHOOL HEALTH SERVICES - GENERAL REVENUE	0	69,000.00	66,851.52	0	2,148.48
SCHSP	SUPPLEMENTAL SCHOOL HEALTH	0	15,327.00	15,327.00	0	0
SEWTN	ONSITE SEWAGE TRAINING CENTER	15	475	480	0	10
TATTO	TATTO PROGRAM ENVIRONMENTAL HEALTH	0	450	450	0	0
TCI19	TOBACCO STATE AND COMMUNITY INTERVENTIONS	5,134.08	0	0.74	3,372.13	1,761.21
TCI20	TOBACCO STATE AND COMMUNITY INTERVENTIONS	35,976.41	72,058.00	65,819.16	0	42,215.25
UQ000	MOBILE HOME & RV PARK FEES	0	1,756.40	1,756.40	0	0
	State Total	**-95,093.18**	**1,106,957.12**	**1,113,714.02**	**25,938.48**	**-127,788.56**
Local						
CLFEE	CHD CLINIC FEES	-398,347.59	107,779.65	280,040.10	32,601.94	-603,209.98
COR19	CORONAVIRUS	0	0	5,966.25	0	-5,966.25
CPGCR	GENERAL CLINIC RABIES SERVICES & DRUG PURCHASES	9,573.56	9,264.25	21,775.56	0	-2,937.75
ENVLF	CHD LOCAL ENVIRONMENTAL FEES	37,510.97	15,777.00	1,372.12	0	51,915.85
HEP20	HEP A VACCINES	0	30,000.00	20,047.96	0	9,952.04
HSCNT	CHD HEALTHY START COALITION CONTRACT	-7,510.54	814	2,229.16	119.72	-9,045.42
JV000	VITAL STATISTICS CERTIFIED RECORDS	642,825.59	193,581.38	68,368.42	2,981.21	765,057.34
LOGOV	CHD LOCAL REVENUE & EXPENDITURES	317,718.74	959,010.45	771,061.88	63,867.83	441,799.48
MLH2A	MIGRANT LABOR HOUSING INSPECTION H-2A PROGRAM	130.41	0	0	0	130.41
NACMR	NACCHO - MEDICAL RESERVE CORPS	305.31	0	305	0	0.31
RWCGP	RYAN WHITE CONTRACTED GRANT PROGRAM	-128,009.11	43,225.14	46,397.13	1,799.98	-132,981.08
SALGS	CHD SALE OF SERVICES IN OR OUTSIDE OF STATE GOVT	2,050.97	171	-98	0	2,319.97
SCHHL	SCHOOL HEALTH CLINICS FUNDED BY SCHOOL BOARD	7,232.81	15,000.00	24,095.09	0	-1,862.28
TSMAR	HURRICANE MARIA	-1,601.49	0	0	0	-1,601.49
	Local Total	**481,879.63**	**1,374,622.87**	**1,241,560.67**	**101,370.68**	**513,571.15**
	Grand Total	**386,786.45**	**2,481,579.99**	**2,355,274.69**	**127,309.16**	**385,782.59**

SUMTER BOARD OF COMMISSIONERS
Payment Register Print

Batch: 0 Period: 03/05/20

Payment Number	HP/ VD	Vendor Number	Name/ Description	Invoice/ Items	Gross Amount	Discounts/ Deductions	Net Pay	Paid Date	Batch Number
			FOR BANK ACCOUNT:2 SUNTRUST BANK, NATURE COAST		PAYABLES CLEARING ACCOUNT				
1069130		7	CLERK OF CIRCUIT COURT						
			RELEASE OF LIEN COD ENF	2214	10.00	0.00	10.00		
			** PAYMENT TOTAL **	1	10.00	0.00	10.00	03/05/20	76818
1069131		7	CLERK OF CIRCUIT COURT						
			RECORD SAT OF CR LIEN	2215	10.00	0.00	10.00		
			** PAYMENT TOTAL **	1	10.00	0.00	10.00	03/05/20	76818
1069132		64	BLUE CROSS BLUE SHIELD OF FLA.						
			Plan Mgmnt ASO Fees 60668	MAR2020ASO-1	38,846.47	0.00	38,846.47		
			** PAYMENT TOTAL **	1	38,846.47	0.00	38,846.47	03/05/20	76818
1069133		364	CDW COMPUTER GOVERNMENT INC						
			Cisco 11AC WAVE 0728881	WWQ7685	327.08	0.00	327.08		
			** PAYMENT TOTAL **	1	327.08	0.00	327.08	03/05/20	76818
1069134		402	CITY OF BUSHNELL						
			20113220-0 1/13-2/17	20113220-0021720	899.01	0.00	899.01		
			20113575-0 1/13-2/17	20113575-0021720	41.25	0.00	41.25		
			** PAYMENT TOTAL **	2	940.26	0.00	940.26	03/05/20	76818
1069135		402	CITY OF BUSHNELL						
			JAN 2020 MOTOR FUEL TAX	JAN2020MOTORFUELTAX	1,936.12	0.00	1,936.12		
			** PAYMENT TOTAL **	1	1,936.12	0.00	1,936.12	03/05/20	76818
1069136		406	CITY OF CENTER HILL						
			JAN 2020 MOTOR FUEL TAX	JAN2020MOTORFUELTAX	885.65	0.00	885.65		
			** PAYMENT TOTAL **	1	885.65	0.00	885.65	03/05/20	76818
1069137		409	CITY OF WEBSTER						
			JAN 2020 MOTOR FUEL TAX	JAN2020MOTORFUELTAX	630.48	0.00	630.48		
			** PAYMENT TOTAL **	1	630.48	0.00	630.48	03/05/20	76818
1069138		413	CITY OF WILDWOOD						
			JAN 2020 MOTOR FUEL TAX	JAN2020MOTORFUELTAX	9,775.94	0.00	9,775.94		
			** PAYMENT TOTAL **	1	9,775.94	0.00	9,775.94	03/05/20	76818
1069139		415	CITY OF COLEMAN						
			JAN 2020 MOTOR FUEL TAX	JAN2020MOTORFUELTAX	559.99	0.00	559.99		
			** PAYMENT TOTAL **	1	559.99	0.00	559.99	03/05/20	76818
1069140		519	THE VILLAGES DAILY SUN						
			01116977 NOT TAS IMPACT 2/11	928991	149.63	0.00	149.63		
			01116977 INV TO BID 2/21	932051	197.60	0.00	197.60		
			01116977 INV TO BID 2/21	932329	81.70	0.00	81.70		
			01116977 INV TO BID 2/25	932814	78.85	0.00	78.85		
			** PAYMENT TOTAL **	4	507.78	0.00	507.78	03/05/20	76818
1069141		680	DUKE ENERGY						
			24492 19034 1/22-2/20	2449219034022020	15.25	0.00	15.25		

Batch: 0 Period: 03/05/20

Payment Number	HP/ VD	Vendor Number	Name/ Description	Invoice/ Items	Gross Amount	Discounts/ Deductions	Net Pay	Paid Date	Batch Number
			60261 12225 1/22-2/21	6026112225022120	36.15	0.00	36.15		
			** PAYMENT TOTAL **	2	51.40	0.00	51.40	03/05/20	76818
1069142		780	W W GRAINGER						
			PLATE CASTER SWIVEL 829848217	9456750604	47.68	0.00	47.68		
			COLLAPSIBLE CONTAIN 829848217	9456750612	378.02	0.00	378.02		
			** PAYMENT TOTAL **	2	425.70	0.00	425.70	03/05/20	76818
1069143		875	HAJOCA CORP - DBA HUGHES SUPPLY						
			PARK GARAGE PLUMBING U1434622	S157349900-001	399.03	0.00	399.03		
			** PAYMENT TOTAL **	1	399.03	0.00	399.03	03/05/20	76818
1069144		946	JOHNSTONE SUPPLY						
			Parts to Rep Ice Machine 9191	S8507609-001	113.19	0.00	113.19		
			Parts to Rep Ice Machine 9191	S8507638-001	113.19	0.00	113.19		
			** PAYMENT TOTAL **	2	226.38	0.00	226.38	03/05/20	76818
1069145		1468	SHERIFF OF SUMTER COUNTY						
			MARCH 2020 BUDGET REQ	MAR2020	2,828,140.30	0.00	2,828,140.30		
			** PAYMENT TOTAL **	1	2,828,140.30	0.00	2,828,140.30	03/05/20	76818
1069146		1469	SHERIFF OF SUMTER CO.						
			FEB 2020 BUSHNELL LAW ENF	FEB2020BUSHNELL	64,164.08	0.00	64,164.08		
			FEB 2020 COLEMAN LAW ENF	FEB2020COLEMAN	8,856.50	0.00	8,856.50		
			FEB 2020 WEBSTER LAW ENF	FEB2020WEBSTER	11,603.59	0.00	11,603.59		
			** PAYMENT TOTAL **	3	84,624.17	0.00	84,624.17	03/05/20	76818
1069147		1565	SECO ENERGY						
			6010241300 1/22-2/21	6010241300022120	33.30	0.00	33.30		
			6011039801 1/21-2/20	6011039801022020	52.07	0.00	52.07		
			6760160011 1/21-2/20	6760160011022020	246.89	0.00	246.89		
			6760166011 1/21-2/20	6760166011022020	151.66	0.00	151.66		
			8013775400 1/21-2/20	8013775400022020	46.99	0.00	46.99		
			9603323601 1/21-2/20	9603323601022020	1,238.59	0.00	1,238.59		
			9604030401 1/21-2/20	9604030401022020	2,075.07	0.00	2,075.07		
			9604030601 1/21-2/20	9604030601022020	36.49	0.00	36.49		
			9604030701 1/21-2/20	9604030701022020	42.78	0.00	42.78		
			9604031001 1/21-2/20	9604031001022020	172.09	0.00	172.09		
			9604031401 1/21-2/20	9604031401022020	39.30	0.00	39.30		
			9604031501 1/21-2/20	9604031501022020	103.78	0.00	103.78		
			9604031601 1/21-2/20	9604031601022020	61.85	0.00	61.85		
			9604031701 1/21-2/20	9604031701022020	48.50	0.00	48.50		
			9604118801 1/21-2/20	9604118801022020	55.35	0.00	55.35		
			** PAYMENT TOTAL **	15	4,404.71	0.00	4,404.71	03/05/20	76818
1069148		1712	WASTE MANAGEMENT INC OF FL						
			3-79102-22001 3/1-31	0388127-2227-0	497.48	0.00	497.48		

Batch: 0 Period: 03/05/20

Payment Number	HP/ VD	Vendor Number	Name/ Description	Invoice/ Items	Gross Amount	Discounts/ Deductions	Net Pay	Paid Date	Batch Number
			10-57681-73000 3/1-31	0388442-2227-3	87.16	0.00	87.16		
			16-47487-73004 3/1-31	0389338-2227-2	87.16	0.00	87.16		
			16-47580-43007 3/1-31	0389339-2227-0	87.16	0.00	87.16		
			17-90820-83006 3/1-31	0389467-2227-9	87.16	0.00	87.16		
			17-90846-23009 3/1-31	0389468-2227-7	87.16	0.00	87.16		
			17-90878-93005 3/1-31	0389469-2227-5	87.16	0.00	87.16		
			17-90913-03001 3/1-31	0389470-2227-3	87.16	0.00	87.16		
			17-91053-43001 3/1-31	0389471-2227-1	167.16	0.00	167.16		
			17-91412-43007 3/1-31	0389473-2227-7	87.16	0.00	87.16		
			17-91464-33006 3/1-31	0389474-2227-5	87.16	0.00	87.16		
			17-95917-33000 3/1-31	0389477-2227-8	87.16	0.00	87.16		
			17-96022-63003 3/1-31	0389478-2227-6	87.16	0.00	87.16		
			18-00255-53003 3/1-31	0389482-2227-8	87.16	0.00	87.16		
			19-04731-93009 3/1-31	0389593-2227-2	87.16	0.00	87.16		
			19-51444-13005 3/1-31	0389641-2227-9	87.16	0.00	87.16		
			** PAYMENT TOTAL **	16	1,884.88	0.00	1,884.88	03/05/20	76818
1069149		1763	WITHLACOOCHEE RIVER ELEC						
			10138863 1230737 2/26	1230737022620	7.06	0.00	7.06		
			** PAYMENT TOTAL **	1	7.06	0.00	7.06	03/05/20	76818
1069150		1987	PRIDE ENTERPRISES						
			Cleaning Supplies 233557	E1120171	165.17	0.00	165.17		
			** PAYMENT TOTAL **	1	165.17	0.00	165.17	03/05/20	76818
1069151		2013	A-LINE FIRE & SAFETY INC						
			Replace Courthouse Keypad	11881	444.40	0.00	444.40		
			Installation of Sec Sys PD OFF	57666E	4,084.49	0.00	4,084.49		
			** PAYMENT TOTAL **	2	4,528.89	0.00	4,528.89	03/05/20	76818
1069152		2237	THE VILLAGES OF LK-SUMTER INC						
			REIMB CR468 FROM 301-CR505	019-RW	110,147.76	0.00	110,147.76		
			** PAYMENT TOTAL **	1	110,147.76	0.00	110,147.76	03/05/20	76818
1069153		2311	GALLS, LLC						
			Firefighters Uniforms 5420981	014977868	198.00	0.00	198.00		
			Firefighters Uniforms 5420981	014984093	13.60	0.00	13.60		
			Firefighters Uniforms 5420981	015006151	68.00	0.00	68.00		
			Firefighters Uniforms 5420981	015022224	15.84	0.00	15.84		
			Firefighters Uniforms 5420981	015044720	60.41	0.00	60.41		
			Firefighters Uniforms 5420981	015058430	126.15	0.00	126.15		
			** PAYMENT TOTAL **	6	482.00	0.00	482.00	03/05/20	76818
1069154		2710	CITY ELECTRIC SUPPLY						
			ODP for Lot Lightg 01271074002	OCA303763	4,850.00	0.00	4,850.00		
			ODP for Lot Lightg 01271074002	OCA304891	25,650.00	0.00	25,650.00		

Batch: 0 Period: 03/05/20

Payment Number	HP/ VD	Vendor Number	Name/ Description	Invoice/ Items	Gross Amount	Discounts/ Deductions	Net Pay	Paid Date	Batch Number
			ODP Lot Site Light 01271074002	OCA306590	576.16	0.00	576.16		
			** PAYMENT TOTAL **	3	31,076.16	0.00	31,076.16	03/05/20	76818
1069155		2803	PATTERSON VETERINARY SUPPLY, INC						
			NEEDLE MONO 0200137618	3003047730	17.64	0.00	17.64		
			0200137618 NEEDLE MONO	3003188549	17.64-	0.00	17.64-		
			0200137618 NEEDLE MONO	3003188553	15.38	0.00	15.38		
			** PAYMENT TOTAL **	3	15.38	0.00	15.38	03/05/20	76818
1069156		2872	PC CONNECTION SALES CORP						
			Fatpipe Ann Renewal 12868630	57540651	9,316.80	0.00	9,316.80		
			** PAYMENT TOTAL **	1	9,316.80	0.00	9,316.80	03/05/20	76818
1069157		2930	MUNICIPAL EQUIPMENT CO						
			Structural&Station Boots 19348	413870-0	830.25	0.00	830.25		
			STATION BOOTS 19348	414107-00	276.75-	0.00	276.75-		
			** PAYMENT TOTAL **	2	553.50	0.00	553.50	03/05/20	76818
1069158		3755	GLOBAL TIRE RECYCLING						
			Tire Disposal	35065	370.40	0.00	370.40		
			** PAYMENT TOTAL **	1	370.40	0.00	370.40	03/05/20	76818
1069159		3921	TAMPA BAY TRANE						
			Oil Analysis Both Circ SUM000	243328	721.64	0.00	721.64		
			** PAYMENT TOTAL **	1	721.64	0.00	721.64	03/05/20	76818
1069160		3955	LOWERY'S TRUE VALUE						
			Rep Amenities County Park 1328	78315-1	89.75	0.00	89.75		
			** PAYMENT TOTAL **	1	89.75	0.00	89.75	03/05/20	76818
1069161		4112	STRYKER SALES CORPORATION						
			Lifepak rainbow sensors	2921255M	2,492.20	0.00	2,492.20		
			** PAYMENT TOTAL **	1	2,492.20	0.00	2,492.20	03/05/20	76818
1069162		4167	C.W. ROBERTS CONTRACTING, INC						
			Hot Mix Asphalt 14027	66191	130.18	0.00	130.18		
			Hot Mix Asphalt 14027	74480	771.54	0.00	771.54		
			Hot Mix Asphalt 14027	74609	1,078.87	0.00	1,078.87		
			** PAYMENT TOTAL **	3	1,980.59	0.00	1,980.59	03/05/20	76818
1069163		4353	KIMLEY-HORN AND ASSOC, INC						
			142109123.1 BVB EXT DESIGN	15713279	36,106.06	0.00	36,106.06		
			** PAYMENT TOTAL **	1	36,106.06	0.00	36,106.06	03/05/20	76818
1069164		4641	NORTH SUMTER COUNTY UTILITY						
			N030-6390-00 1/15-2/14	N030-6390-00021420	141.14	0.00	141.14		
			** PAYMENT TOTAL **	1	141.14	0.00	141.14	03/05/20	76818
1069165		4748	IMAGE ONE CORPORATION						
			Records / Plans Scan SUMBOC010	340530	1,339.05	0.00	1,339.05		
			OPEN TEXT/AX SERVER SAMC	340655	6,185.66	0.00	6,185.66		

Batch: 0 Period: 03/05/20

Payment Number	HP/ VD	Vendor Number	Name/ Description	Invoice/ Items	Gross Amount	Discounts/ Deductions	Net Pay	Paid Date	Batch Number
			** PAYMENT TOTAL **	2	7,524.71	0.00	7,524.71	03/05/20	76818
1069166		4803	SHI INTERNATIONAL CORP.						
			WINDOWS-MULT PLATFORM 1006488	B11366776	77.80	0.00	77.80		
			** PAYMENT TOTAL **	1	77.80	0.00	77.80	03/05/20	76818
1069167		5186	CENTURYLINK						
			311022684 2/25/20	311022684022520	2,838.30	0.00	2,838.30		
			320149359 2/19/20	320149359021920	33.43	0.00	33.43		
			** PAYMENT TOTAL **	2	2,871.73	0.00	2,871.73	03/05/20	76818
1069168		5186	CENTURYLINK						
			148-229 88683647 2/15	1486306417	1,298.27	0.00	1,298.27		
			148-229 88686139 2/15/20	1486306581	686.06	0.00	686.06		
			88860521 IP & DATA SVC 2/8/20	89376531	2,879.03	0.00	2,879.03		
			** PAYMENT TOTAL **	3	4,863.36	0.00	4,863.36	03/05/20	76818
1069169		5222	KYOCERA DOCUMENT SOLUTIONS						
			Copy Charges 4922-01 SC22	55V1164642	1,135.28	0.00	1,135.28		
			COPY CHGS SC22 1047-01	55V1164643	355.64	0.00	355.64		
			** PAYMENT TOTAL **	2	1,490.92	0.00	1,490.92	03/05/20	76818
1069170		5433	OUTER IMAGE INC						
			Move & Set Up 10x16 Shed	22507	350.00	0.00	350.00		
			Remove & Replace Front Door	22519	110.00	0.00	110.00		
			BUSINESS CARDS FIRE/EMS	22548	44.00	0.00	44.00		
			Business Cards Deborah Snyder	22570	37.50	0.00	37.50		
			** PAYMENT TOTAL **	4	541.50	0.00	541.50	03/05/20	76818
1069171		5701	FEDEX						
			9874-0229-6 shipping	6-932-05459	9.34	0.00	9.34		
			** PAYMENT TOTAL **	1	9.34	0.00	9.34	03/05/20	76818
1069172		5762	A.D. MORGAN CORPORATION						
			Parking Garage Project #17	3832-17	544,277.06	0.00	544,277.06		
			** PAYMENT TOTAL **	1	544,277.06	0.00	544,277.06	03/05/20	76818
1069173		5875	VULCAN, INC.						
			U-Post 0704976	352234	5,843.50	0.00	5,843.50		
			** PAYMENT TOTAL **	1	5,843.50	0.00	5,843.50	03/05/20	76818
1069174		5942	SPRINT						
			720668024 1/19-2/18	720668024-209	42.24	0.00	42.24		
			** PAYMENT TOTAL **	1	42.24	0.00	42.24	03/05/20	76818
1069175		7045	FERGUSON ENTERPRISES, INC						
			ODP for Storm, Forcemain,55432	1789120	737.23	0.00	737.23		
			ODP for Storm, Forcemain 55432	1790367	284.79	0.00	284.79		
			** PAYMENT TOTAL **	2	1,022.02	0.00	1,022.02	03/05/20	76818
1069176		7144	CINTAS CORPORATION NO 2						

Batch: 0 Period: 03/05/20

Payment Number	HP/ VD	Vendor Number	Name/ Description	Invoice/ Items	Gross Amount	Discounts/ Deductions	Net Pay	Paid Date	Batch Number
			BUSHNELL FIRE MATS 12704907	4042638079	7.56	0.00	7.56		
			SCSC MATS 12707180	4043521579	12.96	0.00	12.96		
			PW UNIFORMS 12700330	4043521619	33.20	0.00	33.20		
			BELV LIB MATS 12707253	4043521727	7.44	0.00	7.44		
			OXFORD FIRE MATS 12703293	4043521730	10.80	0.00	10.80		
			AN SVCS UNIFORMS 12700673	4043763460	10.68	0.00	10.68		
			AN CONT UNIFORMS 12703984	4043763586	59.01	0.00	59.01		
			LP LIB MATS 12700601	4043763615	9.06	0.00	9.06		
			LP FIRE STA MATS 12704752	4043763621	6.48	0.00	6.48		
			WEBSTER LIB MATS 12700498	4043896639	5.28	0.00	5.28		
			WEBSTER FIRE MATS 12704860	4043896684	4.32	0.00	4.32		
			FAC/PARKS UNIFORMS 12700245	4043896711	69.80	0.00	69.80		
			BUSHNELL FIRE MATS 12704907	4043896737	7.56	0.00	7.56		
			BUSHNELL LIB MATS 12700160	4043896772	6.22	0.00	6.22		
			TAX COLL MATS 12704367	4043896779	7.92	0.00	7.92		
			PW UNIFORMS 12700311	4043896800	72.46	0.00	72.46		
			PROP APPR MATS 12707183	4043896820	7.92	0.00	7.92		
			PW MATS 12700425	4043896835	10.14	0.00	10.14		
			PW UNIFORMS 12704444	4043896847	114.31	0.00	114.31		
			COURTHOUSE MATS 12700216	4043896913	11.16	0.00	11.16		
			BUSHNELL FIRE MATS 12701852	4043896924	8.64	0.00	8.64		
			BUSHNELL FIRE MATS 12701785	4043896962	6.48	0.00	6.48		
			WW FIRE MATS 12703237	4043961138	4.32	0.00	4.32		
			** PAYMENT TOTAL **	23	493.72	0.00	493.72	03/05/20	76818
1069177		7176	AMAZON						
			HYGROMETER AVC10S7UXODM9	1VCH-JCVM-MXWW	308.97	0.00	308.97		
			** PAYMENT TOTAL **	1	308.97	0.00	308.97	03/05/20	76818
1069178		7408	THE VILLAGES TECH SOLUTIONS						
			Closed Banner Web Programming	18445	30.00	0.00	30.00		
			QOGNIFY RENEWAL	18512	3,851.43	0.00	3,851.43		
			Economic Development Websites	18562	450.00	0.00	225.00		
			Economic Development Websites	18562	450.00	0.00	225.00		
			** PAYMENT TOTAL **	4	4,331.43	0.00	4,331.43	03/05/20	76818
1069179		7431	GOLLAHON FINANCIAL SVCS,INC						
			CAP IMPROV REV&REF BOND S2020	GOLLAHON020720	29,711.02	0.00	29,711.02		
			** PAYMENT TOTAL **	1	29,711.02	0.00	29,711.02	03/05/20	76818
1069180		7563	SKYLINE ELEVATOR						
			R&R New Guide Rollers in Eleva	209663	623.00	0.00	623.00		
			** PAYMENT TOTAL **	1	623.00	0.00	623.00	03/05/20	76818
1069181		7603	SUBURBAN PROPANE-1159						

Batch: 0 Period: 03/05/20

Payment Number	HP/ VD	Vendor Number	Name/ Description	Invoice/ Items	Gross Amount	Discounts/ Deductions	Net Pay	Paid Date	Batch Number
			1159-187684 PROPANE	1159-187684021220	1.92-	0.00	1.92-		
			1159-187684-001 PROPANE	1159-201280	182.37	0.00	182.37		
			1159-116724-013 PROPANE	1159-201426	110.84	0.00	110.84		
			** PAYMENT TOTAL **	3	291.29	0.00	291.29	03/05/20	76818
1069182		7637	SYMETRA LIFE						
			Spec Loss Ins MAR 16010163000	MAR202016010163000	45,097.17	0.00	45,097.17		
			** PAYMENT TOTAL **	1	45,097.17	0.00	45,097.17	03/05/20	76818
1069183		7641	WASTE CONNECTIONS OF FLORIDA, INC						
			Hauling Services 6473	76504	300.00	0.00	300.00		
			Hauling Services 6473	76505	1,775.00	0.00	1,775.00		
			** PAYMENT TOTAL **	2	2,075.00	0.00	2,075.00	03/05/20	76818
1069184		7650	MTM TRANSIT LLC						
			Transit Services Operator FEB	03022020	93,019.72	0.00	93,019.72		
			** PAYMENT TOTAL **	1	93,019.72	0.00	93,019.72	03/05/20	76818
1069185		7651	BRIGHTVIEW LANDSCAPES, LLC						
			Landscape Cont- 16618198 MAR	6736051	58,920.17	0.00	58,920.17		
			** PAYMENT TOTAL **	1	58,920.17	0.00	58,920.17	03/05/20	76818
1069186		7652	AIR MECHANICAL & SERVICE CORP						
			Rep Rooftop Unit SUMTERCO	97446	190.00	0.00	190.00		
			Rep Rooftop Unit SUMTERCO	97693	317.50	0.00	317.50		
			HVAC Contract -SCSC SUMTERCO	FM21494	2,207.92	0.00	2,207.92		
			HVAC Cont DET CTR SUMTERCO	FM21495	5,352.08	0.00	5,352.08		
			** PAYMENT TOTAL **	4	8,067.50	0.00	8,067.50	03/05/20	76818
1069187		7823	ELIZABETH M. BERTELO						
			Public Def IT 2/17-2/28	EB022820	1,307.69	0.00	1,307.69		
			** PAYMENT TOTAL **	1	1,307.69	0.00	1,307.69	03/05/20	76818
1069188		7826	DELTA DENTAL INSURANCE COMPANY						
			Dental ASO Fees 10-1605700000	BE003828016A	2,553.92	0.00	2,553.92		
			** PAYMENT TOTAL **	1	2,553.92	0.00	2,553.92	03/05/20	76818
1069189		7833	THE LUNZ GROUP						
			1902.07 PW ANNEX ADDITION	184616	6,538.42	0.00	6,538.42		
			** PAYMENT TOTAL **	1	6,538.42	0.00	6,538.42	03/05/20	76818
1069190		7856	STAPLES ADVANTAGE						
			Wireless Scanner ATL1806898	3437657485	239.99	0.00	239.99		
			** PAYMENT TOTAL **	1	239.99	0.00	239.99	03/05/20	76818
1069191		7915	THE VILLAGES ENTERTAINMENT OFFICE						
			Downtown Entertainment JAN	20200131	24,000.00	0.00	24,000.00		
			** PAYMENT TOTAL **	1	24,000.00	0.00	24,000.00	03/05/20	76818
1069192		7919	HOLLAND & KNIGHT, LLP						
			CAP IMPROV REF REV BOND S2020	5962626	31,000.00	0.00	31,000.00		

Batch: 0 Period: 03/05/20

Payment Number	HP/ VD	Vendor Number	Name/ Description	Invoice/ Items	Gross Amount	Discounts/ Deductions	Net Pay	Paid Date	Batch Number
			** PAYMENT TOTAL **	1	31,000.00	0.00	31,000.00	03/05/20	76818
1069193		7979	HEART OF FLORIDA ENVIRONMENTAL						
			Hauling Services 34	2317	2,304.81	0.00	2,304.81		
			** PAYMENT TOTAL **	1	2,304.81	0.00	2,304.81	03/05/20	76818
1069194		8001	GARRETT JOHNSON						
			1/26-29 2015 MC TRAINING	1/26-292015	3.00	0.00	3.00		
			** PAYMENT TOTAL **	1	3.00	0.00	3.00	03/05/20	76818
1069195		8020	LIBRARY SYSTEMS & SERVICES, LLC						
			Library Sys &Services FEB	INV2820	247,359.25	0.00	247,359.25		
			** PAYMENT TOTAL **	1	247,359.25	0.00	247,359.25	03/05/20	76818
1069196		8026	LTS AND COMPANY, INC						
			Signs and Back Plates	2367	5,644.00	0.00	5,644.00		
			** PAYMENT TOTAL **	1	5,644.00	0.00	5,644.00	03/05/20	76818
1069197		8231	TECH 24						
			SUMTERCOZ046989 TRUCK FEE	5716178	273.97	0.00	273.97		
			** PAYMENT TOTAL **	1	273.97	0.00	273.97	03/05/20	76818
1069198		8343	FIRST VEHICLE SERVICES, INC						
			Maint & Repair Cont 1150741	11654590	85,135.00	0.00	85,135.00		
			Maint & Repair Cont 1150741	11654608	21,148.85	0.00	21,148.85		
			** PAYMENT TOTAL **	2	106,283.85	0.00	106,283.85	03/05/20	76818
1069199		8352	LAMBERT VET SUPPLY						
			NOBIVAC CANINE LVSC00000452458	LVSI02111888	272.23	0.00	272.23		
			** PAYMENT TOTAL **	1	272.23	0.00	272.23	03/05/20	76818
1069200		8379	JOHN MCINTYRE MAINTENANCE						
			Safeguard Soft Wash Cow Palace	WO-14495	4,284.29	0.00	4,284.29		
			** PAYMENT TOTAL **	1	4,284.29	0.00	4,284.29	03/05/20	76818
1069201		8452	FIKES WHOLESALE, INC						
			ATM FEB Lease CU10556	CIN-124541	75.00	0.00	75.00		
			** PAYMENT TOTAL **	1	75.00	0.00	75.00	03/05/20	76818
1069202		8456	BREANNE SIDWELL						
			4/10-13 2019 FDIC HONOR GUARD	BSIDWELL041319	101.00	0.00	101.00		
			** PAYMENT TOTAL **	1	101.00	0.00	101.00	03/05/20	76818
1069203		8468	CIT BANK, N.A.						
			Lease Charges -900-0302200-000	34972556	197.74	0.00	197.74		
			Lease Charges 900-0258312-000	34980518	147.11	0.00	147.11		
			Lease Charges -900-0258312-027	34980519	212.97	0.00	212.97		
			Lease Charges -900-0258312-018	35022038	319.52	0.00	319.52		
			Lease Charges -900-0258312-001	35022039	147.11	0.00	147.11		
			** PAYMENT TOTAL **	5	1,024.45	0.00	1,024.45	03/05/20	76818
1069204		8538	SHENANDOAH GENERAL CONSTRUCTION COMPANY						

Batch: 0 Period: 03/05/20

Payment Number	HP/ VD	Vendor Number	Name/ Description	Invoice/ Items	Gross Amount	Discounts/ Deductions	Net Pay	Paid Date	Batch Number
			Sumter Co Pipe Assess 19436	83997	137,837.00	0.00	137,837.00		
			** PAYMENT TOTAL **	1	137,837.00	0.00	137,837.00	03/05/20	76818
1069205		8567	KATHLEEN ELIZABETH GLOVER						
			Prog Spec II 2/17-28	KATHYGLOVER02282020	1,388.80	0.00	1,388.80		
			** PAYMENT TOTAL **	1	1,388.80	0.00	1,388.80	03/05/20	76818
1069206		8645	SARAH BESSLER						
			7/7-13 2019 CERT CRUELTY INV	SBESSLER071319	216.00	0.00	216.00		
			7/21-23 2019 FACA CHEM IMMOB	SBESSLER072319	60.00	0.00	60.00		
			** PAYMENT TOTAL **	2	276.00	0.00	276.00	03/05/20	76818
1069207		8770	TECO						
			221004648699 1/23-2/20	221004648699022020	38.16	0.00	38.16		
			** PAYMENT TOTAL **	1	38.16	0.00	38.16	03/05/20	76818
1069208		8810	TARKETTT USA, INC						
			Carpet/Install PUB DEF 161899	649116-M	3,189.30	0.00	3,189.30		
			** PAYMENT TOTAL **	1	3,189.30	0.00	3,189.30	03/05/20	76818
1069209		8835	MSSI INC						
			Modular Cells/Mezzanine Stairs	100	439,000.00	0.00	439,000.00		
			** PAYMENT TOTAL **	1	439,000.00	0.00	439,000.00	03/05/20	76818
1069210		8896	FIRST IMPRESSIONS PRINTING						
			DISASTER PLANNING GUIDE	80863	780.18	0.00	780.18		
			** PAYMENT TOTAL **	1	780.18	0.00	780.18	03/05/20	76818
1069211		8903	SIDNEY SMITH						
			Software Consulting Services	1161	925.00	0.00	925.00		
			** PAYMENT TOTAL **	1	925.00	0.00	925.00	03/05/20	76818
1069212		8910	LEXISNEXIS RISK DATA MANAGEMENT INC						
			LexisNexis Accurint 1723577	1723577-20200131	115.20	0.00	115.20		
			** PAYMENT TOTAL **	1	115.20	0.00	115.20	03/05/20	76818
3317		79	MY FLORIDA COUNTY						
			2/28/20 PAYROLL DEDUCTION	2/28/20PAYDED	1,410.78	0.00	1,410.78		
	HP		** PAYMENT TOTAL **	1	1,410.78	0.00	1,410.78	02/28/20	76739
3318		49	MASS MUTUAL						
			2/28/20 PAYROLL DEDUCTION	2/28/20PAYDED	5,458.36	0.00	5,458.36		
	HP		** PAYMENT TOTAL **	1	5,458.36	0.00	5,458.36	02/28/20	76739
3320		8349	EMPLOYEE BENEFITS CORPORATION						
			FSA Claims 2/25/2020	2819160	171.41	0.00	171.41		
	HP		** PAYMENT TOTAL **	1	171.41	0.00	171.41	02/28/20	76764
3321		8349	EMPLOYEE BENEFITS CORPORATION						
			FSA Claims 2/19-25/2020	2818213	520.79	0.00	520.79		
	HP		** PAYMENT TOTAL **	1	520.79	0.00	520.79	02/27/20	76765
3322		8349	EMPLOYEE BENEFITS CORPORATION						

Batch: 0 Period: 03/05/20

Payment Number	HP/ VD	Vendor Number	Name/ Description	Invoice/ Items	Gross Amount	Discounts/ Deductions	Net Pay	Paid Date	Batch Number
			FSA/Cobra Admin fee FEB 2020	2807383	803.92	0.00	803.92		
	HP		** PAYMENT TOTAL **	1	803.92	0.00	803.92	02/28/20	76766
3323		64	BLUE CROSS BLUE SHIELD OF FLA.						
			60668 BCBS JAN2020 CLAIMS	1000052457	768,338.97	0.00	768,338.97		
	HP		** PAYMENT TOTAL **	1	768,338.97	0.00	768,338.97	02/28/20	76767
3324		8349	EMPLOYEE BENEFITS CORPORATION						
			FSA Claims 2/25-27/2020	2820203	832.54	0.00	832.54		
	HP		** PAYMENT TOTAL **	1	832.54	0.00	832.54	03/02/20	76773
3325		7826	DELTA DENTAL INSURANCE COMPANY						
			DENTAL ACH3/2/2020 2/20-26	BE003828016C	7,095.70	0.00	7,095.70		
	HP		** PAYMENT TOTAL **	1	7,095.70	0.00	7,095.70	03/02/20	76774
3326		56	FLA RETIREMENT SYSTEM						
			FEBRUARY 2020 EFT PMT	FEB2020EFTPMT	182,772.12	0.00	182,772.12		
	HP		** PAYMENT TOTAL **	1	182,772.12	0.00	182,772.12	03/04/20	76780
3327		8349	EMPLOYEE BENEFITS CORPORATION						
			FSA Claims 2/26-28/2020	2822025	2,123.91	0.00	2,123.91		
	HP		** PAYMENT TOTAL **	1	2,123.91	0.00	2,123.91	03/03/20	76791
3328		8349	EMPLOYEE BENEFITS CORPORATION						
			FSA Claims 1/1-3/2/2020	2823213	946.56	0.00	946.56		
	HP		** PAYMENT TOTAL **	1	946.56	0.00	946.56	03/04/20	76816
BANK TOTALS			PAYMENTS: 94 VOIDS: 0	191	5,971,574.58	0.00	5,971,574.58		

Batch: 0 Period: 03/05/20

Payment Number	HP/ VD	Vendor Number	Name/ Description		Invoice/ Items	Gross Amount	Discounts/ Deductions	Net Pay	Paid Date	Batch Number
REGISTER TOTALS		PAYMENTS: 94		VOIDS: 0	191	5,971,574.58	0.00	5,971,574.58		
PAYMENT TYPE TOTALS										
CHK		PAYMENTS: 83		VOIDS: 0		5,001,099.52	0.00	5,001,099.52		
EFT		PAYMENTS: 11		VOIDS: 0		970,475.06	0.00	970,475.06		

Batch: 0 Period: 03/12/20

Payment Number	HP/ VD	Vendor Number	Name/ Description	Invoice/ Items	Gross Amount	Discounts/ Deductions	Net Pay	Paid Date	Batch Number
			FOR BANK ACCOUNT:2 SUNTRUST BANK, NATURE COAST		PAYABLES CLEARING ACCOUNT				
1069213		1	MARCO POLO BUILDERS						
			REFUND OF ESCROW	030520MPB	200.00	0.00	200.00		
			** PAYMENT TOTAL **	1	200.00	0.00	200.00	03/12/20	76885
1069214		1	JOHN DECOSTA						
			RETURNED LIBRARY ITEM	DECOSTAJ030320	19.99	0.00	19.99		
			** PAYMENT TOTAL **	1	19.99	0.00	19.99	03/12/20	76885
1069215		76	ING RELIASTAR LIFE INS CO						
			ING:6065:425:03/07/20	6065:318	1,169.18	0.00	1,169.18		
			** PAYMENT TOTAL **	1	1,169.18	0.00	1,169.18	03/12/20	76885
1069216		80	NYS CHILD SUPPORT						
			CHILD SUP:6065:518:03/07/20	6065:302	274.00	0.00	274.00		
			** PAYMENT TOTAL **	1	274.00	0.00	274.00	03/12/20	76885
1069217		380	CENTRAL TESTING LABORATORY, INC						
			CR 470 Pvmnt rehab 1984185.200	75706	2,300.00	0.00	2,300.00		
			CR 476 Pavement rehab project	75707	2,300.00	0.00	2,300.00		
			** PAYMENT TOTAL **	2	4,600.00	0.00	4,600.00	03/12/20	76885
1069218		402	CITY OF BUSHNELL						
			100819-0 1/13-2/17	100819-0021720	117.73	0.00	117.73		
			11900-0 1/14-2/17	11900-0021720	625.03	0.00	625.03		
			1190500-0 1/13-2/17	1190500-0021720	202.43	0.00	202.43		
			1242700-0 1/13-2/17	1242700-0021720	47.73	0.00	47.73		
			133400-0 1/13-2/17	133400-0021720	363.29	0.00	363.29		
			14041688-1 1/14-2/18	14041688-1021820	239.12	0.00	239.12		
			142400-0 1/14-2/18	142400-0021820	155.84	0.00	155.84		
			142500-0 1/14-2/18	142500-0021820	433.67	0.00	433.67		
			142700-0 1/14-2/18	142700-0021820	103.42	0.00	103.42		
			143000-0 1/14-2/18	143000-0021820	156.73	0.00	156.73		
			143400-0 1/14-2/18	143400-0021820	51.67	0.00	51.67		
			143500-0 1/14-2/18	143500-0021820	1,134.42	0.00	1,134.42		
			148000-0 1/14-2/18	148000-0021820	2,306.02	0.00	2,306.02		
			148300-0 1/14-2/18	148300-0021820	45.92	0.00	45.92		
			148700-0 1/14-2/18	148700-0021820	507.70	0.00	507.70		
			148900-0 1/14-2/18	148900-0021820	14.14	0.00	14.14		
			149500-0 1/14-2/18	149500-0021820	353.22	0.00	353.22		
			156450-1 1/14-2/18	156450-1021820	621.86	0.00	621.86		
			157100-0 1/14-2/18	157100-0021820	299.81	0.00	299.81		
			157500-0 1/14-2/18	157500-0021820	255.69	0.00	255.69		
			1576400-0 1/13-2/17	1576400-0021720	831.88	0.00	831.88		
			163800-0 1/14-2/18	163800-0021820	3,067.38	0.00	3,067.38		

Batch: 0 Period: 03/12/20

Payment Number	HP/ VD	Vendor Number	Name/ Description	Invoice/ Items	Gross Amount	Discounts/ Deductions	Net Pay	Paid Date	Batch Number
			163900-0 1/14-2/18	163900-0021820	8,910.51	0.00	8,910.51		
			164300-0 1/14-2/18	164300-0021820	2,467.69	0.00	2,467.69		
			164400-0 1/14-2/18	164400-0021820	8,000.66	0.00	8,000.66		
			20113241-2 1/14-2/18	20113241-2021820	113.59	0.00	113.59		
			20113245-0 1/14-2/18	20113245-0021820	127.96	0.00	127.96		
			20113264-1 1/13-2/17	20113264-1021720	175.21	0.00	175.21		
			20113293-1 1/14-2/18	20113293-1021820	3,013.25	0.00	3,013.25		
			20113312-0 1/14-2/18	20113312-0021820	222.76	0.00	222.76		
			20113353-0 1/14-2/18	20113353-0021820	684.68	0.00	684.68		
			82100-3 1/14-2/18	82100-3021820	9,516.22	0.00	9,516.22		
			82150-0 1/14-2/18	82150-0021820	9,115.55	0.00	9,115.55		
			85600-7 1/14-2/18	85600-7021820	329.84	0.00	329.84		
			** PAYMENT TOTAL **	34	54,612.62	0.00	54,612.62	03/12/20	76885
1069219		406	CITY OF CENTER HILL						
			2-185.2 3/1/20	2-185-2022820	27.00	0.00	27.00		
			2-185 3/1/20	2-185022820	57.00	0.00	57.00		
			** PAYMENT TOTAL **	2	84.00	0.00	84.00	03/12/20	76885
1069220		409	CITY OF WEBSTER						
			473-0 2/1-28	473-0022820	2,672.04	0.00	2,672.04		
			474-0 2/1-28	474-0022820	812.70	0.00	812.70		
			534-0 2/1-28	534-0022820	338.62	0.00	338.62		
			535-0 2/1-28	535-0022820	1,506.18	0.00	1,506.18		
			537-0 2/1-28	537-0022820	233.07	0.00	233.07		
			** PAYMENT TOTAL **	5	5,562.61	0.00	5,562.61	03/12/20	76885
1069221		463	CONTROL SPECIALISTS						
			SERVICE CALLS FEB SUMTER	2002-043	5,751.00	0.00	5,751.00		
			TRAFFIC PARTS FOR FEB SUMTER	2002-044	947.24	0.00	947.24		
			TRAFFIC SIG MAINT MAR SUMTER	2003-011	11,030.00	0.00	11,030.00		
			** PAYMENT TOTAL **	3	17,728.24	0.00	17,728.24	03/12/20	76885
1069222		519	THE VILLAGES DAILY SUN						
			01116977 VAB 3/1/20	932785	28.50	0.00	28.50		
			01116977 LEG NOT PUB HRG 2/28	933445	131.75	0.00	131.75		
			01116977 NOT PUB HRG 3/2	934081	80.75	0.00	80.75		
			** PAYMENT TOTAL **	3	241.00	0.00	241.00	03/12/20	76885
1069223		615	ERNIE MORRIS ENTERPRISES						
			Scott Essential Plus+ 10244	418933-0	365.90	0.00	365.90		
			Copy Paper 10244	418948-0	148.70	0.00	148.70		
			** PAYMENT TOTAL **	2	514.60	0.00	514.60	03/12/20	76885
1069224		680	DUKE ENERGY						
			00451 15339 1/31-3/3	0045115339030320	4,714.66	0.00	4,714.66		

Batch: 0 Period: 03/12/20

Payment Number	HP/ VD	Vendor Number	Name/ Description	Invoice/ Items	Gross Amount	Discounts/ Deductions	Net Pay	Paid Date	Batch Number
			09050 56313 1/28-2/27	0905056313022720	291.16	0.00	291.16		
			27313 67269 1/28-2/27	2731367269022720	23.72	0.00	23.72		
			32164 30468 1/28-2/27	3216430468022720	693.62	0.00	693.62		
			38631 63270 1/29-2/28	3863163270022820	40.56	0.00	40.56		
			42588 04030 1/29-2/28	4258804030022820	51.94	0.00	51.94		
			63019 14390 1/31-3/3	6301914390030320	2,911.98	0.00	2,911.98		
			67524 74272 1/30-3/2	6752474272030220	427.08	0.00	427.08		
			89667 30252 1/28-2/27	8966730252022720	135.79	0.00	135.79		
			96536 03063 1/28-2/27	9653603063022720	472.18	0.00	472.18		
			** PAYMENT TOTAL **	10	9,762.69	0.00	9,762.69	03/12/20	76885
1069225		780	W W GRAINGER						
			Mop Handles&Mop Head 829848217	9459887429	82.05	0.00	82.05		
			** PAYMENT TOTAL **	1	82.05	0.00	82.05	03/12/20	76885
1069226		816	TETRA TECH INC						
			117-7348009 2018MINE&LANDFILL	51561034	1,255.20	0.00	1,255.20		
			117-7348009 018 MINE&LANDFILL	51561035	1,255.20	0.00	1,255.20		
			** PAYMENT TOTAL **	2	2,510.40	0.00	2,510.40	03/12/20	76885
1069227		991	LAKE PANASOFFKEE WATER ASSN						
			10454000 1/30-2/28	10454000022820	32.25	0.00	32.25		
			10455000 1/30-2/28	10455000022820	20.00	0.00	20.00		
			10456000 1/30-2/28	10456000022820	3.00	0.00	3.00		
			10457000 1/30-2/28	10457000022820	52.90	0.00	52.90		
			10457100 1/30-2/28	10457100022820	3.00	0.00	3.00		
			10457200 1/30-2/28	10457200022820	22.00	0.00	22.00		
			10458000 1/30-2/28	10458000022820	112.20	0.00	112.20		
			10473100 1/30-2/28	10473100022820	22.00	0.00	22.00		
			** PAYMENT TOTAL **	8	267.35	0.00	267.35	03/12/20	76885
1069228		1231	OFFICE DEPOT INC						
			APC Back - UPS 29275315	446812756001	234.80	0.00	234.80		
			** PAYMENT TOTAL **	1	234.80	0.00	234.80	03/12/20	76885
1069229		1300	PITNEY BOWES GLOBAL FINANCIAL						
			Lease Chgs - SOE 0016113129	3103796551	183.06	0.00	183.06		
			** PAYMENT TOTAL **	1	183.06	0.00	183.06	03/12/20	76885
1069230		1328	PROPERTY APPRAISER						
			APR-JUN 2020 QTR BUDGET	APR-JUN2020	428,409.25	0.00	428,409.25		
			** PAYMENT TOTAL **	1	428,409.25	0.00	428,409.25	03/12/20	76885
1069231		1563	SUMTER COUNTY HEALTH DEPT						
			Employee Vaccinations	013020	433.78	0.00	433.78		
			MAR 2020 MONTHLY TRANSFER	MAR2020	108,333.33	0.00	108,333.33		
			** PAYMENT TOTAL **	2	108,767.11	0.00	108,767.11	03/12/20	76885

Batch: 0 Period: 03/12/20

Payment Number	HP/ VD	Vendor Number	Name/ Description	Invoice/ Items	Gross Amount	Discounts/ Deductions	Net Pay	Paid Date	Batch Number
1069232		1565	SECO ENERGY						
			6510050010 2/3-3/4	6510050010030420	34.05	0.00	34.05		
			6511105010 2/3-3/4	6511105010030420	35.64	0.00	35.64		
			6820760010 1/24-2/25	6820760010022520	36.34	0.00	36.34		
			6821150010 1/24-2/25	6821150010022520	138.45	0.00	138.45		
			8010598700 12/23-1/24	8010598700012420	49.29	0.00	49.29		
			8010598700 1/24-2/25	8010598700022520	49.29	0.00	49.29		
			8012656201 1/24-2/25	8012656201022520	49.75	0.00	49.75		
			8025852001 1/24-2/25	8025852001022520	46.81	0.00	46.81		
			9600604901 1/27-2/26	9600604901022620	293.63	0.00	293.63		
			9600613101 2/3-3/4	9600613101030420	37.33	0.00	37.33		
			9600628701 1/24-2/25	9600628701022520	347.25	0.00	347.25		
			9600875203 2/3-3/4	9600875203030420	77.33	0.00	77.33		
			9600875302 2/3-3/4	9600875302030420	307.42	0.00	307.42		
			9600875402 2/3-3/4	9600875402030420	57.71	0.00	57.71		
			9600875502 2/3-3/4	9600875502030420	138.50	0.00	138.50		
			9602064902 2/3-3/4	9602064902030420	563.68	0.00	563.68		
			9602621101 2/3-3/4	9602621101030420	34.90	0.00	34.90		
			** PAYMENT TOTAL **	17	2,297.37	0.00	2,297.37	03/12/20	76885
1069233		1650	TRI-CO COMMUNICATIONS INC.						
			Radio install and removal 1496	119005287-1	202.70	0.00	202.70		
			Radio Subscriber Svc 1496	80002283	420.50	0.00	420.50		
			Radio Subscriber Svc 1496	80002284	10,695.75	0.00	10,695.75		
			Radio Subscriber Svc 1496	80002285	1,096.80	0.00	1,096.80		
			Radio Subscriber Svc 1496	80002286	252.00	0.00	252.00		
			** PAYMENT TOTAL **	5	12,667.75	0.00	12,667.75	03/12/20	76885
1069234		1712	WASTE MANAGEMENT INC OF FL						
			18-00289-93005 3/1-31	0389483-2227-6	87.16	0.00	87.16		
			17-94208-53006 2/1-29	0390956-2227-8	2,126.32	0.00	2,126.32		
			** PAYMENT TOTAL **	2	2,213.48	0.00	2,213.48	03/12/20	76885
1069235		1726	THOMSON REUTERS WEST						
			West Law Subscrip 1003309020	841918812	1,313.13	0.00	1,313.13		
			** PAYMENT TOTAL **	1	1,313.13	0.00	1,313.13	03/12/20	76885
1069236		1987	PRIDE ENTERPRISES						
			Cleaning Supplies 233557	E1122422	395.20	0.00	395.20		
			** PAYMENT TOTAL **	1	395.20	0.00	395.20	03/12/20	76885
1069237		2013	A-LINE FIRE & SAFETY INC						
			Remove and Add Locks/Hardware	57668E	6,369.70	0.00	6,369.70		
			** PAYMENT TOTAL **	1	6,369.70	0.00	6,369.70	03/12/20	76885
1069238		2224	VILLAGES PUBLIC SAFETY DEPT						

Batch: 0 Period: 03/12/20

Payment Number	HP/ VD	Vendor Number	Name/ Description	Invoice/ Items	Gross Amount	Discounts/ Deductions	Net Pay	Paid Date	Batch Number
			MARCH 2020 VLGS FIRE FUNDING	MARCH2020	1,256,802.83	0.00	1,256,802.83		
			** PAYMENT TOTAL **	1	1,256,802.83	0.00	1,256,802.83	03/12/20	76885
1069239		2237	THE VILLAGES OF LK-SUMTER INC						
			CR468, US301 TO CR505 DRAW#25	020-RW	1,124,521.41	0.00	1,124,521.41		
			** PAYMENT TOTAL **	1	1,124,521.41	0.00	1,124,521.41	03/12/20	76885
1069240		2252	CAPITOL SOLUTIONS, LLC						
			Lobbyist Services MARCH	CS032020	5,500.00	0.00	5,500.00		
			** PAYMENT TOTAL **	1	5,500.00	0.00	5,500.00	03/12/20	76885
1069241		2259	OVERHEAD DOOR COMPANY OF OCALA						
			Rep Overhead Doors at STA32	13186	165.00	0.00	165.00		
			Repair Overhead Doors STA11	13193	165.00	0.00	165.00		
			Repair Overhead Doors STA 32	13194	165.00	0.00	165.00		
			Repair Overhead Door STA 21	13244	1,985.00	0.00	1,985.00		
			** PAYMENT TOTAL **	4	2,480.00	0.00	2,480.00	03/12/20	76885
1069242		2272	SUMTER RECYCLING & SOLID WASTE						
			Const and Demolition 42	508	2,098.80	0.00	2,098.80		
			Const&Demolition 102	513	757.90	0.00	757.90		
			** PAYMENT TOTAL **	2	2,856.70	0.00	2,856.70	03/12/20	76885
1069243		2311	GALLS, LLC						
			Firefighters Uniforms 5420981	015147697	13.60	0.00	13.60		
			** PAYMENT TOTAL **	1	13.60	0.00	13.60	03/12/20	76885
1069244		3760	VFIS						
			FY 19/20 Fire Svcs Dept C40717	86132118	20,314.00	0.00	20,314.00		
			** PAYMENT TOTAL **	1	20,314.00	0.00	20,314.00	03/12/20	76885
1069245		3921	TAMPA BAY TRANE						
			Maint on Chillers -SUM000 PSC	237272	932.33	0.00	932.33		
			Maint on Chillers -SUM000 JUD	246000	452.00	0.00	452.00		
			Maint Chillers -SUM000 PSC	246001	932.33	0.00	932.33		
			** PAYMENT TOTAL **	3	2,316.66	0.00	2,316.66	03/12/20	76885
1069246		3983	IAFC MEMBERSHIP						
			R.HANSON MEMBERSHIP	000060573	225.00	0.00	225.00		
			** PAYMENT TOTAL **	1	225.00	0.00	225.00	03/12/20	76885
1069247		4167	C.W. ROBERTS CONTRACTING, INC						
			BVB 300'S OF LK MIONA-N C44 #2	1511562PAYAPP2	958,604.25	0.00	958,604.25		
			Hot Mix Asphalt 14027	74730	1,347.48	0.00	1,347.48		
			Hot Mix Asphalt 14027	74880	300.00	0.00	300.00		
			Hot Mix Asphalt 14027	74881	2,055.21	0.00	2,055.21		
			** PAYMENT TOTAL **	4	962,306.94	0.00	962,306.94	03/12/20	76885
1069248		4353	KIMLEY-HORN AND ASSOC, INC						
			142109120.3 CR 615 CANAL SURVE	15707629	11,000.00	0.00	11,000.00		

Batch: 0 Period: 03/12/20

Payment Number	HP/ VD	Vendor Number	Name/ Description	Invoice/ Items	Gross Amount	Discounts/ Deductions	Net Pay	Paid Date	Batch Number
			** PAYMENT TOTAL **	1	11,000.00	0.00	11,000.00	03/12/20	76885
1069249		5021	PAGE DIXON CHANDLER SMITH, LLC						
			PLAN REV & INSP FEB	11010	197,637.50	0.00	197,637.50		
			FIRE PLAN REV&INSP FEB	11011	44,362.50	0.00	44,362.50		
			** PAYMENT TOTAL **	2	242,000.00	0.00	242,000.00	03/12/20	76885
1069250		5186	CENTURYLINK						
			311401421 3/1/20	311401421030120	236.76	0.00	236.76		
			311903986 3/4/20	311903986030420	1,185.53	0.00	1,185.53		
			312279271 3/1/20	312279271030120	6,232.55	0.00	6,232.55		
			320291725 3/2/20	320291725030220	816.08	0.00	816.08		
			** PAYMENT TOTAL **	4	8,470.92	0.00	8,470.92	03/12/20	76885
1069251		5222	KYOCERA DOCUMENT SOLUTIONS						
			Copy Chgs CONT1695-01	55V1164644	2,291.78	0.00	2,291.78		
			Copy Chgs -CONT5214-01 SC22	55V1164645	611.18	0.00	611.18		
			Copy Chgs CONT1548-01 SC22	55V1164646	1,080.22	0.00	1,080.22		
			Copy Chgs CONT 4923-01 SC22	55V1164655	81.42	0.00	81.42		
			Copy Chgs CONT4924-01 SC22	55V1164656	186.09	0.00	186.09		
			Copy Chgs CONT 4925-01 SC22	55V1164657	39.02	0.00	39.02		
			Copy Chgs CONT1046-01 SC22	55V1164658	268.18	0.00	268.18		
			Copy Chgs CONT 1176-01 SC22	55V1164659	97.47	0.00	97.47		
			Copy Chgs -CONT1205-01 SC22	55V1164660	76.73	0.00	76.73		
			Copy Chgs CONT 1245-01 SC22	55V1164661	316.57	0.00	316.57		
			Copy Chgs CONT 1974-01 SC22	55V1164662	36.47	0.00	36.47		
			Copy Chgs CONT 5132-01 SC22	55V1164663	52.92	0.00	52.92		
			Copy Chgs CONT 1394-01 SC22	55V1164664	328.37	0.00	328.37		
			** PAYMENT TOTAL **	13	5,466.42	0.00	5,466.42	03/12/20	76885
1069252		5461	VERIZON WIRELESS						
			421672038-00004 1/24-2/23	9849010162	115.28	0.00	115.28		
			** PAYMENT TOTAL **	1	115.28	0.00	115.28	03/12/20	76885
1069253		5659	AT&T MOBILITY						
			287286659497x02082020	287286659497X020820	510.04	0.00	374.39		
			287286659497x02082020	287286659497X020820	510.04	0.00	135.65		
			287286659497 1/1-31	287286659497X020820A	1,499.00	0.00	1,499.00		
			** PAYMENT TOTAL **	3	2,009.04	0.00	2,009.04	03/12/20	76885
1069254		5701	FEDEX						
			9874-0229-6 SHIPPING	6-945-59676	7.60	0.00	7.60		
			** PAYMENT TOTAL **	1	7.60	0.00	7.60	03/12/20	76885
1069255		5742	ADS WASTE HOLDINGS, INC						
			PARKS Port-O-Let P8042372	P80000961062	191.59	0.00	191.59		
			PARKS Port-O-Let P8042372	P80000979214	313.41	0.00	313.41		

Batch: 0 Period: 03/12/20

Payment Number	HP/ VD	Vendor Number	Name/ Description	Invoice/ Items	Gross Amount	Discounts/ Deductions	Net Pay	Paid Date	Batch Number
			FIRE Port-O-Let P8042373	P80000979215	75.00	0.00	75.00		
			** PAYMENT TOTAL **	3	580.00	0.00	580.00	03/12/20	76885
1069256		5774	SOUTHERN COMPUTER WAREHOUSE						
			CyberPwr Smart App Int FJ8277	IN-000629609	336.48	0.00	336.48		
			** PAYMENT TOTAL **	1	336.48	0.00	336.48	03/12/20	76885
1069257		7144	CINTAS CORPORATION NO 2						
			PW UNIFORMS 12700330	4044060848	33.20	0.00	33.20		
			SCSC MATS 12707180	4044060891	12.96	0.00	12.96		
			BELV LIB MATS 12707253	4044061404	7.44	0.00	7.44		
			OXFORD FIRE MATS 12703293	4044061445	10.80	0.00	10.80		
			AN CONT MATS 12700673	4044402639	10.68	0.00	10.68		
			AN CONT UNIFORMS 12703984	4044402648	252.98	0.00	252.98		
			AN CONT UNIFORMS 12703984	4044402648C	208.50-	0.00	208.50-		
			LP FIRE MATS 12704752	4044402680	6.48	0.00	6.48		
			LK PAN LIB MATS 12700601	4044402706	9.06	0.00	9.06		
			WEBSTER FIRE MATS 12704860	4044537949	4.32	0.00	4.32		
			WEBSTER LIB MATS 12700498	4044537970	5.28	0.00	5.28		
			BUSHNELL LIB MATS 12700160	4044538055	6.22	0.00	6.22		
			BUSHNELL FIRE MATS 12704907	4044538056	7.56	0.00	7.56		
			PW MATS 12700425	4044538100	10.14	0.00	10.14		
			FAC/PARKS UNIFORMS 12700245	4044538110	69.80	0.00	69.80		
			PW UNIFORMS 12704444	4044538121	114.31	0.00	114.31		
			PROP APPR MATS #12707183	4044538137	7.92	0.00	7.92		
			TAX COLL MATS 12704367	4044538158	7.92	0.00	7.92		
			PW SHOP UNIFORMS 12700311	4044538165	72.46	0.00	72.46		
			BUSHNELL FIRE MATS 12701852	4044538186	8.64	0.00	8.64		
			COURTHOUSE MATS 12700216	4044538196	11.16	0.00	11.16		
			BUSHNELL FIRE MATS 12701785	4044538220	6.48	0.00	6.48		
			WW FIRE STA MATS 12703237	4044597587	4.32	0.00	4.32		
			** PAYMENT TOTAL **	23	471.63	0.00	471.63	03/12/20	76885
1069258		7191	AKCA INC						
			Striping HWY C-470	8883	23,190.50	0.00	23,190.50		
			** PAYMENT TOTAL **	1	23,190.50	0.00	23,190.50	03/12/20	76885
1069259		7357	CARR, RIGGS & INGRAM, LLC						
			FIN STMT AUDIT 9002126000	16843430	35,000.00	0.00	35,000.00		
			** PAYMENT TOTAL **	1	35,000.00	0.00	35,000.00	03/12/20	76885
1069260		7372	ELECTRICAL WORKS						
			Repair of Exterior Lights JAIL	15754	321.21	0.00	321.21		
			On-Call Electrical FAIRGROUNDS	15761	278.75	0.00	278.75		
			PROP APPR/TAX COLL EMERG	15838	380.00	0.00	380.00		

Batch: 0 Period: 03/12/20

Payment Number	HP/ VD	Vendor Number	Name/ Description	Invoice/ Items	Gross Amount	Discounts/ Deductions	Net Pay	Paid Date	Batch Number
			On-Call Electrical -FAIRGROUND	15914	442.65	0.00	442.65		
			On-Call Electrical -STA 23	15921	767.90	0.00	767.90		
			Upgrade Emerg Lighting CRTHSE	15924	844.59	0.00	844.59		
			On-Call Electrical STA 23	15928	270.00	0.00	270.00		
			UPGRAD EMERG LIGHTING CRTHSE	16025	160.00	0.00	160.00		
			Upgrade Emerg Lighting CRTHSE	16036	707.65	0.00	707.65		
			Upgrade Emerg Lighting CRTHSE	16037	1,348.59	0.00	1,348.59		
			ON CALL ELECTRIC PARKS	16038	234.45	0.00	234.45		
			** PAYMENT TOTAL **	11	5,755.79	0.00	5,755.79	03/12/20	76885
1069261		7408	THE VILLAGES TECH SOLUTIONS						
			Economic Development Websites	18561	1,200.00	0.00	1,200.00		
			** PAYMENT TOTAL **	1	1,200.00	0.00	1,200.00	03/12/20	76885
1069262		7450	FLORIDA MUNICIPAL INS TRUST						
			FY 19/20 Auto Ins 0910	0910030120	190,168.50	0.00	186,652.50		
			FY 19/20 Auto Ins 0910	0910030120	190,168.50	0.00	3,373.50		
			FY 19/20 Auto Ins 0910	0910030120	190,168.50	0.00	142.50		
			** PAYMENT TOTAL **	3	190,168.50	0.00	190,168.50	03/12/20	76885
1069263		7557	MYFLORIDACOUNTY.COM						
			MFC REF MYFLC60BOCC	REF02-20	484.63	0.00	484.63		
			** PAYMENT TOTAL **	1	484.63	0.00	484.63	03/12/20	76885
1069264		7560	FACERS						
			SUMTER COUNTY BOCC FL	2020ACTIVEMEMBER1	350.00	0.00	350.00		
			** PAYMENT TOTAL **	1	350.00	0.00	350.00	03/12/20	76885
1069265		7641	WASTE CONNECTIONS OF FLORIDA, INC						
			WASTE DISPOSAL 6473	76547	162.19	0.00	162.19		
			WASTE DISPOSAL 6473	76548	340.82	0.00	340.82		
			WASTE DISPOSAL 6473	76549	126.13	0.00	126.13		
			WASTE DISPOSAL 6473	76556	126.13	0.00	126.13		
			WASTE DISPOSAL 6473	76557	126.13	0.00	126.13		
			WASTE DISPOSAL 6473	76568	162.19	0.00	162.19		
			WASTE DISPOSAL 6473	76570	126.13	0.00	126.13		
			WASTE DISPOSAL 6473	76618	162.19	0.00	162.19		
			** PAYMENT TOTAL **	8	1,331.91	0.00	1,331.91	03/12/20	76885
1069266		7651	BRIGHTVIEW LANDSCAPES, LLC						
			Additional Landscap16618198	6742284	2,455.00	0.00	2,455.00		
			** PAYMENT TOTAL **	1	2,455.00	0.00	2,455.00	03/12/20	76885
1069267		7652	AIR MECHANICAL & SERVICE CORP						
			Rep Air Conditioning Fire#31	97911	729.21	0.00	729.21		
			** PAYMENT TOTAL **	1	729.21	0.00	729.21	03/12/20	76885
1069268		7733	AMERICAN TOWER CORPORATION						

Batch: 0 Period: 03/12/20

Payment Number	HP/ VD	Vendor Number	Name/ Description	Invoice/ Items	Gross Amount	Discounts/ Deductions	Net Pay	Paid Date	Batch Number
			Linden Tower lease agree 77712	3255700	5,165.46	0.00	5,165.46		
			** PAYMENT TOTAL **	1	5,165.46	0.00	5,165.46	03/12/20	76885
1069269		7749	THOUSAND PALMS RESORT						
			BATHOUSE RUTLAND BOAT RAMP	1782	60.00	0.00	60.00		
			** PAYMENT TOTAL **	1	60.00	0.00	60.00	03/12/20	76885
1069270		7833	THE LUNZ GROUP						
			1802.13 BUSHNELL TAX COLL	184284	1,039.35	0.00	1,039.35		
			1802.08 W. WW FIRE STA	184621	4,319.65	0.00	4,319.65		
			** PAYMENT TOTAL **	2	5,359.00	0.00	5,359.00	03/12/20	76885
1069271		7994	AK ASSOCIATES						
			Smart911 Ann Lic SUMTERCO BOCC	9299-FL	46,759.00	0.00	46,759.00		
			** PAYMENT TOTAL **	1	46,759.00	0.00	46,759.00	03/12/20	76885
1069272		8084	BAYSE JANITOR SUPPLY CO						
			Heavenly soft white roll towel	143735	281.22	0.00	281.22		
			** PAYMENT TOTAL **	1	281.22	0.00	281.22	03/12/20	76885
1069273		8217	DORMA USA- DBA FLORIDA DOOR CONT						
			Auto Door Rep at TVSCS 65714	551657	1,833.72	0.00	1,833.72		
			** PAYMENT TOTAL **	1	1,833.72	0.00	1,833.72	03/12/20	76885
1069274		8233	AUTOMATED BLDG CONTROL SYSTEMS, INC						
			Prev Maint HV NOV SUMBOCC	41832	1,040.00	0.00	1,040.00		
			** PAYMENT TOTAL **	1	1,040.00	0.00	1,040.00	03/12/20	76885
1069275		8276	MILLER ELECTRIC						
			Rep Access Card Read 54755-SSG	80133718	975.00	0.00	975.00		
			Rep Access Control Card Read	80133993	800.00	0.00	800.00		
			Repair Access Control Card Rea	80134166	600.00	0.00	600.00		
			** PAYMENT TOTAL **	3	2,375.00	0.00	2,375.00	03/12/20	76885
1069276		8286	AJAX BUILDING CORPORATION						
			Jail Exp Project GMP #4	201828-PAYAPP4	954,857.50	0.00	954,857.50		
			** PAYMENT TOTAL **	1	954,857.50	0.00	954,857.50	03/12/20	76885
1069277		8299	A-1 TITLE OF THE NATURE COAST						
			V#22Title search for S Brown	18-263	150.00	0.00	150.00		
			V#21 Title Search A.COLETTI	20-269	150.00	0.00	150.00		
			V#20 Title Search M. Wilson	20-270	150.00	0.00	150.00		
			** PAYMENT TOTAL **	3	450.00	0.00	450.00	03/12/20	76885
1069278		8306	CHRIS RANKIN						
			RESILIENCE&HOMELAND SEC	RANKINC1	1,100.00	0.00	1,100.00		
			** PAYMENT TOTAL **	1	1,100.00	0.00	1,100.00	03/12/20	76885
1069279		8363	J. A. STANDRIDGE CONSTRUCTION						
			AN SHELTER GUILLOTINE DOORS	ASGUILLOTINEDOORS	8,325.94	0.00	8,325.94		
			** PAYMENT TOTAL **	1	8,325.94	0.00	8,325.94	03/12/20	76885

Batch: 0 Period: 03/12/20

Payment Number	HP/ VD	Vendor Number	Name/ Description	Invoice/ Items	Gross Amount	Discounts/ Deductions	Net Pay	Paid Date	Batch Number
1069280		8390	TREADMILLS N MORE						
			Exercise Equip Svc/Rep	4731	680.00	0.00	680.00		
			** PAYMENT TOTAL **	1	680.00	0.00	680.00	03/12/20	76885
1069281		8457	MICHAEL KLINE						
			FIRE DYNAMICS	KLINEM1	527.85	0.00	527.85		
			** PAYMENT TOTAL **	1	527.85	0.00	527.85	03/12/20	76885
1069282		8461	MARK H. ANDERSON						
			REIMB FOR FOOTWEAR	19-20ANDERSONM1	100.00	0.00	100.00		
			** PAYMENT TOTAL **	1	100.00	0.00	100.00	03/12/20	76885
1069283		8468	CIT BANK, N.A.						
			Lease Chgs -900-0258312-028	35022040	212.97	0.00	212.97		
			Lease Chgs -9000258312-026	35050867	88.70	0.00	88.70		
			Lease Chgs - 900-0299370-000	35060013	963.75	0.00	963.75		
			Lease Chgs 9000258312004 -012	35068915	1,475.29	0.00	1,475.29		
			Lease Chgs 9000258312014 -031	35068916	4,709.24	0.00	4,709.24		
			Lease Chgs 9000258312002-003	35068917	630.42	0.00	630.42		
			Lease Chgs -900-0258312-007	35068918	65.44	0.00	65.44		
			Lease Chgs -900-0258312-010	35068919	199.15	0.00	199.15		
			Lease Chgs -900-0271584-000	35068922	218.73	0.00	218.73		
			Lease Charges -900-0297160-000	35068923	58.70	0.00	58.70		
			Lease Chgs -900-0280209-000	35076159	203.00	0.00	203.00		
			** PAYMENT TOTAL **	11	8,825.39	0.00	8,825.39	03/12/20	76885
1069284		8565	TROPIC SUPPLY, INC						
			Water Filtration Cartridges	4863927-00	199.15	0.00	199.15		
			Water Filtration Cartridges	4863927-01	278.81	0.00	278.81		
			** PAYMENT TOTAL **	2	477.96	0.00	477.96	03/12/20	76885
1069285		8578	MARLOW WHITE UNIFORMS, INC						
			Honor Guard Uniforms	INV0923715	2,932.00	0.00	2,932.00		
			** PAYMENT TOTAL **	1	2,932.00	0.00	2,932.00	03/12/20	76885
1069286		8615	ROBERT MOORE						
			REIMB FOR FOOTWEAR	19-20MOORER1	100.00	0.00	100.00		
			** PAYMENT TOTAL **	1	100.00	0.00	100.00	03/12/20	76885
1069287		8620	COHERENT STAFFING SOLUTIONS						
			AN CONT 12/30-2/2	1851B-ANIMALSERVICES	6,405.33	0.00	6,405.33		
			Personnel Svcs - Admin 2/3-3/1	1868A-ADMIN	7,966.77	0.00	7,966.77		
			CDA EMPLOYEES 2/3-3/1	1868C-CDA	10,136.00	0.00	10,136.00		
			** PAYMENT TOTAL **	3	24,508.10	0.00	24,508.10	03/12/20	76885
1069288		8640	AMERICAN MEDICAL RESPONSE						
			Emerg Ambulance Transport NOV	NOVEMBER2019	105,000.00	0.00	105,000.00		
			Emerg Ambulance Transport OCT	OCTOBER2019	106,875.00	0.00	106,875.00		

Batch: 0 Period: 03/12/20

Payment Number	HP/ VD	Vendor Number	Name/ Description	Invoice/ Items	Gross Amount	Discounts/ Deductions	Net Pay	Paid Date	Batch Number
			** PAYMENT TOTAL **	2	211,875.00	0.00	211,875.00	03/12/20	76885
1069289		8643	CANARX GROUP INC						
			Claim for Mail Order Pharmacy/	23093	259.90	0.00	259.90		
			** PAYMENT TOTAL **	1	259.90	0.00	259.90	03/12/20	76885
1069290		8645	SARAH BESSLER						
			REIMB FOR FOOTWEAR	19-20BESSLERS1	49.84	0.00	49.84		
			** PAYMENT TOTAL **	1	49.84	0.00	49.84	03/12/20	76885
1069291		8666	ACME AUTO LEASING, LLC						
			Vehicle Lease SUMTERCO 4515	20030132	11,090.00	0.00	11,090.00		
			Vehicle Lease SUMTERCO6382	20030151	1,295.00	0.00	1,295.00		
			** PAYMENT TOTAL **	2	12,385.00	0.00	12,385.00	03/12/20	76885
1069292		8668	EVERGLADES EQUIPMENT GROUP						
			Bar & Chain Oil SUMTE020	P15469	119.12	0.00	119.12		
			XSCHAIN SUMTE020	P15470	32.94	0.00	32.94		
			** PAYMENT TOTAL **	2	152.06	0.00	152.06	03/12/20	76885
1069293		8681	FRANK CALASCIONE						
			2/9-11 IEDC TAMPA SUMMIT	19-20CALASCIONEF1	49.00	0.00	49.00		
			** PAYMENT TOTAL **	1	49.00	0.00	49.00	03/12/20	76885
1069294		8716	AFS JANITORIAL SERVICES						
			Janitorial Contract - 11168	42259	36,340.11	0.00	36,340.11		
			** PAYMENT TOTAL **	1	36,340.11	0.00	36,340.11	03/12/20	76885
1069295		8721	HC CODE OF FLORIDA, LLC						
			On Call Code Enf 2/24-3/6	10049	5,810.00	0.00	4,008.90		
			On Call Code Enf 2/24-3/6	10049	5,810.00	0.00	1,801.10		
			** PAYMENT TOTAL **	2	5,810.00	0.00	5,810.00	03/12/20	76885
1069296		8762	MCCALL SERVICE, INC						
			Pest Control 39911932	58395731	925.00	0.00	925.00		
			** PAYMENT TOTAL **	1	925.00	0.00	925.00	03/12/20	76885
1069297		8798	CONCENTRA MEDICAL CENTERS						
			Drug Screening N331242274725	1154059668	55.00	0.00	55.00		
			** PAYMENT TOTAL **	1	55.00	0.00	55.00	03/12/20	76885
1069298		8823	VECTOR DISEASE CONTROL INTERNATIONAL, LL						
			Mosquito Cont Svcs SUMTER01	PI-A00007201	35,250.00	0.00	35,250.00		
			** PAYMENT TOTAL **	1	35,250.00	0.00	35,250.00	03/12/20	76885
1069299		8824	JSM SERVICES INC						
			ROW MOWING FEB 137 SUMTER CO	27624	12,431.20	0.00	12,431.20		
			** PAYMENT TOTAL **	1	12,431.20	0.00	12,431.20	03/12/20	76885
1069300		8842	LAW OFFICE OF HOLLY E COSBY PA						
			February 2020 -VAB CHARGES	2067	90.00	0.00	90.00		
			** PAYMENT TOTAL **	1	90.00	0.00	90.00	03/12/20	76885

Batch: 0 Period: 03/12/20

Payment Number	HP/ VD	Vendor Number	Name/ Description	Invoice/ Items	Gross Amount	Discounts/ Deductions	Net Pay	Paid Date	Batch Number
1069301		8869	IAEM USA						
			IAEM Richard O'Brien Cert	2020IAEMOBRIENR	410.00	0.00	410.00		
			** PAYMENT TOTAL **	1	410.00	0.00	410.00	03/12/20	76885
1069302		8883	M T CAUSLEY, LLC						
			1901014001 SUMTER CO.INSPECT	75355	9,228.75	0.00	9,228.75		
			** PAYMENT TOTAL **	1	9,228.75	0.00	9,228.75	03/12/20	76885
1069303		8887	ODYSSEY INTERNATIONAL, INC						
			W.WW FIRE STA #33 #1	ITB05102019PAYAPP1	173,089.53	0.00	173,089.53		
			** PAYMENT TOTAL **	1	173,089.53	0.00	173,089.53	03/12/20	76885
1069304		8898	CONSOLIDATED PIPE & SUPPLY COMPANY, INC						
			Owner Direct Purchase 772016	7700386-000-000	1,485.00	0.00	1,485.00		
			Owner Direct Purchase 772016	7700634-000-000	544.00	0.00	544.00		
			Owner Direct Purchase 772016	7700635-000-000	71.50	0.00	71.50		
			Owner Direct Purchase 772016	7700866-000-000	312.50	0.00	312.50		
			** PAYMENT TOTAL **	4	2,413.00	0.00	2,413.00	03/12/20	76885
1069305		8909	ALL SAFE INDUSTRIES, INC						
			ChemPro 100i w/ SAK.	20-83149	15,627.63	0.00	15,627.63		
			** PAYMENT TOTAL **	1	15,627.63	0.00	15,627.63	03/12/20	76885
1069306		8917	SYNERGYNDS, INC						
			Watr Dmg Jud Bld GC2019096407	2020-6407D	5,000.00	0.00	5,000.00		
			** PAYMENT TOTAL **	1	5,000.00	0.00	5,000.00	03/12/20	76885
3329		8349	EMPLOYEE BENEFITS CORPORATION						
			FSA Claims 2/26-3/3/2020	2824178	320.74	0.00	320.74		
	HP		** PAYMENT TOTAL **	1	320.74	0.00	320.74	03/05/20	76827
3330		8349	EMPLOYEE BENEFITS CORPORATION						
			FSA Claims 2/25-3/3/2020	2825176	1,304.65	0.00	1,304.65		
	HP		** PAYMENT TOTAL **	1	1,304.65	0.00	1,304.65	03/06/20	76839
3331		8349	EMPLOYEE BENEFITS CORPORATION						
			FSA Claims 3/4/2020	2826182	687.98	0.00	687.98		
	HP		** PAYMENT TOTAL **	1	687.98	0.00	687.98	03/09/20	76846
3332		7826	DELTA DENTAL INSURANCE COMPANY						
			DENTAL ACH3/9/2020 2/27-3/4	BE003834550C	4,991.95	0.00	4,991.95		
	HP		** PAYMENT TOTAL **	1	4,991.95	0.00	4,991.95	03/09/20	76847
3333		8349	EMPLOYEE BENEFITS CORPORATION						
			FSA Claims 3/5-6/2020	2828067	896.24	0.00	896.24		
	HP		** PAYMENT TOTAL **	1	896.24	0.00	896.24	03/10/20	76856
3334		8349	EMPLOYEE BENEFITS CORPORATION						
			FSA Claims 3/6-8/2020	2829497	1,001.35	0.00	1,001.35		
	HP		** PAYMENT TOTAL **	1	1,001.35	0.00	1,001.35	03/11/20	76874
877		212	BANK OF AMERICA						

Batch: 0 Period: 03/12/20

Payment Number	HP/ VD	Vendor Number	Name/ Description	Invoice/ Items	Gross Amount	Discounts/ Deductions	Net Pay	Paid Date	Batch Number
			JAN PURCHASING CARD CHARGES	JAN2020-001	45,373.33	0.00	45,373.33		
	HP		** PAYMENT TOTAL **	1	45,373.33	0.00	45,373.33	03/09/20	76843
878		212	BANK OF AMERICA						
			JAN PURCHASING CARD CHARGES	JAN2020-124	440.00	0.00	440.00		
	HP		** PAYMENT TOTAL **	1	440.00	0.00	440.00	03/09/20	76843
879		212	BANK OF AMERICA						
			JAN PURCHASING CARD CHARGES	JAN2020-128	492.13	0.00	492.13		
	HP		** PAYMENT TOTAL **	1	492.13	0.00	492.13	03/09/20	76843
880		212	BANK OF AMERICA						
			JAN PURCHASING CARD CHARGES	JAN2020-129	1,322.85	0.00	1,322.85		
	HP		** PAYMENT TOTAL **	1	1,322.85	0.00	1,322.85	03/09/20	76843
BANK TOTALS			PAYMENTS: 104 VOIDS: 0	282	6,212,970.01	0.00	6,212,970.01		

Batch: 0 Period: 03/12/20

Payment Number	HP/ VD	Vendor Number	Name/ Description		Invoice/ Items	Gross Amount	Discounts/ Deductions	Net Pay	Paid Date	Batch Number
REGISTER TOTALS			PAYMENTS: 104	VOIDS: 0	282	6,212,970.01	0.00	6,212,970.01		
PAYMENT TYPE TOTALS										
CHK			PAYMENTS: 94	VOIDS: 0		6,156,138.79	0.00	6,156,138.79		
EFT			PAYMENTS: 6	VOIDS: 0		9,202.91	0.00	9,202.91		
WIRE			PAYMENTS: 4	VOIDS: 0		47,628.31	0.00	47,628.31		

SUMTER BOARD OF COMMISSIONERS
Payment Register Print

Batch: 0 Period: 03/16/20

Payment Number	HP/ VD	Vendor Number	Name/ Description	Invoice/ Items	Gross Amount	Discounts/ Deductions	Net Pay	Paid Date	Batch Number
			FOR BANK ACCOUNT:2 SUNTRUST BANK, NATURE COAST		PAYABLES CLEARING ACCOUNT				
1069308		2786	POSTAGE BY PHONE RESERVE ACCT						
			Postage for Mail Mach 33525106	33525106022820	20,000.00	0.00	20,000.00		
			** PAYMENT TOTAL **	1	20,000.00	0.00	20,000.00	03/16/20	76907
3338		8349	EMPLOYEE BENEFITS CORPORATION						
			FSA Claims 2/12-3/11/2020	2831531	697.00	0.00	697.00		
	HP		** PAYMENT TOTAL **	1	697.00	0.00	697.00	03/13/20	76902
BANK TOTALS			PAYMENTS: 2 VOIDS: 0	2	20,697.00	0.00	20,697.00		

SUMTER BOARD OF COMMISSIONERS
Payment Register Print

Batch: 0 Period: 03/16/20

Payment Number	HP/ VD	Vendor Number	Name/ Description		Invoice/ Items	Gross Amount	Discounts/ Deductions	Net Pay	Paid Date	Batch Number
REGISTER TOTALS			PAYMENTS: 2	VOIDS: 0	2	20,697.00	0.00	20,697.00		
PAYMENT TYPE TOTALS										
CHK			PAYMENTS: 1	VOIDS: 0		20,000.00	0.00	20,000.00		
EFT			PAYMENTS: 1	VOIDS: 0		697.00	0.00	697.00		

SUMTER BOARD OF COMMISSIONERS
Payment Register Print

Batch: 0 Period: 03/19/20

Payment Number	HP/ VD	Vendor Number	Name/ Description	Invoice/ Items	Gross Amount	Discounts/ Deductions	Net Pay	Paid Date	Batch Number
			FOR BANK ACCOUNT:2 SUNTRUST BANK, NATURE COAST		PAYABLES CLEARING ACCOUNT				
1069309		7	CLERK OF CIRCUIT COURT						
			V#197 REC FEE R.STAMEY	RS031620	10.00	0.00	10.00		
			** PAYMENT TOTAL **	1	10.00	0.00	10.00	03/19/20	76952
1069310		7	CLERK OF CIRCUIT COURT						
			3 SATISFACTIONS OF CR LIENS	2219	30.00	0.00	30.00		
			** PAYMENT TOTAL **	1	30.00	0.00	30.00	03/19/20	76952
1069311		402	CITY OF BUSHNELL						
			20113651-0 1/13-2/17	20113651-0021720	545.67	0.00	545.67		
			** PAYMENT TOTAL **	1	545.67	0.00	545.67	03/19/20	76952
1069312		615	ERNIE MORRIS ENTERPRISES						
			Assort Neon Color Paper 10244	419196-0	12.75	0.00	12.75		
			Scott Hard Roll Towels 10244	419241-0	548.85	0.00	548.85		
			** PAYMENT TOTAL **	2	561.60	0.00	561.60	03/19/20	76952
1069313		680	DUKE ENERGY						
			05342 71111 2/6-3/9	0534271111030920	30.14	0.00	30.14		
			06477 82312 1/29-2/28	0647782312022820	134.30	0.00	134.30		
			24515 32248 2/6-3/9	2451532248030920	35.56	0.00	35.56		
			38023 00315 2/6-3/9	3802300315030920	23.13	0.00	23.13		
			69843 30123 1/29-2/28	6984330123022820	18.66	0.00	18.66		
			88928 83777 1/29-2/28	8892883777022820	30.46	0.00	30.46		
			** PAYMENT TOTAL **	6	272.25	0.00	272.25	03/19/20	76952
1069314		1006	LASER ACTION PLUS, INC.						
			Printer maint cont STAAT01X	IN116219	45.40	0.00	45.40		
			Xerox Toner 6125N STAAT01X	IN116574	59.97	0.00	59.97		
			** PAYMENT TOTAL **	2	105.37	0.00	105.37	03/19/20	76952
1069315		1176	NAPA AUTO PARTS						
			Diesel Exhaust Fluid 2.5 7969	802311	174.75	0.00	174.75		
			** PAYMENT TOTAL **	1	174.75	0.00	174.75	03/19/20	76952
1069316		1565	SECO ENERGY						
			6010064200 2/3-3/4	6010064200030420	46.06	0.00	46.06		
			6011115600 2/5-3/6	6011115600030620	53.19	0.00	53.19		
			6011185000 2/3-3/4	6011185000030420	49.93	0.00	49.93		
			6011185200 2/3-3/4	6011185200030420	230.00	0.00	230.00		
			6520780010 2/4-3/5	6520780010030520	96.74	0.00	96.74		
			6570845010 2/3-3/4	6570845010030420	192.31	0.00	192.31		
			6571415010 2/3-3/4	6571415010030420	40.06	0.00	40.06		
			6601945010 2/7-3/10	6601945010031020	9.85	0.00	9.85		
			6621700010 2/10-3/11	6621700010031120	75.06	0.00	75.06		
			6621740010 2/10-3/11	6621740010031120	9.23	0.00	9.23		

Batch: 0 Period: 03/19/20

Payment Number	HP/ VD	Vendor Number	Name/ Description	Invoice/ Items	Gross Amount	Discounts/ Deductions	Net Pay	Paid Date	Batch Number
			8010046801 2/6-3/9	8010046801030920	908.66	0.00	908.66		
			8010088500 2/4-3/5	8010088500030520	32.92	0.00	32.92		
			8010298300 2/6-3/9	8010298300030920	9.85	0.00	9.85		
			8011105700 2/5-3/6	8011105700030620	66.80	0.00	66.80		
			8011964000 2/7-3/10	8011964000031020	65.50	0.00	65.50		
			8013409802 2/3-3/4	8013409802030420	1,227.67	0.00	1,227.67		
			8019658200 2/6-3/9	8019658200030920	51.25	0.00	51.25		
			8019721900 2/6-3/9	8019721900030920	54.74	0.00	54.74		
			8019774300 2/7-3/10	8019774300031020	41.40	0.00	41.40		
			8019900300 2/6-3/9	8019900300030920	47.78	0.00	47.78		
			8512442510 2/5-3/6	8512442510030620	51.48	0.00	51.48		
			8514130011 2/5-3/6	8514130011030620	305.92	0.00	305.92		
			8514130111 2/5-3/6	8514130111030620	210.10	0.00	210.10		
			8514130210 2/4-3/5	8514130210030520	9.23	0.00	9.23		
			8514130311 2/5-3/6	8514130311030620	241.91	0.00	241.91		
			8514130411 2/5-3/6	8514130411030620	61.64	0.00	61.64		
			8533422510 2/6-3/9	8533422510030920	177.88	0.00	177.88		
			8547420016 2/5-3/6	8547420016030620	32.92	0.00	32.92		
			9602344201 2/5-3/6	9602344201030620	549.07	0.00	549.07		
			9603089701 2/10-3/11	9603089701031120	436.45	0.00	436.45		
			9603317101 2/5-3/6	9603317101030620	52.73	0.00	52.73		
			9604228202 2/5-3/6	9604228202030620	46.99	0.00	46.99		
			9604228302 2/5-3/6	9604228302030620	48.03	0.00	48.03		
			9604315701 2/7-3/10	9604315701031020	48.64	0.00	48.64		
			9605156602 2/6-3/9	9605156602030920	53.51	0.00	53.51		
			9605780301 2/3-3/4	9605780301030420	5,971.62	0.00	5,971.62		
			9605780501 2/3-3/4	9605780501030420	4,480.55	0.00	4,480.55		
			9605780701030420	9605780701030420	10,278.52	0.00	10,278.52		
			9605780901 2/3-3/4	9605780901030420	13,382.31	0.00	13,382.31		
			9605781101 2/3-3/4	9605781101030420	9,433.54	0.00	9,433.54		
			9605781201 2/3-3/4	9605781201030420	6,023.21	0.00	6,023.21		
			9605781301 2/3-3/4	9605781301030420	2,076.28	0.00	2,076.28		
			9605781401 2/3-3/4	9605781401030420	4,928.44	0.00	4,928.44		
			** PAYMENT TOTAL **	43	62,209.97	0.00	62,209.97	03/19/20	76952
1069317		1599	TAX COLLECTOR, SUMTER COUNTY						
			APR-JUN 2020 BUDGET	APR-JUN2020	587,397.50	0.00	587,397.50		
			** PAYMENT TOTAL **	1	587,397.50	0.00	587,397.50	03/19/20	76952
1069318		1650	TRI-CO COMMUNICATIONS INC.						
			Radio install &Removal 1496	102005912-1	280.02	0.00	280.02		
			Radio install& removal 1496	102005923-1	404.81	0.00	404.81		

Batch: 0 Period: 03/19/20

Payment Number	HP/ VD	Vendor Number	Name/ Description	Invoice/ Items	Gross Amount	Discounts/ Deductions	Net Pay	Paid Date	Batch Number
			Radio install &Removal 1496	102005925-1	418.92	0.00	418.92		
			Radio install & removal 1496	102005940-1	126.47	0.00	126.47		
			Radio install &Removal 1496	102005942-1	209.86	0.00	209.86		
			Radio install &Removal 1496	102005954-1	280.02	0.00	280.02		
			Radio install &Removal 1496	102005959-1	418.92	0.00	418.92		
			Radio install and removal 1496	112001618-1	287.25	0.00	287.25		
			Radio install & remov 1496	119005351-1	869.67	0.00	869.67		
			Radio install & remov 1496	119005352-1	869.67	0.00	869.67		
			Radio install &Removal 1496	119005353-1	854.47	0.00	854.47		
			Radio install &Removal 1496	119005354-1	886.17	0.00	886.17		
			Radio install &Removal 1496	119005355-1	854.47	0.00	854.47		
			Radio install and removal 1496	119005356-1	869.67	0.00	869.67		
			** PAYMENT TOTAL **	14	7,630.39	0.00	7,630.39	03/19/20	76952
1069319		1723	WEBSTER FARM SUPPLY						
			Bolts, Nuts, Flat washers 24	230918	34.45	0.00	34.45		
			** PAYMENT TOTAL **	1	34.45	0.00	34.45	03/19/20	76952
1069320		2603	BRIGHT HOUSE NETWORKS						
			0050316034-02 3/1-31	031603402030220	375.00	0.00	375.00		
			0050317537-02 3/1-31	031753702030220	325.00	0.00	325.00		
			0050320912-01 3/1-31	032091201030220	700.00	0.00	700.00		
			0050322468-01 3/1-31	032246801030220	325.00	0.00	325.00		
			0050325937-02 3/1-31	032593702030220	325.00	0.00	325.00		
			0050336989-01 3/1-31	033698901030220	308.00	0.00	308.00		
			0050341191-01 3/1-31	034119101030220	325.00	0.00	325.00		
			0050348034-01 3/1-31	034803401030220	325.00	0.00	325.00		
			0050380373-01 3/1-31	038037301030220	325.00	0.00	325.00		
			0050585486-01 3/1-31	058548601030220	325.00	0.00	325.00		
			0050669330-01 3/1-31	066933001030220	325.00	0.00	325.00		
			0050669470-01 3/1-31	066947001030220	325.00	0.00	325.00		
			0050745734-01 3/8-4/7	074573401030920	83.88	0.00	83.88		
			0050746423-01 3/4-4/3	074642301030520	889.63	0.00	889.63		
			0050771392-01 3/6-4/5	077139201030720	600.00	0.00	600.00		
			** PAYMENT TOTAL **	15	5,881.51	0.00	5,881.51	03/19/20	76952
1069321		4075	FL DEPT OF JUVENILE JUSTICE						
			JUV DET COST SHARE PROJ MAR	202003-60	8,743.23	0.00	8,743.23		
			** PAYMENT TOTAL **	1	8,743.23	0.00	8,743.23	03/19/20	76952
1069322		4114	SARMA/MAF BACKGROUND SCREENING						
			Background Checks V5033580	41399368	607.78	0.00	607.78		
			** PAYMENT TOTAL **	1	607.78	0.00	607.78	03/19/20	76952
1069323		4353	KIMLEY-HORN AND ASSOC, INC						

Batch: 0 Period: 03/19/20

Payment Number	HP/ VD	Vendor Number	Name/ Description	Invoice/ Items	Gross Amount	Discounts/ Deductions	Net Pay	Paid Date	Batch Number
			SR44 FIRE STA INFRA 142109091	142109091-0220	1,955.00	0.00	1,955.00		
			142109124.1 CR229 DESIGN	16058524	29,129.00	0.00	29,129.00		
			** PAYMENT TOTAL **	2	31,084.00	0.00	31,084.00	03/19/20	76952
1069324		4444	BOUND TREE MEDICAL LLC						
			Replace head&chin strap 106416	83537871	177.16	0.00	177.16		
			** PAYMENT TOTAL **	1	177.16	0.00	177.16	03/19/20	76952
1069325		4641	NORTH SUMTER COUNTY UTILITY						
			N001-3901-00 2/3 3/2	N001-3901-00030220	511.60	0.00	511.60		
			** PAYMENT TOTAL **	1	511.60	0.00	511.60	03/19/20	76952
1069326		4803	SHI INTERNATIONAL CORP.						
			Microsoft Hardware War 1014784	B11439375	267.00	0.00	267.00		
			** PAYMENT TOTAL **	1	267.00	0.00	267.00	03/19/20	76952
1069327		5181	BEYERS FUNERAL HOME INC						
			J.BENNETT INDIGENT CREMATION	20-0272	650.00	0.00	650.00		
			** PAYMENT TOTAL **	1	650.00	0.00	650.00	03/19/20	76952
1069328		5186	CENTURYLINK						
			311445239 3/4/20	311445239030420	11,528.68	0.00	11,528.68		
			311691997 3/1/20	311691997030120	58.69	0.00	58.69		
			311774097 3/1/20	311774097030120	21.50	0.00	21.50		
			470666930 3/2/20	470666930030220	238.73	0.00	238.73		
			** PAYMENT TOTAL **	4	11,847.60	0.00	11,847.60	03/19/20	76952
1069329		5186	CENTURYLINK						
			88860521 3/8/20 E911 CNTR IQ	90295525	2,878.93	0.00	2,878.93		
			** PAYMENT TOTAL **	1	2,878.93	0.00	2,878.93	03/19/20	76952
1069330		5186	CENTURYLINK						
			Agree for Svc&Supp 61996 3/9	2099642	6,736.66	0.00	6,736.66		
			** PAYMENT TOTAL **	1	6,736.66	0.00	6,736.66	03/19/20	76952
1069331		5461	VERIZON WIRELESS						
			342197294-00001 2/2-3/1	9849470768	82.70	0.00	82.70		
			** PAYMENT TOTAL **	1	82.70	0.00	82.70	03/19/20	76952
1069332		5593	BLACKS SUPPLY, INC						
			Condensation Pump SUMTER	LEE116563	115.50	0.00	115.50		
			** PAYMENT TOTAL **	1	115.50	0.00	115.50	03/19/20	76952
1069333		5659	AT&T MOBILITY						
			287286659497 2/1-29	287286659497X030820	520.54	0.00	384.89		
			287286659497 2/1-29	287286659497X030820	520.54	0.00	135.65		
			** PAYMENT TOTAL **	2	520.54	0.00	520.54	03/19/20	76952
1069334		5737	MARION COUNTY BOCC						
			0031033022993501 2/24-3/23	00310330229935010320	152.50	0.00	152.50		
			** PAYMENT TOTAL **	1	152.50	0.00	152.50	03/19/20	76952

Batch: 0 Period: 03/19/20

Payment Number	HP/ VD	Vendor Number	Name/ Description	Invoice/ Items	Gross Amount	Discounts/ Deductions	Net Pay	Paid Date	Batch Number
1069335		5875	VULCAN, INC.						
			Sign Blanks 0704976	353948	1,742.00	0.00	1,742.00		
			** PAYMENT TOTAL **	1	1,742.00	0.00	1,742.00	03/19/20	76952
1069336		5942	SPRINT						
			641417410 2/7-3/6	641417410-216	477.26	0.00	477.26		
			683805418 2/7-3/6	683805418-216	160.19	0.00	160.19		
			** PAYMENT TOTAL **	2	637.45	0.00	637.45	03/19/20	76952
1069337		7042	LANGUAGE LINE SERVICES, INC						
			INTERPRET 9020873428	4771850	41.79	0.00	41.79		
			** PAYMENT TOTAL **	1	41.79	0.00	41.79	03/19/20	76952
1069338		7144	CINTAS CORPORATION NO 2						
			PW UNIFORMS 12704444	4040828291	201.50	0.00	201.50		
			PW UNIFORMS 12704444	4040828291C	84.22-	0.00	84.22-		
			PW UNIFORMS 12700330	4044701760	33.20	0.00	33.20		
			SCSC MATS 12707180	4044701834	12.96	0.00	12.96		
			BELV LIB MATS 12707253	4044702360	7.44	0.00	7.44		
			OXFORD FIRE MATS 12703293	4044702430	10.80	0.00	10.80		
			AN SVCS MATS 12700673	4045038569	10.68	0.00	10.68		
			AN CONT UNIFORMS 12703984	4045038643	50.04	0.00	50.04		
			LP LIB MATS 12700601	4045038707	9.06	0.00	9.06		
			LP FIRE MATS 12704752	4045038727	6.48	0.00	6.48		
			WEBSTER LIB MATS 12700498	4045183118	5.28	0.00	5.28		
			WEBSTER FIRE MATS 12704860	4045183141	4.32	0.00	4.32		
			PW MATS 12700425	4045183150	10.14	0.00	10.14		
			WW FIRE STA MATS 12704907	4045183167	7.56	0.00	7.56		
			FAC/PARKS UNIFORMS 12700245	4045183177	69.80	0.00	69.80		
			BUSHNELL LIB MATS 12700160	4045183185	6.22	0.00	6.22		
			COURTHOUSE MATS 12700216	4045183220	11.16	0.00	11.16		
			PW SHOP UNIFORMS 12700311	4045183248	72.46	0.00	72.46		
			PROP APPR MATS 12707183	4045183256	7.92	0.00	7.92		
			TAX COLL MATS 12704367	4045183293	7.92	0.00	7.92		
			BUSHNELL FIRE STA 12701852	4045183296	8.64	0.00	8.64		
			BUSHNELL FIRE MATS 12701785	4045183375	6.48	0.00	6.48		
			WW FIRE STA MATS 12703237	4045281686	4.32	0.00	4.32		
			PW UNIFORMS 12700330	4045436530	33.20	0.00	33.20		
			SCSC MATS 12707180	4045436570	12.96	0.00	12.96		
			BELV LIB MATS 12707253	4045436874	7.44	0.00	7.44		
			OXFORD FIRE MATS 12703293	4045436922	10.80	0.00	10.80		
			ANIMAL CONT UNIFORM 12703984	9078793359	20.85	0.00	20.85		
			** PAYMENT TOTAL **	28	565.41	0.00	565.41	03/19/20	76952

Batch: 0 Period: 03/19/20

Payment Number	HP/ VD	Vendor Number	Name/ Description	Invoice/ Items	Gross Amount	Discounts/ Deductions	Net Pay	Paid Date	Batch Number
1069339		7408	THE VILLAGES TECH SOLUTIONS						
			December Cloud Backup	18313	249.99	0.00	249.99		
			** PAYMENT TOTAL **	1	249.99	0.00	249.99	03/19/20	76952
1069340		7563	SKYLINE ELEVATOR						
			Elevator Repair at Courthouse	209664	640.00	0.00	640.00		
			** PAYMENT TOTAL **	1	640.00	0.00	640.00	03/19/20	76952
1069341		7626	GENERAL UTILITIES						
			LK OKA PARK WATER PLANT INSP	333100	160.28	0.00	160.28		
			** PAYMENT TOTAL **	1	160.28	0.00	160.28	03/19/20	76952
1069342		7641	WASTE CONNECTIONS OF FLORIDA, INC						
			Hauling Services 6473	77383	1,875.00	0.00	1,875.00		
			** PAYMENT TOTAL **	1	1,875.00	0.00	1,875.00	03/19/20	76952
1069343		7651	BRIGHTVIEW LANDSCAPES, LLC						
			Irrigation Repairs - February	6738189	563.00	0.00	563.00		
			** PAYMENT TOTAL **	1	563.00	0.00	563.00	03/19/20	76952
1069344		7652	AIR MECHANICAL & SERVICE CORP						
			HVAC Contract SUMTERCO	FM21271	2,207.92	0.00	2,207.92		
			** PAYMENT TOTAL **	1	2,207.92	0.00	2,207.92	03/19/20	76952
1069345		7676	ANTHONY DAWKINS						
			3/13/20 DIRECT DEPOSIT REJECT	3-13-20DIRDEPOSITREJ	184.62	0.00	184.62		
			** PAYMENT TOTAL **	1	184.62	0.00	184.62	03/19/20	76952
1069346		7679	DIRECTV						
			019402692 3/9-4/8	37251157477	38.99	0.00	38.99		
			** PAYMENT TOTAL **	1	38.99	0.00	38.99	03/19/20	76952
1069347		7823	ELIZABETH M. BERTELO						
			Public Def IT 3/2-3/13	EB031320	1,307.69	0.00	1,307.69		
			** PAYMENT TOTAL **	1	1,307.69	0.00	1,307.69	03/19/20	76952
1069348		7856	STAPLES ADVANTAGE						
			Gloves ATL1806898	3441530832	63.92	0.00	63.92		
			ERASER,TAPE DISP ATL1806898	3441530833	34.76	0.00	34.76		
			OFFICE SUPPLIES ATL1806898	3441530835	15.24	0.00	15.24		
			Dry Erase Easel ATL1806898	3441530836	205.00	0.00	205.00		
			Dawn Dish Det ATL1806898	3441530838	155.16	0.00	155.16		
			** PAYMENT TOTAL **	5	474.08	0.00	474.08	03/19/20	76952
1069349		7864	HUMANA INSURANCE COMPANY						
			Vision Premiums 628721-001	990895970	2,302.52	0.00	2,302.52		
			** PAYMENT TOTAL **	1	2,302.52	0.00	2,302.52	03/19/20	76952
1069350		7979	HEART OF FLORIDA ENVIRONMENTAL						
			Hauling Services 34	2366	2,087.93	0.00	2,087.93		
			** PAYMENT TOTAL **	1	2,087.93	0.00	2,087.93	03/19/20	76952

Batch: 0 Period: 03/19/20

Payment Number	HP/ VD	Vendor Number	Name/ Description	Invoice/ Items	Gross Amount	Discounts/ Deductions	Net Pay	Paid Date	Batch Number
1069351		7984	RALPH KAYLOR						
			1/21-25 2020 FIRE RESCUE EAST	19-20KAYLORR1	109.00	0.00	109.00		
			** PAYMENT TOTAL **	1	109.00	0.00	109.00	03/19/20	76952
1069352		8086	WILLIE HAUGABROOK						
			1/21-25 2020 FIRE RESCUE EAST	19-20HAUGABROOKW1	109.00	0.00	109.00		
			** PAYMENT TOTAL **	1	109.00	0.00	109.00	03/19/20	76952
1069353		8107	ARGOS USA CORP						
			Owner Direct Purchase 100928	91866074	318.00	0.00	318.00		
			Owner Direct Purchase 100928	91869430	216.00	0.00	216.00		
			** PAYMENT TOTAL **	2	534.00	0.00	534.00	03/19/20	76952
1069354		8154	SEMINOLE CO FIRE/EMS TRAINING CENTER						
			VMR Ops training J.HENIGSMITH	557	550.00	0.00	550.00		
			** PAYMENT TOTAL **	1	550.00	0.00	550.00	03/19/20	76952
1069355		8175	SHARON CARUTHERS						
			COMMUNITY NEEDS ASSESSMENT	CARUTHERSS1	1,690.00	0.00	1,690.00		
			** PAYMENT TOTAL **	1	1,690.00	0.00	1,690.00	03/19/20	76952
1069356		8240	VANASSE HANGEN BRUSTLIN, INC						
			Traffic Co Profess 62911.04	0308977	16,144.00	0.00	16,144.00		
			** PAYMENT TOTAL **	1	16,144.00	0.00	16,144.00	03/19/20	76952
1069357		8299	A-1 TITLE OF THE NATURE COAST						
			V#23 Title search James Maurer	20-271	150.00	0.00	150.00		
			** PAYMENT TOTAL **	1	150.00	0.00	150.00	03/19/20	76952
1069358		8311	MATTHEW LONGEST						
			1/22-25 2020 FIRE RESCUE EAST	19-20LONGESTM1	108.00	0.00	108.00		
			** PAYMENT TOTAL **	1	108.00	0.00	108.00	03/19/20	76952
1069359		8416	NICHOLAS JONES						
			1/22-25 2020 FIRE RESCUE EAST	19-20JONESN1	138.00	0.00	138.00		
			** PAYMENT TOTAL **	1	138.00	0.00	138.00	03/19/20	76952
1069360		8460	HARTFORD LIFE AND ACCIDENT INSURANCE COM						
			Basic Life Ins Prem 878871 MAR	878871MARCH2020	31,467.82	0.00	31,467.82		
			Voluntary Supp Ben 878871 MAR	878871SUPPLMAR2020	4,729.61	0.00	4,729.61		
			** PAYMENT TOTAL **	2	36,197.43	0.00	36,197.43	03/19/20	76952
1069361		8468	CIT BANK, N.A.						
			Lease Chgs 900-0258312-029	35068920	114.70	0.00	114.70		
			Lease Chgs -900-0258312-030	35068921	234.80	0.00	234.80		
			** PAYMENT TOTAL **	2	349.50	0.00	349.50	03/19/20	76952
1069362		8481	JENNIFER SANDERS						
			RETIREE WAIVED INS #5	19-20SANDERSJ5	173.64	0.00	173.64		
			** PAYMENT TOTAL **	1	173.64	0.00	173.64	03/19/20	76952
1069363		8498	OSBURN ASSOCIATES INC						

Batch: 0 Period: 03/19/20

Payment Number	HP/ VD	Vendor Number	Name/ Description	Invoice/ Items	Gross Amount	Discounts/ Deductions	Net Pay	Paid Date	Batch Number
			Replacement BOCC Decals	274057	81.50	0.00	81.50		
			** PAYMENT TOTAL **	1	81.50	0.00	81.50	03/19/20	76952
1069364		8524	KEVIN LANIER						
			1/22-25 2020 FIRE RESCUE EAST	19-20LANIERK1	108.00	0.00	108.00		
			** PAYMENT TOTAL **	1	108.00	0.00	108.00	03/19/20	76952
1069365		8525	WILLIAM GROVE						
			1/22-25 2020 FIRE RESCUE EAST	19-20GROVEW1	108.00	0.00	108.00		
			** PAYMENT TOTAL **	1	108.00	0.00	108.00	03/19/20	76952
1069366		8567	KATHLEEN ELIZABETH GLOVER						
			3/2-13 2020 PROG ASSIST	KATHYGLOVER03132020	1,319.36	0.00	1,319.36		
			** PAYMENT TOTAL **	1	1,319.36	0.00	1,319.36	03/19/20	76952
1069367		8620	COHERENT STAFFING SOLUTIONS						
			4 - Kennel Workers 2/3-3/1	1868B-ANIMALSERVICES	6,542.16	0.00	6,542.16		
			OMB PERSONNEL 2/3-3/1	1868I-OMB	4,045.00	0.00	4,045.00		
			CIC 2/3-3/1	1868J-CIC	13,166.45	0.00	13,166.45		
			** PAYMENT TOTAL **	3	23,753.61	0.00	23,753.61	03/19/20	76952
1069368		8643	CANARX GROUP INC						
			Claim Mail Order Pharm 3/1-15	23244	690.70	0.00	690.70		
			** PAYMENT TOTAL **	1	690.70	0.00	690.70	03/19/20	76952
1069369		8665	EAGLE DATAGISTICS						
			MONITORING OTC12012019	8159	64.50	0.00	64.50		
			** PAYMENT TOTAL **	1	64.50	0.00	64.50	03/19/20	76952
1069370		8771	GENSET SERVICES, INC						
			Generator Services - SCPSC	136777	160.00	0.00	160.00		
			Generator Services -FAIRGROUND	136778	80.00	0.00	80.00		
			GENERATOR SVC-JUD CENTER	136780	80.00	0.00	80.00		
			Generator Services det center	136782	80.00	0.00	80.00		
			Generator Services NEW JAIL	136783	160.00	0.00	160.00		
			Generator Services -SCPSC BUSH	136787	80.00	0.00	80.00		
			Generator Svc - PW MAINT	136792	80.00	0.00	80.00		
			Generator Services -BHD	136795	80.00	0.00	80.00		
			Generator Services PW MAINT	136797	80.00	0.00	80.00		
			** PAYMENT TOTAL **	9	880.00	0.00	880.00	03/19/20	76952
1069371		8826	RICHARD O'BRIEN						
			2/2-6 2020 FEPA ANN MTG	19-20OBRIENR1	144.00	0.00	144.00		
			** PAYMENT TOTAL **	1	144.00	0.00	144.00	03/19/20	76952
1069372		8832	TYLER ANDRIUK						
			1/21-25 2020 FIRE RESCUE EAST	19-20ANDRIUKT1	109.00	0.00	109.00		
			** PAYMENT TOTAL **	1	109.00	0.00	109.00	03/19/20	76952
1069373		8835	MSSI INC						

Batch: 0 Period: 03/19/20

Payment Number	HP/ VD	Vendor Number	Name/ Description	Invoice/ Items	Gross Amount	Discounts/ Deductions	Net Pay	Paid Date	Batch Number
			Modular Cells/Mezzanine Stairs	200	326,000.00	0.00	326,000.00		
			** PAYMENT TOTAL **	1	326,000.00	0.00	326,000.00	03/19/20	76952
1069374		8893	ANDREW B WEAVER						
			1/21-25 2020 FIRE RESCUE EAST	19-20WEAVERA3	109.00	0.00	109.00		
			** PAYMENT TOTAL **	1	109.00	0.00	109.00	03/19/20	76952
1069375		8913	KEVIN M DUCHARME						
			1/21-25 2020 FIRE RESCUE EAST	19-20DUCHARMEK1	109.00	0.00	109.00		
			** PAYMENT TOTAL **	1	109.00	0.00	109.00	03/19/20	76952
1069376		8919	KATHLEEN LINDSEY						
			REIMB FOR FOOTWEAR	19-20LINDSEYK1	100.00	0.00	100.00		
			** PAYMENT TOTAL **	1	100.00	0.00	100.00	03/19/20	76952
3339		8349	EMPLOYEE BENEFITS CORPORATION						
			FSA Claims 3/10-11/2020	2832589	108.95	0.00	108.95		
	HP		** PAYMENT TOTAL **	1	108.95	0.00	108.95	03/16/20	76913
3340		7826	DELTA DENTAL INSURANCE COMPANY						
			DENTAL ACH3/16/2020 3/5-11	BE003837112C	14,447.30	0.00	14,447.30		
	HP		** PAYMENT TOTAL **	1	14,447.30	0.00	14,447.30	03/16/20	76914
3341		8349	EMPLOYEE BENEFITS CORPORATION						
			FSA Claims 3/12-13/2020	2841078	657.98	0.00	657.98		
	HP		** PAYMENT TOTAL **	1	657.98	0.00	657.98	03/17/20	76930
3342		8349	EMPLOYEE BENEFITS CORPORATION						
			FSA Claims 3/7-15/2020	2842346	500.01	0.00	500.01		
	HP		** PAYMENT TOTAL **	1	500.01	0.00	500.01	03/18/20	76950
BANK TOTALS			PAYMENTS: 72 VOIDS: 0	198	1,169,850.81	0.00	1,169,850.81		

Batch: 0 Period: 03/19/20

Payment Number	HP/ VD	Vendor Number	Name/ Description		Invoice/ Items	Gross Amount	Discounts/ Deductions	Net Pay	Paid Date	Batch Number
REGISTER TOTALS			PAYMENTS: 72	VOIDS: 0	198	1,169,850.81	0.00	1,169,850.81		
PAYMENT TYPE TOTALS										
	CHK		PAYMENTS: 68	VOIDS: 0		1,154,136.57	0.00	1,154,136.57		
	EFT		PAYMENTS: 4	VOIDS: 0		15,714.24	0.00	15,714.24		

SUMTER BOARD OF COMMISSIONERS
Payment Register Print

Batch: 0 Period: 03/26/20

Payment Number	HP/ VD	Vendor Number	Name/ Description	Invoice/ Items	Gross Amount	Discounts/ Deductions	Net Pay	Paid Date	Batch Number
			FOR BANK ACCOUNT:2 SUNTRUST BANK, NATURE COAST		PAYABLES CLEARING ACCOUNT				
1069377		2	STANLEY F HINELINE						
			RETURNED CD	SHINELINE031820	11.98	0.00	11.98		
			** PAYMENT TOTAL **	1	11.98	0.00	11.98	03/26/20	77031
1069378		7	CLERK OF CIRCUIT COURT						
			ORDER OF SPEC MASTER	2223	71.00	0.00	71.00		
			** PAYMENT TOTAL **	1	71.00	0.00	71.00	03/26/20	77031
1069379		76	ING RELIASTAR LIFE INS CO						
			ING:6068:425:03/21/20	6068:264	1,144.18	0.00	1,144.18		
			** PAYMENT TOTAL **	1	1,144.18	0.00	1,144.18	03/26/20	77031
1069380		80	NYS CHILD SUPPORT						
			CHILD SUP:6068:518:03/21/20	6068:249	274.00	0.00	274.00		
			** PAYMENT TOTAL **	1	274.00	0.00	274.00	03/26/20	77031
1069381		290	GARRY BREEDEN						
			3/12-13 2020 FACT TRUSTEE MTG	19-20BREEDENG2	263.50	0.00	263.50		
			** PAYMENT TOTAL **	1	263.50	0.00	263.50	03/26/20	77031
1069382		380	CENTRAL TESTING LABORATORY, INC						
			Ground Pen Radar 2084055.200	75917	1,445.00	0.00	1,445.00		
			** PAYMENT TOTAL **	1	1,445.00	0.00	1,445.00	03/26/20	77031
1069383		411	CITY OF WILDWOOD						
			50020-0 2/10-3/9	50020-0030920	526.41	0.00	526.41		
			70499-1 2/10-3/9	70499-1030920	478.77	0.00	478.77		
			70500-0 2/10-3/9	70500-0030920	352.59	0.00	352.59		
			70501-0 2/10-3/9	70501-0030920	11.79	0.00	11.79		
			70600-1 2/10-3/9	70600-1030920	207.01	0.00	207.01		
			** PAYMENT TOTAL **	5	1,576.57	0.00	1,576.57	03/26/20	77031
1069384		423	CLERK OF CIRCUIT COURT						
			APRIL 2020 COURTS BUDGET REQ	APR2020COURTS	250.00	0.00	250.00		
			APRIL 2020 BUDGET REQ	APR2020GENFUND	161,511.75	0.00	161,511.75		
			** PAYMENT TOTAL **	2	161,761.75	0.00	161,761.75	03/26/20	77031
1069385		680	DUKE ENERGY						
			09719 74302 2/11-3/12	0971974302031220	14.28	0.00	14.28		
			25481 02461 2/12-3/13	2548102461031320	22.53	0.00	22.53		
			32797 24287 2/17-3/18	3279724287031820	39.44	0.00	39.44		
			61537 37525 2/11-3/12	6153737525031220	168.11	0.00	168.11		
			62111 29365 2/11-3/12	6211129365031220	31.91	0.00	31.91		
			71617 80068 2/11-3/12	7161780068031220	14.28	0.00	14.28		
			84564 17019 2/11-3/12	8456417019031220	107.41	0.00	107.41		
			92322 58560 2/11-3/12	9232258560031220	28.19	0.00	28.19		
			** PAYMENT TOTAL **	8	426.15	0.00	426.15	03/26/20	77031

Batch: 0 Period: 03/26/20

Payment Number	HP/ VD	Vendor Number	Name/ Description	Invoice/ Items	Gross Amount	Discounts/ Deductions	Net Pay	Paid Date	Batch Number
1069386		1553	SUMTER COMMUNICATIONS						
			APRIL 2020 TOWER LIC FEE	04-2020A	12,128.11	0.00	12,128.11		
			APRIL 2020 TOWER SPACE LEASE	04-2020B	1,195.45	0.00	1,195.45		
			** PAYMENT TOTAL **	2	13,323.56	0.00	13,323.56	03/26/20	77031
1069387		1563	SUMTER COUNTY HEALTH DEPT						
			Immunizations for New Hire	013020A	63.84	0.00	63.84		
			Employee Vaccinations	031620	220.79	0.00	220.79		
			** PAYMENT TOTAL **	2	284.63	0.00	284.63	03/26/20	77031
1069388		1565	SECO ENERGY						
			6010156000 2/14-3/17	6010156000031720	44.25	0.00	44.25		
			6722690010 2/18-3/18	6722690010031820	45.71	0.00	45.71		
			8010217900 2/13-3/16	8010217900031620	42.12	0.00	42.12		
			8010473001 2/12-3/12	8010473001031220	54.69	0.00	54.69		
			8010991500 2/11-3/12	8010991500031220	47.37	0.00	47.37		
			8010994200 2/11-3/12	8010994200031220	46.90	0.00	46.90		
			8011092600 2/11-3/12	8011092600031220	49.25	0.00	49.25		
			8011093801 2/11-3/12	8011093801031220	969.78	0.00	969.78		
			8011827900 2/11-3/12	8011827900031220	9.23	0.00	9.23		
			8011840200 2/11-3/12	8011840200031220	79.01	0.00	79.01		
			8011895300 2/11-3/12	8011895300031220	50.09	0.00	50.09		
			8012656101 2/14-3/17	8012656101031720	50.22	0.00	50.22		
			8013831800 2/11-3/12	8013831800031220	43.06	0.00	43.06		
			8019698100 2/6-3/9	8019698100030920	76.03	0.00	76.03		
			8019900000 2/14-3/17	8019900000031720	48.72	0.00	48.72		
			8019900100 2/14-3/17	8019900100031720	47.14	0.00	47.14		
			8019900200 2/14-3/1	8019900200031720	48.26	0.00	48.26		
			8025785300 2/11-3/12	8025785300031220	44.37	0.00	44.37		
			8025852102 2/14-3/17	8025852102031720	49.48	0.00	49.48		
			8026131002 2/11-3/12	8026131002031220	56.31	0.00	56.31		
			8026215701 2/12-3/13	8026215701031320	4,941.00	0.00	4,941.00		
			8026446501 2/18-3/18	8026446501031820	40.92	0.00	40.92		
			8514124010 2/5-3/6	8514124010030620	577.22	0.00	577.22		
			8530460010 2/11-3/12	8530460010031220	17.44	0.00	17.44		
			8531209510 2/12-3/13	8531209510031320	32.92	0.00	32.92		
			8531725010 2/12-3/13	8531725010031320	22.40	0.00	22.40		
			9600430301 2/12-3/13	9600430301031320	57.73	0.00	57.73		
			9600628901 2/12-3/13	9600628901031320	390.57	0.00	390.57		
			9601408801 2/12-3/13	9601408801031320	47.23	0.00	47.23		
			9602442101 2/11-3/12	9602442101031220	33.03	0.00	33.03		
			9603086201 2/12-3/13	9603086201031320	371.53	0.00	371.53		

Batch: 0 Period: 03/26/20

Payment Number	HP/ VD	Vendor Number	Name/ Description	Invoice/ Items	Gross Amount	Discounts/ Deductions	Net Pay	Paid Date	Batch Number
			9603893001 2/5-3/6	9603893001030620	57.05	0.00	57.05		
			9604064201 2/12-3/13	9604064201031320	7,336.04	0.00	7,336.04		
			9604276501 2/11-3/12	9604276501031220	47.94	0.00	47.94		
			9605781501 2/13-3/16	9605781501031620	11,536.44	0.00	11,536.44		
			** PAYMENT TOTAL **	35	27,411.45	0.00	27,411.45	03/26/20	77031
1069389		1581	SUPERVISOR OF ELECTIONS						
			2020 GRANT MATCH	2020GRANTMATCH	2,328.14	0.00	2,328.14		
			APRIL 2020 BUDGET REQ	APR2020	144,147.23	0.00	144,147.23		
			** PAYMENT TOTAL **	2	146,475.37	0.00	146,475.37	03/26/20	77031
1069390		1650	TRI-CO COMMUNICATIONS INC.						
			Radio install &removal 1496	119005333-1	752.70	0.00	752.70		
			** PAYMENT TOTAL **	1	752.70	0.00	752.70	03/26/20	77031
1069391		1726	THOMSON REUTERS WEST						
			West Law Sub 1000588013	842005149	704.00	0.00	704.00		
			** PAYMENT TOTAL **	1	704.00	0.00	704.00	03/26/20	77031
1069392		2013	A-LINE FIRE & SAFETY INC						
			Addtl Fire & Sec Rep VARIOUS	11923	650.50	0.00	650.50		
			Fire Extinguisher Insp VARIOUS	56881	473.00	0.00	473.00		
			Fire Extinguisher Insp VARIOUS	56882	367.00	0.00	367.00		
			Fire Ext Insp WWHD STA23	56883	303.00	0.00	303.00		
			Fire Extinguisher Insp FIRE ST	56884	335.00	0.00	335.00		
			Fire Ext Insp STA 32&22	56885	238.00	0.00	238.00		
			Fire Ext Insp JAIL	57024	954.00	0.00	954.00		
			Fire Extinguisher Insp FAIR	57026	677.50	0.00	677.50		
			Fire Extinguisher Insp PW	57027	925.00	0.00	925.00		
			Fire Extinguisher Insp VARIOUS	57029	187.50	0.00	187.50		
			Fire Extinguisher Insp VARIOUS	57032	677.00	0.00	677.00		
			Fire Extinguisher Insp VAR	57033	212.50	0.00	212.50		
			Fire Extinguisher Insp VARIOUS	57034	250.00	0.00	250.00		
			** PAYMENT TOTAL **	13	6,250.00	0.00	6,250.00	03/26/20	77031
1069393		2259	OVERHEAD DOOR COMPANY OF OCALA						
			Roll Up Door Rep at STA11	13296	1,365.00	0.00	1,365.00		
			Roll Up Door Repairs STA22	13297	204.00	0.00	204.00		
			Roll Up Door Repairs STA12	13298	462.50	0.00	462.50		
			** PAYMENT TOTAL **	3	2,031.50	0.00	2,031.50	03/26/20	77031
1069394		2311	GALLS, LLC						
			Firefighters Uniforms 5420981	015156876	83.60	0.00	83.60		
			Firefighters Uniforms 5420981	015186833	60.41	0.00	60.41		
			Firefighters Uniforms 5420981	015239593	801.17	0.00	801.17		
			Firefighters Uniforms 5420981	015256984	107.64	0.00	107.64		

Batch: 0 Period: 03/26/20

Payment Number	HP/ VD	Vendor Number	Name/ Description	Invoice/ Items	Gross Amount	Discounts/ Deductions	Net Pay	Paid Date	Batch Number
			** PAYMENT TOTAL **	4	1,052.82	0.00	1,052.82	03/26/20	77031
1069395		2803	PATTERSON VETERINARY SUPPLY, INC						
			Pharm&ancillary med 0200137618	3003739434	686.00	0.00	686.00		
			VETAKET 0200137618	300374245	55.50	0.00	55.50		
			Pharm&ancillary med 0200137618	3003751886	2,673.27	0.00	2,673.27		
			** PAYMENT TOTAL **	3	3,414.77	0.00	3,414.77	03/26/20	77031
1069396		3245	PRIORITY DISPATCH						
			Replacement cardset tray 11748	SIN252967	440.00	0.00	440.00		
			** PAYMENT TOTAL **	1	440.00	0.00	440.00	03/26/20	77031
1069397		3329	ROBERT HANSON						
			3/3-5 2020 CPSE EXEC DEV CONF	19-20HANSONR1	55.00	0.00	55.00		
			** PAYMENT TOTAL **	1	55.00	0.00	55.00	03/26/20	77031
1069398		3784	TEN-8 FIRE EQUIPMENT, INC						
			Special Ops Supplies SUMTER	IN875032	5,243.49	0.00	5,243.49		
			** PAYMENT TOTAL **	1	5,243.49	0.00	5,243.49	03/26/20	77031
1069399		4167	C.W. ROBERTS CONTRACTING, INC						
			Hot Mix Asphalt 14027	75156	1,827.55	0.00	1,827.55		
			** PAYMENT TOTAL **	1	1,827.55	0.00	1,827.55	03/26/20	77031
1069400		4353	KIMLEY-HORN AND ASSOC, INC						
			CR525 E EXTENSION 142109076	142109076-0220	7,141.48	0.00	7,141.48		
			1421090871 C478 RESURFACING	16058520	1,818.00	0.00	1,818.00		
			142109117.1 C466 PHII INT IMPR	16135429	9,498.75	0.00	9,498.75		
			BVB EXT DESIGN 142109123.1	16135433	11,697.95	0.00	11,697.95		
			142109097.3 GEN SERVICES	16151078	4,657.50	0.00	4,657.50		
			** PAYMENT TOTAL **	5	34,813.68	0.00	34,813.68	03/26/20	77031
1069401		4370	SPARR BUILDING & FARM SUPPLY						
			ANIMAL FEED S4112	2003-284583	344.18	0.00	344.18		
			** PAYMENT TOTAL **	1	344.18	0.00	344.18	03/26/20	77031
1069402		4641	NORTH SUMTER COUNTY UTILITY						
			N002-3441-00 2/7-3/6	N002-3441-00030620	63.09	0.00	63.09		
			** PAYMENT TOTAL **	1	63.09	0.00	63.09	03/26/20	77031
1069403		4744	R.LEE HAWKINS, JR						
			Code Enf Special Master MARCH	78	945.00	0.00	945.00		
			** PAYMENT TOTAL **	1	945.00	0.00	945.00	03/26/20	77031
1069404		5181	BEYERS FUNERAL HOME INC						
			INDIGENT CREMATION S.RHOADES	20-0316	650.00	0.00	650.00		
			INDIGENT CREMATION T.WILLIAMS	20-0324	650.00	0.00	650.00		
			** PAYMENT TOTAL **	2	1,300.00	0.00	1,300.00	03/26/20	77031
1069405		5186	CENTURYLINK						
			311863995 3/1/20	311863995030120	305.24	0.00	305.24		

Batch: 0 Period: 03/26/20

Payment Number	HP/ VD	Vendor Number	Name/ Description	Invoice/ Items	Gross Amount	Discounts/ Deductions	Net Pay	Paid Date	Batch Number
			421897834 3/3/2020	421897834030320	178.76	0.00	178.76		
			482784029 2/23/20	482784029022320	413.17	0.00	413.17		
			** PAYMENT TOTAL **	3	897.17	0.00	897.17	03/26/20	77031
1069406		5186	CENTURYLINK						
			148-230 88683647 3/15	1488160183	1,298.27	0.00	1,298.27		
			88686139 148-230 3/15	1488160280	686.10	0.00	686.10		
			** PAYMENT TOTAL **	2	1,984.37	0.00	1,984.37	03/26/20	77031
1069407		5433	OUTER IMAGE INC						
			Business Cards Denna Lafferty	22697	35.50	0.00	35.50		
			** PAYMENT TOTAL **	1	35.50	0.00	35.50	03/26/20	77031
1069408		5461	VERIZON WIRELESS						
			842106896-00001 1/24-2/23	9849080040	232.98	0.00	232.98		
			442182347-00001 2/11-3/10	9850175682	308.97	0.00	308.97		
			723723846-00001 2/11-3/10	9850238122	2,734.23	0.00	2,660.25		
			723723846-00001 2/11-3/10	9850238122	2,734.23	0.00	73.98		
			521188371-00001 2/16-3/15	9850545439	4,438.52	0.00	3,707.48		
			521188371-00001 2/16-3/15	9850545439	4,438.52	0.00	599.94		
			521188371-00001 2/16-3/15	9850545439	4,438.52	0.00	131.10		
			521188371-00032 2/16-3/15	9850545440	337.71	0.00	337.71		
			521188371-00033 2/16-3/15	9850545441	32.44	0.00	32.44		
			** PAYMENT TOTAL **	9	8,084.85	0.00	8,084.85	03/26/20	77031
1069409		5701	FEDEX						
			9874-0229-6 SHIPPING	6-959-17259	6.72	0.00	6.72		
			** PAYMENT TOTAL **	1	6.72	0.00	6.72	03/26/20	77031
1069410		5763	THE HOGAN LAW FIRM, LLC						
			GEN REP 07-430	49704	13.02	0.00	13.02		
			CODE ENF/A.BICKFORD 15-113	49708	780.00	0.00	780.00		
			SUMTER V CAP CITY BANK 17-386	49717	5.52	0.00	5.52		
			S.SUMTER WATERSHED 16-219	49760	135.20	0.00	135.20		
			Monthly Retainer 16-377	49761	19,602.00	0.00	19,602.00		
			** PAYMENT TOTAL **	5	20,535.74	0.00	20,535.74	03/26/20	77031
1069411		7144	CINTAS CORPORATION NO 2						
			PW SHOP 12700311	4042638242	90.46	0.00	90.46		
			PW SHOP 12700311	4042638242C	18.00-	0.00	18.00-		
			PW UNIFORMS 12704444	4045183357	240.64	0.00	240.64		
			PW UNIFORMS 12704444	4045183357C	126.33-	0.00	126.33-		
			AN SVC UNIFORMS 12703984	4045683048	50.04	0.00	50.04		
			CDA UNIFORMS 12702379	4045683062	46.04	0.00	46.04		
			CDA UNIFORMS 12702379	4045683062C	46.04-	0.00	46.04-		
			AN SVCS MATS 12700673	4045683065	10.68	0.00	10.68		

Batch: 0 Period: 03/26/20

Payment Number	HP/ VD	Vendor Number	Name/ Description	Invoice/ Items	Gross Amount	Discounts/ Deductions	Net Pay	Paid Date	Batch Number
			LP LIBRARY MATS 12700601	4045683079	9.06	0.00	9.06		
			LP FIRE STA MATS 12704752	4045683101	6.48	0.00	6.48		
			BUSHNELL LIB MATS 12700160	4045825634	6.22	0.00	6.22		
			PW UNIFORMS 12700311	4045825659	72.46	0.00	72.46		
			BUSHNELL FIRE MATS 12704907	4045825664	7.56	0.00	7.56		
			WEBSTER LIB MATS 12700498	4045825672	5.28	0.00	5.28		
			WEBSTER FIRE MATS 12704860	4045825682	4.32	0.00	4.32		
			BUSHNELL FIRE MATS 12701852	4045825699	8.64	0.00	8.64		
			PW MATS 12700425	4045825706	10.14	0.00	10.14		
			PW UNIFORMS 12704444	4045825729	114.31	0.00	114.31		
			TAX COLL MATS 12704367	4045825746	7.92	0.00	7.92		
			BUSHNELL FIRE MATS 12701785	4045825770	6.48	0.00	6.48		
			COURTHOUSE MATS 12700216	4045825775	11.16	0.00	11.16		
			PROP APPR MATS 12707183	4045825782	7.92	0.00	7.92		
			WW FIRE STA MATS 12703237	4045881786	4.32	0.00	4.32		
			SCSC MATS 12707180	4045985963	12.96	0.00	12.96		
			BELV LIB MATS 12707253	4045986387	7.44	0.00	7.44		
			OXFORD FIRE MATS 12703293	4045986504	10.80	0.00	10.80		
			** PAYMENT TOTAL **	26	560.96	0.00	560.96	03/26/20	77031
1069412		7205	PET ANGEL MEMORIAL CENTER						
			Crem&Biomed Waste FLPP1306	FLPP1306-I-0033	30.00	0.00	30.00		
			Crem&Biomed Waste FLPP1306	FLPP1306-I-0034	60.00	0.00	60.00		
			Cremation&Biomed FLPP1306	FLPP1306-I-0036	30.00	0.00	30.00		
			Cremation& Biomed FLPP1306	FLPP1306-I-0037	30.00	0.00	30.00		
			** PAYMENT TOTAL **	4	150.00	0.00	150.00	03/26/20	77031
1069413		7372	ELECTRICAL WORKS						
			Install Addtl Outlet PUB DEF	15821	553.08	0.00	553.08		
			On-Call Electrical -BUSH EM	16120	270.00	0.00	270.00		
			Install Outlets for Television	16122	2,320.00	0.00	2,320.00		
			Insp of Fairgrounds	16123	1,975.00	0.00	1,975.00		
			On-Call Electrical BUSH EM	16124	270.00	0.00	270.00		
			Upgrade/Install elec wiring	16189	4,114.38	0.00	4,114.38		
			Upgrade/Install electric wirin	16190	3,345.00	0.00	3,345.00		
			On-Call Electrical FAIRGROUNDS	16204	160.00	0.00	160.00		
			On-Call Electrical -BUSH PW	16209	309.15	0.00	309.15		
			ON CALL ELECTRICAL JAIL	16210	449.40	0.00	449.40		
			** PAYMENT TOTAL **	10	13,766.01	0.00	13,766.01	03/26/20	77031
1069414		7408	THE VILLAGES TECH SOLUTIONS						
			WEB PROGRAMMING TAX COLL	18273	180.00	0.00	180.00		
			WEB PROGRAMMING/ PROP APPR	18446	1,560.00	0.00	1,560.00		

Batch: 0 Period: 03/26/20

Payment Number	HP/ VD	Vendor Number	Name/ Description	Invoice/ Items	Gross Amount	Discounts/ Deductions	Net Pay	Paid Date	Batch Number
			** PAYMENT TOTAL **	2	1,740.00	0.00	1,740.00	03/26/20	77031
1069415		7563	SKYLINE ELEVATOR						
			Elevator Contract FEB	209733	1,020.00	0.00	1,020.00		
			** PAYMENT TOTAL **	1	1,020.00	0.00	1,020.00	03/26/20	77031
1069416		7603	SUBURBAN PROPANE-1159						
			1159-116724-011 PROPANE	1159-201835	392.45	0.00	392.45		
			1159-116724-016 PROPANE	1159-201836	163.48	0.00	163.48		
			1159-116724-010 PROPANE	1159-221914	275.92	0.00	275.92		
			** PAYMENT TOTAL **	3	831.85	0.00	831.85	03/26/20	77031
1069417		7613	APWA						
			APWA PW Posters 690673	757057	53.80	0.00	53.80		
			** PAYMENT TOTAL **	1	53.80	0.00	53.80	03/26/20	77031
1069418		7652	AIR MECHANICAL & SERVICE CORP						
			HVAC Contract SUMTERCO	FM21662	5,352.08	0.00	5,352.08		
			HVAC Contract -SUMTER CO MAR	FM21664	2,207.92	0.00	2,207.92		
			** PAYMENT TOTAL **	2	7,560.00	0.00	7,560.00	03/26/20	77031
1069419		7679	DIRECTV						
			082710169 3/15-4/14	37268257151	24.99	0.00	24.99		
			** PAYMENT TOTAL **	1	24.99	0.00	24.99	03/26/20	77031
1069420		7772	MUNICIPAL EMERGENCY SERVICES						
			Hazmat & Chemical Mats C48937	IN1437054	167.09	0.00	167.09		
			** PAYMENT TOTAL **	1	167.09	0.00	167.09	03/26/20	77031
1069421		7812	LAUNDRY PRO OF FLORIDA, INC						
			Uninstall &Re-Inst CUST01529	1015037	1,015.00	0.00	1,015.00		
			** PAYMENT TOTAL **	1	1,015.00	0.00	1,015.00	03/26/20	77031
1069422		7856	STAPLES ADVANTAGE						
			Office Supplies ATL1806898	3442166271	64.49	0.00	64.49		
			** PAYMENT TOTAL **	1	64.49	0.00	64.49	03/26/20	77031
1069423		7952	RACHEL BAGGETT						
			CRITICAL THINKING	BAGGETTR6	845.00	0.00	845.00		
			WARRIOR SEMINAR	BAGGETTR7	810.00	0.00	810.00		
			** PAYMENT TOTAL **	2	1,655.00	0.00	1,655.00	03/26/20	77031
1069424		8107	ARGOS USA CORP						
			Owner Direct Purchase 100928	91854267	66,150.00	0.00	66,150.00		
			** PAYMENT TOTAL **	1	66,150.00	0.00	66,150.00	03/26/20	77031
1069425		8109	R & R REBAR FABRICATION, INC						
			Owner Direct Purchase S00095	INV-042920	17,173.30	0.00	17,173.30		
			** PAYMENT TOTAL **	1	17,173.30	0.00	17,173.30	03/26/20	77031
1069426		8268	VOIANCE LANGUAGE SERVICES						
			OVER PHONE INTERPRET 16984	914746	11.25	0.00	11.25		

Batch: 0 Period: 03/26/20

Payment Number	HP/ VD	Vendor Number	Name/ Description	Invoice/ Items	Gross Amount	Discounts/ Deductions	Net Pay	Paid Date	Batch Number
			** PAYMENT TOTAL **	1	11.25	0.00	11.25	03/26/20	77031
1069427		8343	FIRST VEHICLE SERVICES, INC						
			Maint& Rep Cont MAR 1150741	11666217	85,135.00	0.00	85,135.00		
			Maintenance&Rep Cont 1150741	11666241	23,960.72	0.00	23,960.72		
			** PAYMENT TOTAL **	2	109,095.72	0.00	109,095.72	03/26/20	77031
1069428		8394	SAFARI MICRO INC						
			Dell EMC Tape LibrarySafarim	SM345237	16,794.46	0.00	16,794.46		
			** PAYMENT TOTAL **	1	16,794.46	0.00	16,794.46	03/26/20	77031
1069429		8439	REACH MEDIA NETWORK						
			Annual Reach Renewal for Lib	65001	2,000.00	0.00	2,000.00		
			** PAYMENT TOTAL **	1	2,000.00	0.00	2,000.00	03/26/20	77031
1069430		8466	KAYLA JOHNSON						
			PRINCIPLES OF ACCTG I	JOHNSONK3	527.85	0.00	527.85		
			** PAYMENT TOTAL **	1	527.85	0.00	527.85	03/26/20	77031
1069431		8468	CIT BANK, N.A.						
			Lease Chgs 900-0258312-000	35148528	147.11	0.00	147.11		
			Lease Chgs 900-0302200-000	35148529	197.74	0.00	197.74		
			** PAYMENT TOTAL **	2	344.85	0.00	344.85	03/26/20	77031
1069432		8538	SHENANDOAH GENERAL CONSTRUCTION COMPANY						
			Sumter Co Pipe Assess 19436	84186	33,350.00	0.00	33,350.00		
			** PAYMENT TOTAL **	1	33,350.00	0.00	33,350.00	03/26/20	77031
1069433		8567	KATHLEEN ELIZABETH GLOVER						
			Prog Specialist II 3/16-3/27	KATHYGLOVER03272020	1,388.80	0.00	1,388.80		
			** PAYMENT TOTAL **	1	1,388.80	0.00	1,388.80	03/26/20	77031
1069434		8640	AMERICAN MEDICAL RESPONSE						
			CHARGES FROM DORIAN 2019	DORIAN091819	2,168.88	0.00	2,168.88		
			** PAYMENT TOTAL **	1	2,168.88	0.00	2,168.88	03/26/20	77031
1069435		8716	AFS JANITORIAL SERVICES						
			Janitorial Services MARCH FAIR	43000	24,240.00	0.00	24,240.00		
			** PAYMENT TOTAL **	1	24,240.00	0.00	24,240.00	03/26/20	77031
1069436		8721	HC CODE OF FLORIDA, LLC						
			On Call Code Enf 3/9-20 2020	10050	3,500.00	0.00	2,415.00		
			On Call Code Enf 3/9-20 2020	10050	3,500.00	0.00	1,085.00		
			** PAYMENT TOTAL **	2	3,500.00	0.00	3,500.00	03/26/20	77031
1069437		8758	TEALA SOLTIS						
			1/26-31 2020 CERT CRUELTY INV	19-20SOLTIST1	150.00	0.00	150.00		
			REIMB FOR FOOTWEAR	19-20SOLTIST2	100.00	0.00	100.00		
			** PAYMENT TOTAL **	2	250.00	0.00	250.00	03/26/20	77031
1069438		8771	GENSET SERVICES, INC						
			Generator Services CLERK REC	137123	80.00	0.00	80.00		

Batch: 0 Period: 03/26/20

Payment Number	HP/ VD	Vendor Number	Name/ Description	Invoice/ Items	Gross Amount	Discounts/ Deductions	Net Pay	Paid Date	Batch Number
			Generator Services FAIRGROUNDS	137124	160.00	0.00	160.00		
			Generator Services -KDORM	137125	80.00	0.00	80.00		
			Generator Services CLERK ADMIN	137126	80.00	0.00	80.00		
			Generator Services JAIL	137137	160.00	0.00	160.00		
			Generator Services PW	137138	80.00	0.00	80.00		
			Generator Services -SOE	137139	80.00	0.00	80.00		
			Generator Services PW MAINT	137140	80.00	0.00	80.00		
			Generator Services -BHD	137199	80.00	0.00	80.00		
			Generator Services -SCPSC	137200	80.00	0.00	80.00		
			Generator Services 911 BLDG	137320	80.00	0.00	80.00		
			Generator Services WW FIRE 31	137349	80.00	0.00	80.00		
			Generator Services -JUDICIAL	137378	80.00	0.00	80.00		
			Generator Services HELIPAD	137379	80.00	0.00	80.00		
			Generator Services -TAX COLL	137382	80.00	0.00	80.00		
			Generator Services -WWHD	137387	80.00	0.00	80.00		
			Generator Services -FIRE LOG	137388	80.00	0.00	80.00		
			Generator Services -FS12	137390	80.00	0.00	80.00		
			Generator Services - FS#11	137394	80.00	0.00	80.00		
			** PAYMENT TOTAL **	19	1,680.00	0.00	1,680.00	03/26/20	77031
1069439		8796	DAVID NEWELL						
			1/26-31 2020 CERT CRUEL INVEST	19-20NEWELLD1	150.00	0.00	150.00		
			** PAYMENT TOTAL **	1	150.00	0.00	150.00	03/26/20	77031
1069440		8834	CLABORN MANUFACTURING COMPANY						
			Doors/Frames for Modular Cells	200224-1	37,500.00	0.00	37,500.00		
			** PAYMENT TOTAL **	1	37,500.00	0.00	37,500.00	03/26/20	77031
1069441		8836	TKR HOMES, INC						
			V#80 Demo/Recon H.DEAN #6	HD032420	13,500.00	0.00	13,500.00		
			** PAYMENT TOTAL **	1	13,500.00	0.00	13,500.00	03/26/20	77031
1069442		8848	PETE'S LAND CLEARING, LLC						
			STREET SWEEPING	3292	11,827.12	0.00	11,827.12		
			** PAYMENT TOTAL **	1	11,827.12	0.00	11,827.12	03/26/20	77031
1069443		8857	BOWEN SCHROTH MAZENKO & BROOME P.A.						
			REV MAT FOR HEARING 19291001	66345	120.00	0.00	120.00		
			P&Z SPECIAL MASTER 19291002	66346	360.00	0.00	360.00		
			P&Z SPECIAL MASTER 19291002	66636	360.00	0.00	360.00		
			** PAYMENT TOTAL **	3	840.00	0.00	840.00	03/26/20	77031
1069444		8874	WELLRIGHT, LLC						
			Rewards mail fundingInv# CB1	CB10466	5,000.00	0.00	5,000.00		
			** PAYMENT TOTAL **	1	5,000.00	0.00	5,000.00	03/26/20	77031
1069445		8903	SIDNEY SMITH						

Batch: 0 Period: 03/26/20

Payment Number	HP/ VD	Vendor Number	Name/ Description	Invoice/ Items	Gross Amount	Discounts/ Deductions	Net Pay	Paid Date	Batch Number
			Software Consult Svcs FEB	1164	81.25	0.00	81.25		
			** PAYMENT TOTAL **	1	81.25	0.00	81.25	03/26/20	77031
1069446		8926	CHRISTOPHER JOHNSON						
			3/11-13 2020 FGFOA BOOT CAMP	19-20JOHNSONC1	68.00	0.00	68.00		
			** PAYMENT TOTAL **	1	68.00	0.00	68.00	03/26/20	77031
1069447		8927	BRIAN MOLINA						
			1/22-25 2020 FIRE RESCUE EAST	19-20MOLINAB1	108.00	0.00	108.00		
			** PAYMENT TOTAL **	1	108.00	0.00	108.00	03/26/20	77031
BANK TOTALS		PAYMENTS: 71	VOIDS: 0	225	821,609.94	0.00	821,609.94		

Batch: 0 Period: 03/26/20

Payment Number	HP/ VD	Vendor Number	Name/ Description	Invoice/ Items	Gross Amount	Discounts/ Deductions	Net Pay	Paid Date	Batch Number
REGISTER TOTALS		PAYMENTS: 71	VOIDS: 0	225	821,609.94	0.00	821,609.94		
PAYMENT TYPE TOTALS									
CHK		PAYMENTS: 71	VOIDS: 0		821,609.94	0.00	821,609.94		

SUMTER BOARD OF COMMISSIONERS
Check/NOD Register

Run No: 6065 / Period Ending Date: 03/07/20 / Check Date: 03/13/20

Employee No	Check Name	Check/NOD No	Check Amount	EFT Amount	Total	
60543	JORDAN M BAILEY	86777	0.00	1,090.59	1,090.59	_____ NOD
60622	CELESTE M LARISEY	86778	0.00	1,081.99	1,081.99	_____ NOD
60414	EMILLY K MORRISON	86779	0.00	1,053.59	1,053.59	_____ NOD
73	JOHNNY R RICE JR	86780	0.00	1,033.59	1,033.59	_____ NOD
60529	EDWARD L SCANLON	86781	0.00	1,348.44	1,348.44	_____ NOD
705	REBECCA J SEGREST	86782	0.00	2,102.76	2,102.76	_____ NOD
1961	BOBBIE J TODD	86783	0.00	1,271.66	1,271.66	_____ NOD
60525	JACQUELINE A VALDEZ	86784	0.00	1,274.46	1,274.46	_____ NOD
595	BRADLEY S ARNOLD	86785	0.00	5,567.03	5,567.03	_____ NOD
2	GARRY D BREEDEN	86786	0.00	1,640.69	1,640.69	_____ NOD
808	DONALD L BURGESS	86787	0.00	1,514.10	1,514.10	_____ NOD
1836	ALBERT A BUTLER JR	86788	0.00	1,756.36	1,756.36	_____ NOD
143	BETTY E COMIS	86789	0.00	1,227.29	1,227.29	_____ NOD
157	JESSICA R DOUGLAS	86790	0.00	939.29	939.29	_____ NOD
667	DOUG D GILPIN	86791	0.00	1,550.31	1,550.31	_____ NOD
998	STEPHEN J KENNEDY	86792	0.00	3,532.20	3,532.20	_____ NOD
60637	TERESA F MAXWELL	86793	0.00	966.98	966.98	_____ NOD
60603	CHARLENE M PITTMAN	86794	0.00	943.82	943.82	_____ NOD
60439	STEPHEN C PRINTZ	86795	0.00	1,881.69	1,881.69	_____ NOD
746	BRENDA L SCHLAK	86796	0.00	1,167.71	1,167.71	_____ NOD
829	LESLIE M SMITH	86797	0.00	1,741.61	1,741.61	_____ NOD
1848	BRUCE M ATKINSON	86798	0.00	1,677.47	1,677.47	_____ NOD
337	LEROY L EDWARDS	86799	0.00	1,305.08	1,305.08	_____ NOD
60619	JOSEPH FOTI	86800	0.00	1,021.77	1,021.77	_____ NOD
154	FREDDIE L FUDGE III	86801	0.00	1,085.63	1,085.63	_____ NOD
1742	TOMAS E GRANADO	86802	0.00	981.03	981.03	_____ NOD
60585	MICHAEL F JARA	86803	0.00	2,652.45	2,652.45	_____ NOD
415	KERRY PARKER	86804	0.00	1,000.45	1,000.45	_____ NOD
632	FAIRLESS L RUSHING SR	86805	0.00	1,049.81	1,049.81	_____ NOD
504	RICHARD C SORTER	86806	0.00	0.00	0.00	_____ NOD
30	MARION L SOWELL	86807	0.00	1,401.63	1,401.63	_____ NOD
60497	FRANK CALASCIONE	86808	0.00	2,164.31	2,164.31	_____ NOD
1993	CEYDA C GLOVER	86809	0.00	1,199.76	1,199.76	_____ NOD
151	DENNA F LAFFERTY	86810	0.00	1,394.08	1,394.08	_____ NOD
665	KRISTY M RUSSELL	86811	0.00	0.00	0.00	_____ NOD
108	KITTY L FIELDS	86812	0.00	2,551.43	2,551.43	_____ NOD
60589	RONA L MOHRENNE	86813	0.00	1,286.16	1,286.16	_____ NOD
60616	PATRICIA A BURGOS	86814	0.00	1,272.70	1,272.70	_____ NOD
961	SUSAN O FARNSWORTH	86815	0.00	1,139.95	1,139.95	_____ NOD
1011	KARL E HOLLEY	86816	0.00	2,872.31	2,872.31	_____ NOD
60567	THOMAS J MAHR	86817	0.00	1,396.91	1,396.91	_____ NOD
207	RHONDA K AUBUCHON	86818	0.00	1,264.40	1,264.40	_____ NOD
71	SANDRA M CASSELS	86819	0.00	1,430.93	1,430.93	_____ NOD
433	GUYLAINE T CHASSE	86820	0.00	1,099.70	1,099.70	_____ NOD
60526	JOSEPH E DUENNES	86821	0.00	2,187.90	2,187.90	_____ NOD
531	SARAH M GILL	86822	0.00	1,217.73	1,217.73	_____ NOD
251	SANDRA L PURVIS	86823	0.00	1,095.07	1,095.07	_____ NOD
242	KATHERINE E STEELE	86824	0.00	1,313.18	1,313.18	_____ NOD
60633	PAUL B DONOFRIO	86825	0.00	1,293.37	1,293.37	_____ NOD
60579	RICHARD S OBRIEN	86826	0.00	1,124.39	1,124.39	_____ NOD
994	DAVID A CASTO	86827	0.00	2,131.75	2,131.75	_____ NOD
60584	DAVID DAVIES	86828	0.00	1,524.19	1,524.19	_____ NOD
512	CHRISTINA A MORRISON	86829	0.00	1,267.06	1,267.06	_____ NOD
60621	KEVIN D NICHOLSON	86830	0.00	1,391.19	1,391.19	_____ NOD
60604	MICHELLE R BISHOP	86831	0.00	2,666.79	2,666.79	_____ NOD
60412	SUZANNE E HAMMER	86832	0.00	1,520.99	1,520.99	_____ NOD

Run No: 6065 / Period Ending Date: 03/07/20 / Check Date: 03/13/20

Employee No	Check Name	Check/NOD No	Check Amount	EFT Amount	Total	
60449	JENNIFER A HEMEON	86833	0.00	1,124.92	1,124.92	_____ NOD
999	DEBRA E HUNTON	86834	0.00	1,330.39	1,330.39	_____ NOD
60636	CHRISTOPHER C JOHNSON	86835	0.00	1,514.02	1,514.02	_____ NOD
60638	KAILA L KARABINOS	86836	0.00	1,359.88	1,359.88	_____ NOD
60426	DAVID R MENG	86837	0.00	1,928.67	1,928.67	_____ NOD
2002	DAVID E MYERS	86838	0.00	1,490.42	1,490.42	_____ NOD
60540	TYLER C ABBOTT	86839	0.00	1,092.77	1,092.77	_____ NOD
60566	MARCELLO N ADAMO	86840	0.00	1,213.64	1,213.64	_____ NOD
60605	MITCHELL H ALEXANDER	86841	0.00	1,221.73	1,221.73	_____ NOD
782	DAMON S ALLEN	86842	0.00	2,856.65	2,856.65	_____ NOD
60629	MARK A ALVAREZ	86843	0.00	974.96	974.96	_____ NOD
60488	TYLER G ANDRIUK	86844	0.00	1,154.59	1,154.59	_____ NOD
60573	RYAN M BAKER	86845	0.00	1,039.37	1,039.37	_____ NOD
930	MICHAEL D BASILE	86846	0.00	2,309.19	2,309.19	_____ NOD
60517	HENRY R BLACKWELDER	86847	0.00	1,157.45	1,157.45	_____ NOD
60485	JACOB A BOGUE	86848	0.00	962.78	962.78	_____ NOD
60602	RYAN R BRICKMEIER	86849	0.00	1,107.62	1,107.62	_____ NOD
60395	ADAM C BROWN-LANGLEY	86850	0.00	1,235.84	1,235.84	_____ NOD
878	BO B BURGESS	86851	0.00	1,741.98	1,741.98	_____ NOD
425	CHRISTOPHER B BURRIS	86852	0.00	1,668.16	1,668.16	_____ NOD
1968	HERLY J CACERES	86853	0.00	1,714.42	1,714.42	_____ NOD
60399	EDWARD C CAPPELLANO	86854	0.00	375.65	375.65	_____ NOD
60421	TYLER A CASSIDY	86855	0.00	1,095.94	1,095.94	_____ NOD
60630	GLEN F CERRATO	86856	0.00	1,005.14	1,005.14	_____ NOD
881	JUSTIN J COURTRIGHT	86857	0.00	1,877.15	1,877.15	_____ NOD
1971	ALEX L CRAMER	86858	0.00	1,416.66	1,416.66	_____ NOD
60628	DAWSON W CRUZ	86859	0.00	1,084.31	1,084.31	_____ NOD
1817	JOHN E DAVIS	86860	0.00	1,789.30	1,789.30	_____ NOD
779	ANTHONY E DAWKINS	86861	0.00	2,060.31	2,060.31	_____ NOD
60618	FRANK A DILORENZO	86862	0.00	883.65	883.65	_____ NOD
60398	KEVIN M DUCHARME	86863	0.00	1,387.49	1,387.49	_____ NOD
60544	DAVID J EINSTEDER	86864	0.00	1,312.85	1,312.85	_____ NOD
60432	CAMILYN ELISON	86865	0.00	1,309.58	1,309.58	_____ NOD
785	JEREMY J FEIL	86866	0.00	1,306.74	1,306.74	_____ NOD
60631	EMILY M FISHER	86867	0.00	1,222.43	1,222.43	_____ NOD
278	DONALD E FOSTER	86868	0.00	1,264.05	1,264.05	_____ NOD
450	BRYAN D FRITCHEY	86869	0.00	1,189.76	1,189.76	_____ NOD
1920	TIMOTHY J GAREMORE	86870	0.00	1,239.83	1,239.83	_____ NOD
60437	CODY J GERARD	86871	0.00	1,050.01	1,050.01	_____ NOD
60627	NOEL GONZALES JR	86872	0.00	1,203.59	1,203.59	_____ NOD
60452	TODD W GRINDROD JR	86873	0.00	1,207.86	1,207.86	_____ NOD
1953	WILLIAM L GROVE III	86874	0.00	1,332.58	1,332.58	_____ NOD
1881	AUBREY J HACKNEY	86875	0.00	1,646.53	1,646.53	_____ NOD
60515	NATHAN R HAMILTON	86876	0.00	1,177.18	1,177.18	_____ NOD
363	ROBERT J HANSON	86877	0.00	3,673.35	3,673.35	_____ NOD
758	WILLIE J HAUGABROOK JR	86878	0.00	1,943.54	1,943.54	_____ NOD
1950	BONNIE J HELMCAMP	86879	0.00	1,415.81	1,415.81	_____ NOD
60514	JOSEPH N HENIGSMITH	86880	0.00	931.81	931.81	_____ NOD
916	AMANDA D HERBY	86881	0.00	1,640.28	1,640.28	_____ NOD
1925	SCOTT M HESS	86882	0.00	1,791.87	1,791.87	_____ NOD
625	BRIAN A HOOGEWIND	86883	0.00	1,724.40	1,724.40	_____ NOD
942	MARCUS A HOWARD	86884	0.00	1,760.58	1,760.58	_____ NOD
60564	TYLER S IRVIN	86885	0.00	1,208.23	1,208.23	_____ NOD
618	HAROLD W JACQUES	86886	0.00	3,473.96	3,473.96	_____ NOD
60489	NICHOLAS R JOHNSON	86887	0.00	1,157.86	1,157.86	_____ NOD
889	NICHOLAS W JONES	86888	0.00	2,567.15	2,567.15	_____ NOD

Run No: 6065 / Period Ending Date: 03/07/20 / Check Date: 03/13/20

Employee No	Check Name	Check/NOD No	Check Amount	EFT Amount	Total	
60476	WILLIAM D JONES	86889	0.00	1,323.77	1,323.77	_____ NOD
60516	DOUGLAS P KAUFMAN	86890	0.00	1,138.15	1,138.15	_____ NOD
780	RALPH E KAYLOR	86891	0.00	2,541.00	2,541.00	_____ NOD
1921	MICHAEL W KLINE	86892	0.00	1,647.53	1,647.53	_____ NOD
897	MICHAEL A LAMING	86893	0.00	2,012.49	2,012.49	_____ NOD
1943	KEVIN D LANIER JR	86894	0.00	895.74	895.74	_____ NOD
860	MATTHEW R LONGEST	86895	0.00	1,850.67	1,850.67	_____ NOD
1892	ZACHARY S MAHANEY	86896	0.00	1,762.65	1,762.65	_____ NOD
964	JOSEPH A MARCHESE	86897	0.00	1,444.66	1,444.66	_____ NOD
60612	JUSTIN M MCCARTY	86898	0.00	1,095.52	1,095.52	_____ NOD
1928	NIKKI L MILLER-ROBERTSON	86899	0.00	1,566.00	1,566.00	_____ NOD
60392	BRIAN C MOLINA	86900	0.00	1,333.21	1,333.21	_____ NOD
609	BRADLEY J MORNINGSTAR	86901	0.00	2,559.23	2,559.23	_____ NOD
60613	MARTIN C MURRAY JR	86902	0.00	1,052.56	1,052.56	_____ NOD
1891	BRECON A MURTIE	86903	0.00	2,688.27	2,688.27	_____ NOD
794	FREDERICK A PITTS JR	86904	0.00	2,721.63	2,721.63	_____ NOD
60494	JOVANY PONCE DELEON	86905	0.00	1,401.15	1,401.15	_____ NOD
1944	GINNY K RAETTIG	86906	0.00	1,713.40	1,713.40	_____ NOD
60614	NECTOR J RAMOS ALAMEDA	86907	0.00	1,066.33	1,066.33	_____ NOD
60576	JAMES B RAMSAY	86908	0.00	1,101.24	1,101.24	_____ NOD
1945	CHRISTOPHER J RANKIN	86909	0.00	1,969.10	1,969.10	_____ NOD
389	JERRY A RHODEN	86910	0.00	2,771.30	2,771.30	_____ NOD
1977	JONATHAN W RICE	86911	0.00	1,794.34	1,794.34	_____ NOD
861	DANIEL C RIVENBARK	86912	0.00	1,306.83	1,306.83	_____ NOD
60611	JOSHUA J SCHULT	86913	0.00	946.61	946.61	_____ NOD
60507	BRANDON M SMIDDY	86914	0.00	1,457.43	1,457.43	_____ NOD
60570	ETHAN A SMITH	86915	0.00	1,150.17	1,150.17	_____ NOD
60393	ROBIN H SMITHGALL	86916	0.00	2,008.75	2,008.75	_____ NOD
60583	ADAM J SMOUSE	86917	0.00	1,717.42	1,717.42	_____ NOD
730	CASEY M STANBERRY	86918	0.00	3,199.22	3,199.22	_____ NOD
1926	NICHOLAS C STEELE	86919	0.00	1,556.12	1,556.12	_____ NOD
1955	JONATHAN TELLINI	86920	0.00	1,848.46	1,848.46	_____ NOD
367	JUSTIN G THALGOTT	86921	0.00	2,901.08	2,901.08	_____ NOD
1958	CHRISTOPHER A TRIANA	86922	0.00	1,855.41	1,855.41	_____ NOD
306	KARL B TUCKER	86923	0.00	2,430.34	2,430.34	_____ NOD
1838	DAVID M TUSCANI	86924	0.00	1,463.52	1,463.52	_____ NOD
60508	JUSTIN T URQUHART	86925	0.00	1,203.91	1,203.91	_____ NOD
60510	ANDREW B WEAVER	86926	0.00	2,192.74	2,192.74	_____ NOD
1825	RYAN F WILE	86927	0.00	1,807.16	1,807.16	_____ NOD
1951	MARK D WILLIAMS	86928	0.00	1,057.25	1,057.25	_____ NOD
60391	NORMAN S YOUNG JR	86929	0.00	1,727.46	1,727.46	_____ NOD
361	CAROLYN H ALLFREY	86930	0.00	1,098.93	1,098.93	_____ NOD
1962	KIM L RUMMELL	86931	0.00	1,548.00	1,548.00	_____ NOD
60620	JOHN K SOWELL	86932	0.00	1,525.23	1,525.23	_____ NOD
60420	MARK H ANDERSON	86933	0.00	2,015.42	2,015.42	_____ NOD
60559	MONICA J AUCI	86934	0.00	1,675.91	1,675.91	_____ NOD
60480	SARAH E BESSLER	86935	0.00	879.93	879.93	_____ NOD
60590	JAIME E DENTON	86936	0.00	1,323.57	1,323.57	_____ NOD
60639	ESAI R HERNANDEZ	86937	0.00	97.21	97.21	_____ NOD
60623	KATHLEEN K LINDSEY	86938	0.00	1,000.96	1,000.96	_____ NOD
60527	DAVID E NEWELL JR	86939	0.00	914.24	914.24	_____ NOD
60640	PHILIP D PACE	86940	0.00	1,060.78	1,060.78	_____ NOD
60538	TEALA R SOLTIS	86941	0.00	1,407.08	1,407.08	_____ NOD
60440	BRENDEN TUTTLE	86942	0.00	994.64	994.64	_____ NOD
60464	AARON W ADAMS	86943	0.00	948.39	948.39	_____ NOD
2001	DULIE J ARCHBELL	86944	0.00	813.60	813.60	_____ NOD

Run No: 6065 / Period Ending Date: 03/07/20 / Check Date: 03/13/20

Employee No	Check Name	Check/NOD No	Check Amount	EFT Amount	Total	
11	BASIL J BECKELHEIMER	86945	0.00	1,336.93	1,336.93	_____ NOD
184	MICHAEL T BRADY	86946	0.00	1,317.12	1,317.12	_____ NOD
1872	DAVID A BRINDAC	86947	0.00	1,040.17	1,040.17	_____ NOD
201	MICHAEL J BRYANT	86948	0.00	2,012.56	2,012.56	_____ NOD
1918	JIMMY A CARPENTER	86949	0.00	872.90	872.90	_____ NOD
60551	STEVEN D COHOON	86950	0.00	2,115.99	2,115.99	_____ NOD
60545	TITHONAS D DAVIS JR	86951	0.00	1,000.60	1,000.60	_____ NOD
198	TERRY D HAMM	86952	0.00	1,626.82	1,626.82	_____ NOD
145	WILLIAM L JOHNSON	86953	0.00	1,392.40	1,392.40	_____ NOD
1016	KEITH R JUDD	86954	0.00	919.08	919.08	_____ NOD
463	ANDREW W LEE	86955	0.00	1,189.16	1,189.16	_____ NOD
85	TIMOTHY E LEE	86956	0.00	1,704.68	1,704.68	_____ NOD
83	JOHN W MCCLAIN	86957	0.00	1,561.87	1,561.87	_____ NOD
60442	ROBERT E MOORE III	86958	0.00	546.13	546.13	_____ NOD
256	TIMOTHY D NAEGELE	86959	0.00	1,006.16	1,006.16	_____ NOD
49	ESLIE H OXENDINE	86960	0.00	1,662.83	1,662.83	_____ NOD
60562	SHAILESH J PATEL	86961	0.00	2,697.18	2,697.18	_____ NOD
142	BOBBY R RILEY	86962	0.00	1,321.65	1,321.65	_____ NOD
241	GREG N SEAY	86963	0.00	1,294.99	1,294.99	_____ NOD
50	STEPHEN A SEAY	86964	0.00	1,325.54	1,325.54	_____ NOD
60550	DEBORAH L SNYDER	86965	0.00	3,471.28	3,471.28	_____ NOD
549	JARED A STOKES	86966	0.00	1,076.80	1,076.80	_____ NOD
60617	WILLIAM D STRATTON	86967	0.00	813.29	813.29	_____ NOD
60558	DONALD WADE	86968	0.00	1,651.53	1,651.53	_____ NOD
455	MICHAEL J WALSH	86969	0.00	997.36	997.36	_____ NOD
60461	DARIEN A WILLISTON	86970	0.00	824.79	824.79	_____ NOD
60483	JOHN E WILSON II	86971	0.00	793.34	793.34	_____ NOD
110	STANFORD L LOVETT	86972	0.00	1,591.12	1,591.12	_____ NOD
1998	JESSE H ROMINE	86973	0.00	1,188.93	1,188.93	_____ NOD
60598	RODNEY K STEVENSON	86974	0.00	1,368.72	1,368.72	_____ NOD
210	MARSHALL D WINN	86975	0.00	1,268.39	1,268.39	_____ NOD
TOTAL PAYROLL CHECKS 0 NOD 199			0.00	299,168.63	299,168.63	_____

SUMTER BOARD OF COMMISSIONERS
Check/NOD Register

Run No: 6068 / Period Ending Date: 03/21/20 / Check Date: 03/27/20

Employee No	Check Name	Check/NOD No	Check Amount	EFT Amount	Total	
60543	JORDAN M BAILEY	86976	0.00	1,090.60	1,090.60	_____ NOD
60622	CELESTE M LARISEY	86977	0.00	1,081.99	1,081.99	_____ NOD
60414	EMILLY K MORRISON	86978	0.00	1,053.60	1,053.60	_____ NOD
73	JOHNNY R RICE JR	86979	0.00	1,033.60	1,033.60	_____ NOD
60529	EDWARD L SCANLON	86980	0.00	1,348.45	1,348.45	_____ NOD
705	REBECCA J SEGREST	86981	0.00	2,102.78	2,102.78	_____ NOD
1961	BOBBIE J TODD	86982	0.00	1,271.66	1,271.66	_____ NOD
60525	JACQUELINE A VALDEZ	86983	0.00	1,274.48	1,274.48	_____ NOD
595	BRADLEY S ARNOLD	86984	0.00	5,567.03	5,567.03	_____ NOD
2	GARRY D BREEDEN	86985	0.00	1,640.71	1,640.71	_____ NOD
808	DONALD L BURGESS	86986	0.00	1,514.10	1,514.10	_____ NOD
1836	ALBERT A BUTLER JR	86987	0.00	1,756.35	1,756.35	_____ NOD
143	BETTY E COMIS	86988	0.00	1,227.28	1,227.28	_____ NOD
157	JESSICA R DOUGLAS	86989	0.00	939.28	939.28	_____ NOD
667	DOUG D GILPIN	86990	0.00	1,550.31	1,550.31	_____ NOD
998	STEPHEN J KENNEDY	86991	0.00	3,389.79	3,389.79	_____ NOD
60637	TERESA F MAXWELL	86992	0.00	966.99	966.99	_____ NOD
60603	CHARLENE M PITTMAN	86993	0.00	146.06	146.06	_____ NOD
60439	STEPHEN C PRINTZ	86994	0.00	1,881.68	1,881.68	_____ NOD
746	BRENDA L SCHLAK	86995	0.00	1,167.72	1,167.72	_____ NOD
829	LESLIE M SMITH	86996	0.00	1,741.59	1,741.59	_____ NOD
1848	BRUCE M ATKINSON	86997	0.00	1,677.45	1,677.45	_____ NOD
60642	SHAWN C CREMEANS	86998	0.00	1,004.91	1,004.91	_____ NOD
337	LEROY L EDWARDS	86999	0.00	1,335.53	1,335.53	_____ NOD
60619	JOSEPH FOTI	87000	0.00	920.97	920.97	_____ NOD
154	FREDDIE L FUDGE III	87001	0.00	1,171.46	1,171.46	_____ NOD
1742	TOMAS E GRANADO	87002	0.00	999.11	999.11	_____ NOD
60585	MICHAEL F JARA	87003	0.00	2,652.44	2,652.44	_____ NOD
415	KERRY PARKER	87004	0.00	1,000.45	1,000.45	_____ NOD
632	FAIRLESS L RUSHING SR	87005	0.00	1,125.93	1,125.93	_____ NOD
504	RICHARD C SORTER	87006	0.00	0.00	0.00	_____ NOD
30	MARION L SOWELL	87007	0.00	1,349.45	1,349.45	_____ NOD
60497	FRANK CALASCIONE	87008	0.00	2,164.31	2,164.31	_____ NOD
1993	CEYDA C GLOVER	87009	0.00	1,315.22	1,315.22	_____ NOD
151	DENNA F LAFFERTY	87010	0.00	1,394.07	1,394.07	_____ NOD
665	KRISTY M RUSSELL	87011	0.00	0.00	0.00	_____ NOD
108	KITTY L FIELDS	87012	0.00	2,551.42	2,551.42	_____ NOD
60589	RONA L MOHRENNE	87013	0.00	1,218.95	1,218.95	_____ NOD
60616	PATRICIA A BURGOS	87014	0.00	1,272.70	1,272.70	_____ NOD
961	SUSAN O FARNSWORTH	87015	0.00	1,139.94	1,139.94	_____ NOD
1011	KARL E HOLLEY	87016	0.00	2,872.29	2,872.29	_____ NOD
60567	THOMAS J MAHR	87017	0.00	1,396.90	1,396.90	_____ NOD
207	RHONDA K AUBUCHON	87018	0.00	1,264.40	1,264.40	_____ NOD
71	SANDRA M CASSELS	87019	0.00	1,430.93	1,430.93	_____ NOD
433	GUYLAINE T CHASSE	87020	0.00	1,099.68	1,099.68	_____ NOD
60526	JOSEPH E DUENNES	87021	0.00	2,187.90	2,187.90	_____ NOD
531	SARAH M GILL	87022	0.00	1,217.73	1,217.73	_____ NOD
251	SANDRA L PURVIS	87023	0.00	1,095.08	1,095.08	_____ NOD
242	KATHERINE E STEELE	87024	0.00	1,313.18	1,313.18	_____ NOD
60633	PAUL B DONOFRIO	87025	0.00	1,293.35	1,293.35	_____ NOD
60579	RICHARD S OBRIEN	87026	0.00	1,124.40	1,124.40	_____ NOD
994	DAVID A CASTO	87027	0.00	2,131.74	2,131.74	_____ NOD
60584	DAVID DAVIES	87028	0.00	1,524.18	1,524.18	_____ NOD
512	CHRISTINA A MORRISON	87029	0.00	1,267.05	1,267.05	_____ NOD
60621	KEVIN D NICHOLSON	87030	0.00	1,391.19	1,391.19	_____ NOD
60604	MICHELLE R BISHOP	87031	0.00	2,666.79	2,666.79	_____ NOD

Run No: 6068 / Period Ending Date: 03/21/20 / Check Date: 03/27/20

Employee No	Check Name	Check/NOD No	Check Amount	EFT Amount	Total	
60412	SUZANNE E HAMMER	87032	0.00	1,513.25	1,513.25	_____ NOD
60449	JENNIFER A HEMEON	87033	0.00	193.63	193.63	_____ NOD
999	DEBRA E HUNTON	87034	0.00	1,330.38	1,330.38	_____ NOD
60636	CHRISTOPHER C JOHNSON	87035	0.00	1,514.01	1,514.01	_____ NOD
60638	KAILA L KARABINOS	87036	0.00	1,359.89	1,359.89	_____ NOD
2002	DAVID E MYERS	87037	0.00	1,490.41	1,490.41	_____ NOD
60540	TYLER C ABBOTT	87038	0.00	970.50	970.50	_____ NOD
60566	MARCELLO N ADAMO	87039	0.00	1,307.89	1,307.89	_____ NOD
60605	MITCHELL H ALEXANDER	87040	0.00	985.32	985.32	_____ NOD
782	DAMON S ALLEN	87041	0.00	2,856.66	2,856.66	_____ NOD
60629	MARK A ALVAREZ	87042	0.00	1,163.82	1,163.82	_____ NOD
60488	TYLER G ANDRIUK	87043	0.00	1,077.88	1,077.88	_____ NOD
60573	RYAN M BAKER	87044	0.00	891.75	891.75	_____ NOD
930	MICHAEL D BASILE	87045	0.00	1,704.94	1,704.94	_____ NOD
60517	HENRY R BLACKWELDER	87046	0.00	1,090.93	1,090.93	_____ NOD
60485	JACOB A BOGUE	87047	0.00	1,208.37	1,208.37	_____ NOD
60602	RYAN R BRICKMEIER	87048	0.00	1,051.98	1,051.98	_____ NOD
60395	ADAM C BROWN-LANGLEY	87049	0.00	1,545.10	1,545.10	_____ NOD
878	BO B BURGESS	87050	0.00	1,586.39	1,586.39	_____ NOD
425	CHRISTOPHER B BURRIS	87051	0.00	1,428.89	1,428.89	_____ NOD
1968	HERLY J CACERES	87052	0.00	1,161.25	1,161.25	_____ NOD
60399	EDWARD C CAPPELLANO	87053	0.00	960.59	960.59	_____ NOD
60421	TYLER A CASSIDY	87054	0.00	1,416.48	1,416.48	_____ NOD
60630	GLEN F CERRATO	87055	0.00	1,191.86	1,191.86	_____ NOD
881	JUSTIN J COURTRIGHT	87056	0.00	1,576.94	1,576.94	_____ NOD
1971	ALEX L CRAMER	87057	0.00	1,291.78	1,291.78	_____ NOD
60628	DAWSON W CRUZ	87058	0.00	966.13	966.13	_____ NOD
1817	JOHN E DAVIS	87059	0.00	2,023.37	2,023.37	_____ NOD
779	ANTHONY E DAWKINS	87060	0.00	2,318.49	2,318.49	_____ NOD
60618	FRANK A DILORENZO	87061	0.00	1,085.01	1,085.01	_____ NOD
60398	KEVIN M DUCHARME	87062	0.00	2,522.60	2,522.60	_____ NOD
60544	DAVID J EINSTEDER	87063	0.00	1,609.13	1,609.13	_____ NOD
60432	CAMILYN ELISON	87064	0.00	1,462.30	1,462.30	_____ NOD
785	JEREMY J FEIL	87065	0.00	1,603.99	1,603.99	_____ NOD
60631	EMILY M FISHER	87066	0.00	1,089.90	1,089.90	_____ NOD
278	DONALD E FOSTER	87067	0.00	1,443.04	1,443.04	_____ NOD
450	BRYAN D FRITCHEY	87068	0.00	1,435.03	1,435.03	_____ NOD
1920	TIMOTHY J GAREMORE	87069	0.00	1,071.43	1,071.43	_____ NOD
60437	CODY J GERARD	87070	0.00	1,114.48	1,114.48	_____ NOD
60627	NOEL GONZALES JR	87071	0.00	1,057.79	1,057.79	_____ NOD
60452	TODD W GRINDROD JR	87072	0.00	1,110.13	1,110.13	_____ NOD
1953	WILLIAM L GROVE III	87073	0.00	1,135.82	1,135.82	_____ NOD
1881	AUBREY J HACKNEY	87074	0.00	1,812.24	1,812.24	_____ NOD
60515	NATHAN R HAMILTON	87075	0.00	1,451.58	1,451.58	_____ NOD
363	ROBERT J HANSON	87076	0.00	3,673.35	3,673.35	_____ NOD
758	WILLIE J HAUGABROOK JR	87077	0.00	2,177.43	2,177.43	_____ NOD
1950	BONNIE J HELMCAMP	87078	0.00	1,400.30	1,400.30	_____ NOD
60514	JOSEPH N HENIGSMITH	87079	0.00	1,777.31	1,777.31	_____ NOD
916	AMANDA D HERBY	87080	0.00	716.39	716.39	_____ NOD
1925	SCOTT M HESS	87081	0.00	1,448.00	1,448.00	_____ NOD
625	BRIAN A HOOGEWIND	87082	0.00	2,036.18	2,036.18	_____ NOD
942	MARCUS A HOWARD	87083	0.00	2,037.98	2,037.98	_____ NOD
60564	TYLER S IRVIN	87084	0.00	1,051.53	1,051.53	_____ NOD
618	HAROLD W JACQUES	87085	0.00	3,036.99	3,036.99	_____ NOD
60489	NICHOLAS R JOHNSON	87086	0.00	1,370.83	1,370.83	_____ NOD
889	NICHOLAS W JONES	87087	0.00	1,730.20	1,730.20	_____ NOD

Run No: 6068 / Period Ending Date: 03/21/20 / Check Date: 03/27/20

Employee No	Check Name	Check/NOD No	Check Amount	EFT Amount	Total	
60476	WILLIAM D JONES	87088	0.00	1,157.64	1,157.64	_____ NOD
60516	DOUGLAS P KAUFMAN	87089	0.00	999.05	999.05	_____ NOD
780	RALPH E KAYLOR	87090	0.00	2,246.29	2,246.29	_____ NOD
1921	MICHAEL W KLINE	87091	0.00	1,484.91	1,484.91	_____ NOD
897	MICHAEL A LAMING	87092	0.00	1,674.22	1,674.22	_____ NOD
860	MATTHEW R LONGEST	87093	0.00	1,794.36	1,794.36	_____ NOD
1892	ZACHARY S MAHANEY	87094	0.00	1,946.64	1,946.64	_____ NOD
964	JOSEPH A MARCHESE	87095	0.00	1,607.12	1,607.12	_____ NOD
60612	JUSTIN M MCCARTY	87096	0.00	953.09	953.09	_____ NOD
1928	NIKKI L MILLER-ROBERTSON	87097	0.00	1,318.26	1,318.26	_____ NOD
60392	BRIAN C MOLINA	87098	0.00	1,204.23	1,204.23	_____ NOD
609	BRADLEY J MORNINGSTAR	87099	0.00	1,778.04	1,778.04	_____ NOD
60613	MARTIN C MURRAY JR	87100	0.00	912.30	912.30	_____ NOD
1891	BRECON A MURTIE	87101	0.00	4,227.39	4,227.39	_____ NOD
794	FREDERICK A PITTS JR	87102	0.00	2,504.51	2,504.51	_____ NOD
60494	JOVANY PONCE DELEON	87103	0.00	1,428.93	1,428.93	_____ NOD
1944	GINNY K RAETTIG	87104	0.00	1,548.70	1,548.70	_____ NOD
60614	NECTOR J RAMOS ALAMEDA	87105	0.00	967.89	967.89	_____ NOD
60576	JAMES B RAMSAY	87106	0.00	993.97	993.97	_____ NOD
1945	CHRISTOPHER J RANKIN	87107	0.00	2,212.12	2,212.12	_____ NOD
389	JERRY A RHODEN	87108	0.00	2,599.53	2,599.53	_____ NOD
1977	JONATHAN W RICE	87109	0.00	1,066.40	1,066.40	_____ NOD
861	DANIEL C RIVENBARK	87110	0.00	1,146.24	1,146.24	_____ NOD
60611	JOSHUA J SCHULT	87111	0.00	1,128.85	1,128.85	_____ NOD
60507	BRANDON M SMIDDY	87112	0.00	1,176.78	1,176.78	_____ NOD
60570	ETHAN A SMITH	87113	0.00	1,001.43	1,001.43	_____ NOD
60393	ROBIN H SMITHGALL	87114	0.00	1,703.73	1,703.73	_____ NOD
60583	ADAM J SMOUSE	87115	0.00	1,295.07	1,295.07	_____ NOD
730	CASEY M STANBERRY	87116	0.00	4,286.07	4,286.07	_____ NOD
1926	NICHOLAS C STEELE	87117	0.00	1,235.42	1,235.42	_____ NOD
1955	JONATHAN TELLINI	87118	0.00	2,510.45	2,510.45	_____ NOD
367	JUSTIN G THALGOTT	87119	0.00	2,901.07	2,901.07	_____ NOD
1958	CHRISTOPHER A TRIANA	87120	0.00	1,406.11	1,406.11	_____ NOD
306	KARL B TUCKER	87121	0.00	2,772.29	2,772.29	_____ NOD
1838	DAVID M TUSCANI	87122	0.00	1,294.69	1,294.69	_____ NOD
60508	JUSTIN T URQUHART	87123	0.00	1,049.63	1,049.63	_____ NOD
60510	ANDREW B WEAVER	87124	0.00	1,645.56	1,645.56	_____ NOD
1825	RYAN F WILE	87125	0.00	1,209.93	1,209.93	_____ NOD
1951	MARK D WILLIAMS	87126	0.00	1,210.13	1,210.13	_____ NOD
60391	NORMAN S YOUNG JR	87127	0.00	1,446.07	1,446.07	_____ NOD
361	CAROLYN H ALLFREY	87128	0.00	1,098.92	1,098.92	_____ NOD
1962	KIM L RUMMELL	87129	0.00	1,547.99	1,547.99	_____ NOD
60620	JOHN K SOWELL	87130	0.00	1,166.57	1,166.57	_____ NOD
60420	MARK H ANDERSON	87131	0.00	1,698.88	1,698.88	_____ NOD
60559	MONICA J AUCI	87132	0.00	1,675.92	1,675.92	_____ NOD
60480	SARAH E BESSLER	87133	0.00	917.89	917.89	_____ NOD
60590	JAIME E DENTON	87134	0.00	1,099.18	1,099.18	_____ NOD
60648	KIMBERLEE D HILL	87135	0.00	710.67	710.67	_____ NOD
60623	KATHLEEN K LINDSEY	87136	0.00	903.83	903.83	_____ NOD
60527	DAVID E NEWELL JR	87137	0.00	1,078.84	1,078.84	_____ NOD
60640	PHILIP D PACE	87138	0.00	928.92	928.92	_____ NOD
60538	TEALA R SOLTIS	87139	0.00	1,226.34	1,226.34	_____ NOD
60440	BRENDEN TUTTLE	87140	0.00	842.68	842.68	_____ NOD
60464	AARON W ADAMS	87141	0.00	948.38	948.38	_____ NOD
2001	DULIE J ARCHBELL	87142	0.00	813.60	813.60	_____ NOD
11	BASIL J BECKELHEIMER	87143	0.00	1,336.94	1,336.94	_____ NOD

Run No: 6068 / Period Ending Date: 03/21/20 / Check Date: 03/27/20

Employee No	Check Name	Check/NOD No	Check Amount	EFT Amount	Total	
184	MICHAEL T BRADY	87144	0.00	1,317.13	1,317.13	_____ NOD
1872	DAVID A BRINDAC	87145	0.00	1,040.17	1,040.17	_____ NOD
201	MICHAEL J BRYANT	87146	0.00	2,012.55	2,012.55	_____ NOD
1918	JIMMY A CARPENTER	87147	0.00	872.92	872.92	_____ NOD
60551	STEVEN D COHOON	87148	0.00	1,949.14	1,949.14	_____ NOD
198	TERRY D HAMM	87149	0.00	1,355.92	1,355.92	_____ NOD
145	WILLIAM L JOHNSON	87150	0.00	1,392.41	1,392.41	_____ NOD
1016	KEITH R JUDD	87151	0.00	899.10	899.10	_____ NOD
463	ANDREW W LEE	87152	0.00	1,361.93	1,361.93	_____ NOD
85	TIMOTHY E LEE	87153	0.00	1,704.67	1,704.67	_____ NOD
83	JOHN W MCCLAIN	87154	0.00	1,440.85	1,440.85	_____ NOD
60442	ROBERT E MOORE III	87155	0.00	613.02	613.02	_____ NOD
256	TIMOTHY D NAEGELE	87156	0.00	1,006.16	1,006.16	_____ NOD
49	ESLIE H OXENDINE	87157	0.00	1,534.92	1,534.92	_____ NOD
60562	SHAILESH J PATEL	87158	0.00	2,697.19	2,697.19	_____ NOD
142	BOBBY R RILEY	87159	0.00	1,407.05	1,407.05	_____ NOD
241	GREG N SEAY	87160	0.00	1,294.97	1,294.97	_____ NOD
50	STEPHEN A SEAY	87161	0.00	1,325.54	1,325.54	_____ NOD
60550	DEBORAH L SNYDER	87162	0.00	3,471.28	3,471.28	_____ NOD
549	JARED A STOKES	87163	0.00	1,076.81	1,076.81	_____ NOD
60617	WILLIAM D STRATTON	87164	0.00	797.13	797.13	_____ NOD
60558	DONALD WADE	87165	0.00	1,651.53	1,651.53	_____ NOD
455	MICHAEL J WALSH	87166	0.00	976.92	976.92	_____ NOD
60461	DARIEN A WILLISTON	87167	0.00	809.54	809.54	_____ NOD
60483	JOHN E WILSON II	87168	0.00	778.51	778.51	_____ NOD
110	STANFORD L LOVETT	87169	0.00	1,591.13	1,591.13	_____ NOD
1998	JESSE H ROMINE	87170	0.00	1,188.92	1,188.92	_____ NOD
60598	RODNEY K STEVENSON	87171	0.00	1,368.72	1,368.72	_____ NOD
210	MARSHALL D WINN	87172	0.00	1,268.40	1,268.40	_____ NOD
TOTAL PAYROLL CHECKS 0 NOD 197			0.00	291,202.18	291,202.18	_____

DRAFT

WORKSHOP MEETING | BOARD OF COUNTY COMMISSIONERS | APRIL 21, 2020

The Board of Sumter County Commissioners (BOCC/Board) convened in a workshop meeting on Tuesday, April 21, 2020, at the Sumter County Service Center in Wildwood, Florida, with the following members present to wit: Al Butler, 2nd Vice Chairman, District No. 1 ; Doug Gilpin, District No. 2 (via remote access); Don Burgess, District No. 3; Garry Breeden, Vice Chairman, District No. 4 (via remote access); and Steve Printz, Chairman, District No. 5 (via remote access). The following individuals were also present and acting in their respective official capacities: Bradley Arnold, County Administrator; William Kleinsorge, Finance Director (via remote access); and Caroline Alrestimawi, Deputy Clerk. Commissioner Printz called the meeting to order at 5:04 p.m. The complete audio recording of this meeting is available by request through the Clerk's Website - www.sumterclerk.com.

1. Public Forum

There was no input from the public, as no public was present.

2. Development Services Update and CA "Support" Department Update

Bradley Arnold, County Administrator, noted that the May workshop will address all of the direction provided by the Board during the workshops throughout the current year. The May workshop will also address preliminary budget numbers. Today's workshop covers different aspects of the BOCC's operations. Mr. Arnold discussed the attached presentation. The Commissioners provided commentary regarding the presentation.

4-21-20-April 2020 Workshop Presentation

3. Adjourn

The meeting adjourned at 5:53 p.m.

DRAFT

SPECIAL CALLED MEETING | BOARD OF COUNTY COMMISSIONERS | MAY 5, 2020

The Board of Sumter County Commissioners (BOCC/Board) convened in a special called meeting on Tuesday, May 5, 2020, at the Sumter County Service Center in Wildwood, Florida, with the following members present to wit: Al Butler, 2nd Vice Chairman, District No. 1; Doug Gilpin, District No. 2; Don Burgess, District No. 3; Garry Breeden, Vice Chairman, District No. 4 (via remote access); and Steve Printz, Chairman, District No. 5 (via remote access). The following individuals were also present and acting in their respective official capacities: Bradley Arnold, County Administrator; William Kleinsorge, Finance Director (via remote access); and Caroline Alrestimawi, Deputy Clerk. Commissioner Printz called the meeting to order at 4:00 p.m. The complete audio recording of this meeting is available by request through the Clerk's Website - www.sumterclerk.com.

1. State of Emergency Declaration Extension Sumter County Board of County Commissioners (Staff Recommends Approval)

Bradley Arnold, County Administrator, provided a COVID-19 update for Sumter County. Sumter County has 237 cumulative confirmed positive cases with 115 removed from the isolation list. The Governor is considering two statistics during the process of reopening Florida: hospitalization rate and positive rate. Both of these statistics are going down. Sumter County has 6 hospitalizations. The jump in cumulative numbers over the past couple days is due to an outbreak at the state prison. The Health Department is working with the medical professionals at the state prison to make improvements. There is a cumulative number of 14 deaths associated with Sumter County. As of Monday, the County has begun the reopening process. Two library branches have reopened, with limited services: Pinellas and Belvedere. Development Services has also reopened for in person meetings, as well as the Supervisor of Elections in Wildwood. The County will continue to monitor the numbers so that the County is ready to move on to the next phase whenever the Governor is ready. The Commissioners provided questions and/or comments.

5-5-2020 Local State of Emergency Ext

Commissioner Breeden moved, with a second by Commissioner Burgess, to approve the State of Emergency Declaration Extension Sumter County Board of County Commissioners. The motion carried 5 - 0.

2. Adjourn

The meeting adjourned at 4:06 p.m.

SUMTER COUNTY BOARD OF COUNTY COMMISSIONERS
EXECUTIVE SUMMARY

SUBJECT: Affordable Housing Advisory Committee (AHAC) Vacancy (Board's Option).

REQUESTED ACTION: **Board's Option**

Meeting Type: Regular Meeting **DATE OF MEETING:** **5/12/2020**

CONTRACT: ☒ N/A Vendor/Entity:
Effective Date: Termination Date:
Managing Division / Dept. **Administrative Services**

BUDGET IMPACT:
FUNDING SOURCE:

Type: N/A **EXPENDITURE ACCOUNT:**

HISTORY/FACTS/ISSUES:

The purpose of the AHAC is to:

- Review the established policies and procedures, ordinances, land development regulations, and adopted local government comprehensive plan of the appointing local government.
- Recommend specific actions or initiatives to the Board of County Commissioners to encourage or facilitate affordable housing while protecting the ability of the property to appreciate in value.
- Serve as the Citizen Advisory Task Force (CATF) for Community Development Block Grants.

The committee shall follow the guidelines mandated in Section 420.9076 and Section 290.0426, Florida Statutes and Rule Chapter 73C-23, Florida Administrative Code.

The governing board of a county or municipality shall appoint the members of the affordable housing advisory committee. Pursuant to the terms of any Interlocal agreement, a county and municipality may create and jointly appoint an advisory committee. The local action adopted pursuant to S. 420.9076, which creates the advisory committee and appoints the advisory committee members must name at least 8 but not more than 11 committee members and specify their terms. The committee must consist of one representative from at least six of the categories below:

(a) A citizen who is actively engaged in the residential home building industry in connection with affordable housing.
(b) A citizen who is actively engaged in the banking or mortgage industry in connection with affordable housing.
(c) A citizen who is a representative of those areas of labor actively engaged in home building in connection with affordable housing.
(d) A citizen who is actively engaged as an advocate for low-income persons in connection with affordable housing.
(e) A citizen who is actively engaged as a for-profit profit provider of affordable housing.
(f) A citizen who is actively engaged as a not-for-profit provider of affordable housing.
(g) A citizen who is actively engaged as a real estate professional in connection with affordable

housing.
(h) A citizen who actively serves on the local planning agency pursuant to S.163.3174. If the local planning agency is comprised of the governing board of the county or municipality, the governing board may appoint a designee who is knowledgeable in the local planning process.
(i) A citizen who resides within the jurisdiction of the local governing body making the appointments.
(j) A citizen who represents employers within the jurisdiction.
(k) A citizen who represents essential services personnel, as defined in the local housing assistance plan.

Triennially, the advisory committee shall review the established policies and procedures, ordinances, land development regulations, and adopted local government comprehensive plan of the appointing local government and shall recommend specific actions or initiatives to encourage or facilitate affordable housing while protecting the ability of the property to appreciate in value. The recommendations may include the modification or repeal of existing policies, procedures, ordinances, regulations, ordinances, or plan provisions; the creation of exceptions applicable to affordable housing; or the adoption of new policies, procedures, regulations, ordinances, or plan provisions, including recommendations to amend the local government comprehensive plan and corresponding regulations, ordinances and other policies. At a minimum, each advisory committee shall submit a report to the local governing body that includes recommendations on, and triennially thereafter evaluates the implementation of, affordable housing incentives in the following area:
(a) The processing of approvals of development orders or permits for affordable housing projects is expedited to a greater degree than other projects, as provided in S. 163.3177 (6) (f) 3.
(b) The modification of impact-fee requirements, including reduction or waiver of fees and alternative methods of fee payment for affordable housing.
(c) The allowance of flexibility in densities for affordable housing.
(d) The reservation of infrastructure capacity for housing for very-low-income persons, low-income persons, and moderate-income persons.
(e) The allowance of affordable accessory residential units residential zoning districts.
(f) The reduction of parking and setback requirements for affordable housing.
(g) The allowance of flexible lot configurations, including zero-lot-line configurations, for affordable housing.
(h) The modification of street requirements for affordable housing.
(i) The establishment of a process by which a local government considers, before adoption, policies, procedures, ordinances, regulations, or plan provisions that increase the cost of housing.
(j) The preparation of a printed inventory of locally owned public lands suitable for affordable housing.
(k) The support of development near transportation hubs and major employment centers and mixed-used developments.

Sector Position	Status	Term
Building Industry	Diana Couillard	7/12/2018 - 7/12/2020
Essential Service Personnel	Robert Hanson	7/12/2018 - 7/12/2020
For-profit Housing Provider	Priscilla Lewis	7/12/2018 - 7/12/2020
Sumter County Resident	Karen C. Davis	7/12/2018 - 7/12/2020
Areas of Labor Activity	Vacant	7/12/2019 - 7/12/2021
Banking Industry	Samantha Crane	7/12/2019 - 7/12/2021
Low Income Advocate	Sandra Woodard	7/12/2019 - 7/12/2021
Non-profit Housing Provider	Gene Barton	7/12/2019 - 7/12/2021
Real Estate Professional	Danny Smith	7/12/2019 - 7/12/2021
Local Planning Agency	Karl Holley	7/12/2019 - 7/12/2021
Employer Representative	Matthew Yoder	7/12/2019 - 7/12/2021
Alternate	Michelle Purl	7/12/2018 - 7/12/2020

Prepared by:	**Charlene Pittman**	**Grammarly Check**	☒

Sec. 12-47. - Sumter County Affordable Housing Advisory Committee.

(a) *Establishment, purpose and intent.* There is hereby created the Sumter County Affordable Housing Advisory Committee (hereinafter referred to as the "committee" or "advisory committee"), whose members shall be appointed by resolution of the board of county commissioners. The local action adopted pursuant to F.S. § 420.9072 which creates the advisory committee and appoints the advisory committee members must name at least eight (8) but not more than eleven (11) committee members and specify their terms. Six (6) members shall constitute a quorum. The committee may not take formal actions unless a quorum is present, but may meet to hear presentations if duly noticed. The committee must consist of one (1) representative from at least six (6) of the categories listed below:

(1) A citizen who is actively engaged in the residential home building industry in connection with affordable housing;

(2) A citizen who is actively engaged in the banking or mortgage banking industry in connection with affordable housing;

(3) A citizen who is a representative of those areas of labor engaged in home building in connection with affordable housing;

(4) A citizen who is designated as an advocate for low-income persons in connection with affordable housing;

(5) A citizen who is a for-profit provider of affordable housing;

(6) A citizen who is a not-for-profit provider of affordable housing;

(7) A citizen who is actively engaged as a real estate professional in connection with affordable housing;

(8) A citizen who actively serves on the local planning agency of the county;

(9) A citizen chosen by the board of county commissioners from any profession or occupation;

(10) A citizen who represents employers within the jurisdiction;

(11) A citizen who represents essential services personnel, as defined in the local housing assistance plan.

All members must be full-time residents of Sumter County, Florida.

With regard to the occupation requirements noted above, if an individual cannot be found in the noted occupations that has a "connection with affordable housing," then such and individual may be chosen without regard to any connection with affordable housing.

(b) *Term.* Six (6) initial members shall serve three-year terms following their appointment, while the remaining initial members shall serve two-year terms following their appointment. All members or their successors may thereafter be appointed for two-year terms at the sole discretion of the board of county commissioners. If a member is unable to finish his or her term, his or her replacement shall serve the remainder of the departed member's existing term before being eligible for an appointment to a new two-year term. Alternates shall serve a term of two (2) years.

(c) *Meetings.* Meetings shall be held monthly for the first year of committee existence and quarterly, or more frequently, as necessary thereafter. The committee shall comply with the Florida Government in the Sunshine Law, the Florida Public Records Laws including F.S. ch. 119, and the special provisions regarding notice of plan considerations found in F.S. ch. 420. Minutes of the meeting will be kept by Sumter County staff and the meetings shall be recorded via audio recording.

(d) *Officers.* The committee shall annually elect a chairperson, vice chairperson, and such other officers as it deems necessary. The chairperson is charged with the duty of conducting the meeting in a manner consistent with Florida law and Roberts Rules of Order.

(e) *Support.* Administrative and facility support for advisory committee shall be provided by the board of county commissioners and housing services staff.

(f) *Duties.* The advisory committee shall have the following duties:

(1) Review established policies and procedures, ordinances, land development regulations, and the adopted county comprehensive plan, and recommend specific initiatives to encourage or facilitate affordable housing while protecting the ability of the property to appreciate in value. The recommendations may include the modification or repeal of existing policies, procedures, ordinances, regulations or plan provisions; those creations of exceptions applicable to affordable housing; or the adoption of new policies, procedures, regulations, ordinances or plan provisions. Triennially, the advisory committee shall make recommendations on affordable housing incentives in the following areas to the board of county commissioners:

a. The processing of approvals of development orders or permits, for affordable housing projects is expedited to a greater degree than other projects, as provided in F.S. § 163.3177(6)(f)3.

b. The modification of impact-fee requirements, including reduction or waiver of fees and alternative methods of fee payment for affordable housing.

c. The allowance of flexibility in densities for affordable housing.

d. The reservation of infrastructure capacity for housing for very-low-income persons, low-income persons, and moderate-income persons.

e. The allowance of affordable accessory residential units in residential zoning districts.

f. The reduction of parking and setback requirements for affordable housing.

g. The allowance of flexible lot configurations, including zero-lot-line configurations for affordable housing.

h. The modification of street requirements for affordable housing.

i. The establishment of a process by which a local government considers, before adoption, policies, procedures, ordinances, regulations, or plan provisions that increase the cost of housing.

j. The preparation of a printed inventory of locally owned public lands suitable for affordable housing.

k. The support of development near transportation hubs and major employment centers and mixed-use developments.

The committee recommendations must also include other affordable housing incentives identified by the advisory committee. The committee shall make recommendations approved by a majority of its membership at a public hearing. Notice of the time, date and place of the public hearing of the advisory committee to adopt final affordable housing incentive recommendations shall be advertised in a newspaper of greatest general circulation in Sumter County.

(2) The committee shall serve as the Community Development Block Grant Citizen Advisory Task Force (CATF), pursuant to F.S. § 290.046. The committee shall meet as the CATF as needed to review and monitor Community Development Block Grant projects consistent with the requirements of 73C-23.0041(5)(d), Florida Administrative Code.

(Ord. No. 2015-12, § 1(Exh. A), 7-28-15; Ord. No. 2016-07, § 3(Exh. A), 5-24-16)

SUMTER COUNTY BOARD OF COUNTY COMMISSIONERS
EXECUTIVE SUMMARY

SUBJECT: Construction Industry Licensing/Fire Code Board of Appeals Vacancy (Board's Option).

REQUESTED ACTION: **Board's Option**

Meeting Type: Regular Meeting **DATE OF MEETING:** **5/12/2020**

CONTRACT: ☒ N/A Vendor/Entity: N/A
Effective Date: 11/15/2018 Termination Date: 11/15/2021
Managing Division / Dept: **Building & Code / Development Services**

BUDGET IMPACT:
FUNDING SOURCE:
Type: N/A **EXPENDITURE ACCOUNT:**

HISTORY/FACTS/ISSUES:

The Construction Industry Licensing/Fire Code Board of Appeals evaluates and approves/disapproves contractors for local licensing. The Construction Industry Licensing/Fire Code Board of Appeals acts in the capacity of an impartial hearing board for complaints against licensed contractors and disciplines licensed contractors when warranted. The Construction Industry Licensing/Fire Code Board of Appeals also hears reports of unlicensed contractor activity and refers reports to the Commission or State Attorney's Office when warranted.
Appointment: The Board shall consist of five (5) members appointed by the Board. Each member shall be a legal, bona fide resident of Sumter County, Florida, and meet all other appointee requirements established by the Board. All contractors appointed shall hold an active Sumter County Competency Card or a Florida Certified License.

Sector	Position Status	Term
Architect	Christopher Bowers	11/15/2018 - 11/15/2021
Business Person	Eleazar Flores	11/15/2018 - 11/15/2021
Engineer	Deborah Snyder	11/15/2018 - 11/15/2021
Fire Protection Contracting	Vacant	11/15/2018 - 11/15/2021
General Contractor	Thomas Cattell	11/15/2018 - 11/15/2021

Attachments: Ordinance

One vacancy is currently open for applications.

Prepared by: **Charlene Pittman** **Grammarly Check** ☒

Sec. 6-22. - Construction Industry Licensing Board of Sumter County.

There is hereby established and continued the Construction Industry Licensing Board of Sumter County which shall hereinafter be referred to as the "licensing board."

(a) *Powers and duties.* The primary responsibilities of the licensing board shall be as follows:

(1) To evaluate and approve/disapprove contractors for local licensing via the issuance of competency cards, except when a contractor applies for a competency card through the reciprocity procedures set forth in section 6-29. When a contractor applies for a competency card through the reciprocity procedures of this code, the building official shall be responsible for the approval/disapproval of such applications.

(2) To act in the capacity of an impartial hearing board for complaints against licensed contractors and to discipline said licensed contractors when warranted.

(3) To act in the capacity of an impartial hearing board on reports of unlicensed contractor activity, and to refer said reports to the board when warranted.

(b) *Appointment, terms and attendance of members.*

(1) *Appointment.* The licensing board shall consist of five (5) members appointed by the board of county commissioners. Each member shall be a legal, bona fide resident of the county and meet all other appointee requirements established by the board. Membership shall be consistent with 61G4-20.001(1)(b) of the Florida Administrative Code. All contractors appointed shall hold an active competency card or a state certificate of competency.

(2) *Terms.* The term of office for each member of the licensing board shall be three (3) years. Each member of the licensing board shall serve until his or her successor is qualified and begins serving on the licensing board. Members of the licensing board shall be eligible for re-appointment.

(3) *Attendance.* Licensing board members serve at the pleasure of the board and may be suspended or removed for cause. If any member fails to attend two (2) of three (3) successive meetings without cause and approval of the chair, the licensing board may, by majority vote, declare that member's position vacant and notify the board, who shall promptly fill such vacancy. A member who ceases to be a resident of the county, or a contractor member who does not hold a current license, shall be automatically dismissed.

(4) *Officers.* The licensing board shall elect from among its members a chairman and vice-chairman annually. Officers shall serve for a term of one (1) year, with eligibility for subsequent re-election.

(5) *Meetings.* The licensing board shall meet at 6:00 p.m. on an as-needed basis at the designated location at which the board conducts its scheduled business. Applicants will be notified of the specific meeting date and location through the letter of notification sent to the applicant by the department. The department shall furnish a secretary who shall maintain written or electronically produced minutes of each meeting and provide clerical services for the licensing board. The county attorney or county attorney designee (also an attorney) shall be present at all meetings. Meetings may be rescheduled to a date certain if a quorum, is not available, or, in the alternative, if the building official finds the scheduled agenda items are not of an urgent nature, the issues for consideration shall be added to the next scheduled licensing board meeting agenda.

(6) *Quorum and voting.* A quorum for the licensing board shall consist of a simple majority of the duly appointed members. All members of the licensing board shall vote on each motion that comes before the board, unless a legally recognized conflict of interest exists, in which case a conflict of interest form shall be filed with the licensing board secretary, thus excusing said member from voting on any such matter.

(7) *Rules and regulations.* The licensing board may establish and adopt rules and regulations, in compliance with this article, for the conduct of its members and shall include such actions in the written minutes of the meeting.

(Ord. No. 2009-03, 3-10-09; Ord. No. 2015-11, § 3, 6-23-15; Ord. No. 2017-04, § 3A, 2-28-17; Ord. No. 2018-06, § 3, 2-27-18)

SUMTER COUNTY BOARD OF COUNTY COMMISSIONERS
EXECUTIVE SUMMARY

SUBJECT: Sumter County Public Library Advisory Board (SCPLAB) Vacancy (Board's Option).

REQUESTED ACTION: **Board's Option**

Meeting Type: Regular Meeting **DATE OF MEETING:** **5/12/2020**

CONTRACT: ☒ N/A Vendor/Entity:
Effective Date: Termination Date:
Managing Division / Dept: **Library Services**

BUDGET IMPACT:
FUNDING SOURCE:
Type: N/A **EXPENDITURE ACCOUNT:**

HISTORY/FACTS/ISSUES:

The SCPLAB purpose will be to formulate recommendations to the Library Single Administrative Head (LSAH), County Administrator (CA) and the Sumter County Board of County Commissioners (BOCC) for improving technology services. SCPLAB Membership shall be comprised of five at-large voting members with two-year terms commencing October 1, 2019 and one ex-officio member. The Bylaws specify that SCPLAB meetings will take place on the first Thursday of May and November.

Sector	Name	Term
At-Large Member	Vacant	10/1/2019 - 9/30/2021
At-Large Member	Lynn Harpool	10/1/2019 - 9/30/2021
At-Large Member	Roseann Samson	10/1/2019 - 9/30/2021
At-Large Member	Elizabeth Lillie	10/1/2019 - 9/30/2021
At-Large Member	Beverly Rovelli	10/1/2019 - 9/30/2021

Prepared by: **Charlene Pittman** **Grammarly Check** ☒

SUMTER COUNTY RESOLUTION 2013- 39

A RESOLUTION OF SUMTER COUNTY, FLORIDA, RE-ESTABLISHING A COUNTYWIDE LIBRARY SYSTEM ADVISORY BOARD, PROVIDING TERMS, AND PROVIDING AN EFFECTIVE DATE.

WHEREAS, it is the intent of Board of County Commissioners to provide open public library services for all the citizens of Sumter County consistent with the Interlocal Service Boundary Agreements with the Cities of Bushnell, Center Hill, Webster, and Wildwood and;

WHEREAS, Section 125.01 (f), Florida Statutes, gives the Board of County Commissioners of Sumter County the authority to provide libraries as a matter of great public interest, and;

WHEREAS, it is desirable to have a countywide library system advisory board in order to provide recommendations of improving technology services for the countywide library system to support the goal of maintaining modern/up-to-date services.

NOW, THEREFORE, BE IT RESOLVED by the Board of County Commissioners of Sumter County, Florida, as follows:

1. The currently appointed members of the formerly established Sumter County Public Library Advisory Board (SCPLAB) are hereby removed without prejudice.
2. There is hereby established the SCPLAB meeting the purpose of improving technology services for the countywide library system to support the goal of maintaining modern/up-to-date services
3. The membership shall be composed of five (5) at-large voting members and one (1) ex-officio member that is the Sumter County Library Single Administrative Head.
4. The at-large voting members shall be appointed by the Sumter County Board of Commissioners for a term of two years commencing October 1, 2013.

PASSED, ADOPTED AND APPROVED THIS 27th day of August 2013.

Effective Date. This resolution supersedes February 14, 2012 Resolution and shall take effect on August 27, 2013.

ATTEST:

BOARD OF COUNTY COMMISIONERS
OF SUMTER COUNTY, FLORIDA

BOARD OF COUNTY COMMISSIONERS SEAL SUMTER COUNTY BUSHNELL, FL

Connie Webb, D.C.
Clerk

By: Doug Gilpin, Chairman

SUMTER COUNTY BOARD OF COUNTY COMMISSIONERS
EXECUTIVE SUMMARY

SUBJECT: **Sumter County Tourist Development Council (TDC) Vacancy (Board's Option).**

REQUESTED ACTION: **Board's Option**

Meeting Type: Regular Meeting **DATE OF MEETING:** **5/12/2020**

CONTRACT: ☒ N/A Vendor/Entity:
Effective Date: Termination Date:
Managing Division / Dept: **Office of Management & Budget**

BUDGET IMPACT:
FUNDING SOURCE:
Type: N/A **EXPENDITURE ACCOUNT:**

HISTORY/FACTS/ISSUES:

Section 125.0104(4), Florida Statute, Sumter County established The Sumter County Tourist Development Council, indicating the intention of the county to consider the enactment of an ordinance levying and imposing the Tourist Development Tax.

The council shall be established by ordinance and composed of nine members who shall be appointed by the governing board. The chair of the governing board of the county or any other member of the governing board, as designated by the chair, shall serve on the council. Two members of the council shall be elected municipal officials, at least one of whom shall be from the most populous municipality in the county or sub-county special taxing district in which the tax is levied. Six members of the council shall be persons who are involved in the tourist industry and who have demonstrated an interest in tourist development, of which members, not less than three or more than four, shall be owners or operators of motels, hotels, recreational vehicle parks, or other tourist accommodations in the county and subject to the tax. All members of the council shall be electors of the county. The governing board of the county shall have the option of designating the chair of the council or allowing the council to elect a chair. The chair shall be appointed or elected annually and may be reelected or reappointed.

Sector	Position Status	Term
Chair	Doug Gilpin	
RV/Motel Owner/Operator	Raquel Nacaxe	11/01/2016 - 11/01/2020
RV/Motel Owner/Operator	Vacant	11/01/2016 - 11/01/2020
RV/Motel Owner/Operator	Bobby Hunt	11/01/2018 - 11/01/2022
Tourist Industry	Rebecca Morrison	11/01/2016 - 11/01/2020
Tourist Industry	Evelyn Stetler	11/01/2018 -11/01/2022
Tourist Industry	Ronald McMahon	11/01/2018 - 11/01/2022
Municipality	Don Levens	11/01/2018 - 11/01/2022
Sub-County Taxing Dist. Municipality(Large)	Joe Elliott	11/01/2016 – 11/01/2020

Prepared by: **Charlene Pittman** **Grammarly Check** ☒

Sec. 14-7. - Tourist development tax.

(a) *Definitions.* The definitions as set forth in F.S. § 125.0104(2)(b) are incorporated into this section by reference.

(b) The original county tourist development tax plan developed by the county tourist development council and submitted to the board of county commissioners on August 17, 2004, was hereby adopted. The exhibit A to the county tourist development tax plan under Ordinance 2013-08 shall be amended to read as stated in "Exhibit A" attached hereto and incorporated as if stated fully herein. This amendment shall take effect upon recording with the Secretary of State by the Sumter County Clerk, on a date no later than October 1, 2018.

(c) There is hereby levied and imposed within the entire area of the county, a tourist development tax in the amount of two (2) percent of each dollar and major fraction of each dollar of the total consideration charged for lease or rental of properties as set forth in F.S. § 125.0104(3).

(d) There is hereby created a permanent county tourist development council as set forth in F.S. § 125.0104(4)(e).

(e) All revenues derived from the tourist development tax, if approved, shall be utilized consistent with the provisions of F.S. § 125.0104 and the tourist development tax plan adopted herein.

(Ord. No. 2004-25, §§ 1—3, 5, 6, 8-31-04; Ord. No. 2010-22, § 1, 11-23-10; Ord. No. 2013-08, § 1, 07-09-13; Ord. No. 2018-17, § 3, 6-26-18)

Editor's note— Ord. No. 2004-25, adopted Aug. 31, 2004 and passed at an election held Nov. 2, 2004, did not specifically amend the Code. Hence, its inclusion herein as section 14-7 was at the discretion of the editor.

Editor's note— Exhibit A as referenced above has not been set out, but may be inspected at the county office.

SUMTER COUNTY BOARD OF COUNTY COMMISSIONERS
EXECUTIVE SUMMARY

SUBJECT: **Public Safety Coordinating Council Vacancies (Board's Option).**

REQUESTED ACTION: **Board's Option**

Meeting Type: Regular Meeting **DATE OF MEETING:** **5/12/2020**

CONTRACT: ☒ N/A Vendor/Entity:
Effective Date: Termination Date:
Managing Division / Dept: **Administrative Services**

BUDGET IMPACT:
FUNDING SOURCE:

Type: N/A **EXPENDITURE ACCOUNT:**

HISTORY/FACTS/ISSUES:

Chapter 951.26 Florida Statutes provides that each Board of County Commissioners (BOCC) shall establish a county Public Safety Coordinating Council. Chapter 394.657 allows each BOCC to designate the existing Public Safety Coordinating Council as the Planning Council.

The chairperson of the Board of County Commissioners, or another County Commissioner as designee, shall serve as the chairperson of the council until the council elects a chairperson from the membership of the council.

Sector	Member
State Attorney	Brad King
Public Defender	Mike Graves
Chief Circuit Judge	William Hallman III
Chief County Judge	Paul Militello
Chief Correctional Officer	Major Reece Thompson
Sheriff	William Farmer
Police Chief	Vacant
State Probation Administrator (4-year term)	Susan Cizmadia
Court Administration	Lorna Barker
BOCC Commissioner	Doug Gilpin
Director of County Probation (4-year term)	Bradley Arnold
Director of Local Substance Abuse Program (4-year term)	Jonathan Cherry
Director of Community Mental Health	Vacant
DCF Mental Health Representative	Vacant
Consumer of Mental Health Services	Vacant - Selected by Community Mental Health Director
Consumer of Community-Based Treatment Services	Vacant - Selected by Community Mental Health Director
Consumer of Substance Abuse Services	Vacant – Selected by Community Mental Health Director

Family Member of Consumer of Treatment Services	Vacant – Selected by Community Mental Health Director
Homeless Program/Housing Representative	Vacant
Director of Detention Facility of Juvenile Justice	Vacant
Chief Probation Officer of Juvenile Justice	Vacant
Jobs Program Representative (4-year term)	Vacant

The positions designated above as four-year terms will be a term from November 22, 2016 - November 22, 2020.

Prepared by: Charlene Pittman **Grammarly Check** ☒

SUMTER COUNTY RESOLUTION 2018- 25

A RESOLUTION OF THE BOARD OF COUNTY COMMISSIONERS OF SUMTER COUNTY, FLORIDA DESIGNATING THE SUMTER COUNTY PUBLIC SAFETY COORDINATING COUNCIL AS THE SUMTER COUNTY PLANNING COUNCIL

WHEREAS, The Sumter County Public Safety Coordinating Council established by Florida Statutes 951.26 is to meet at the call of the chairman of the committee for purpose of assessing the population status of all detention or correctional facilities owned by the county and formulating recommendations to ensure that the capabilities of such facilities are not exceeded, and

WHEREAS, Such recommendations shall include an assessment of the availability of pretrial intervention or probation programs, work-release programs, substance abuse programs, gain-time schedules, applicable bail bond schedules, and the confinement status of the inmates housed within each facility owned or contracted by the county, and

WHEREAS, Each Board of County Commissioners shall designate the county public safety coordinating council or designate another criminal or juvenile justice mental health and substance abuse council or committee, as the planning council or committee as established in Florida Statutes 394.657, and

WHEREAS, the Board of County Commissioners may assign any entity to prepare the application on behalf of the county administration for submission to the Criminal Justice, Mental Health, and Substance Abuse Statewide Grant Review Committee for review.

NOW, THEREFORE, BE IT RESOLVED by the Board of County Commissioners of Sumter County Florida, as follows:

Sumter County hereby designates the Sumter County Public Safety Coordinating Council as the Sumter County Planning Council for the purpose of:

1. Making a formal recommendation to the Board of County Commissioners regarding how the Criminal Justice, Mental Health, and Substance Abuse Reinvestment Grant Program may best be implemented within a community.
2. Assessing the population status of all detention or correctional facilities owned by the county and formulating recommendations to ensure that the capabilities of such facilities are not exceeded.
3. Recommendations shall include an assessment of the availability of pretrial intervention or probation programs, work-release programs, substance abuse programs, gain-time schedules, applicable bail bond schedules, and the confinement status of the inmates housed within each facility owned or contracted by the county.

DONE and RESOLVED at Bushnell, Sumter County, Florida this 10th day of April 2018.

Effective Date. This Resolution shall take effect on April 16, 2018.

BOARD OF COUNTY COMMISSIONERS
SUMTER COUNTY

Attest:

Caroline AlRestimawi
Deputy Clerk

Al Butler
Chairman

SUMTER COUNTY BOARD OF COUNTY COMMISSIONERS
EXECUTIVE SUMMARY

SUBJECT: Budget Amendment A-17 (FY 2019-2020) Adjust road project accounts to actual expenses in the Secondary Trust Fund (Staff Recommends Approval).

REQUESTED ACTION: Staff Recommends Approval

Meeting Type: Regular Meeting **DATE OF MEETING:** 5/12/2020

CONTRACT: ☒ N/A Vendor/Entity:
Effective Date: Termination Date:
Managing Division / Dept: **Office of Management & Budget**

BUDGET IMPACT: 0
FUNDING SOURCE: Secondary Trust Fund
Type: Annual **EXPENDITURE ACCOUNT:** Secondary Trust Fund

HISTORY/FACTS/ISSUES:

This budget amendment is needed to realign the account expenses for budgeted projects in the Secondary Trust Fund

Prepared by: **Debra Hunton** **Grammarly Check** ☒

BOARD OF SUMTER COUNTY COMMISSIONERS
BUDGET AMENDMENT

FISCAL YEAR: 2019-2020

AMENDMENT #: A-17
AGENDA DATE 5/12/2020

FUND NAME	ACCOUNT TYPE	ACCOUNT TITLE	ACCOUNT NUMBER	AMENDED BUDGET 5/6/2020	REVENUE INCREASE	REVENUE DECREASE	EXPENDITURE INCREASE	EXPENDITURE DECREASE	AMENDED BUDGET BALANCE (05/12/20)
Secondary Trust Fund	Expenditure	Reserve Road Projects	106-991-999-9331	$ 13,508,133				$ 61,113	$ 13,447,020
Secondary Trust Fund	Expenditure	SCOP C-478 Resurfacing/Shoulder US301	106-340-541-6345	$ 1,242			$ 44,792		$ 46,034
Secondary Trust Fund	Expenditure	C 466A EB rehab Canal Dr to Morse Blvd.	106-340-541-6362	$ 311,050			$ 16,321		$ 327,371
									$ -
									$ -
									$ -
									$ -
									$ -
									$ -
									$ -
				Totals	$ -	$ -	$ 61,113	$ 61,113	
				Total Budget Change	$ -				

EXPLANATION: This budget amendment is needed to realign the account expenses for budgeted projects in the Secondary Trust Fund.

SUMTER COUNTY BOARD OF COUNTY COMMISSIONERS
EXECUTIVE SUMMARY

SUBJECT: **Purchase Order Approval for FY 2019/2020 (Staff Recommends Approval).**

REQUESTED ACTION: **Staff Recommends Approval.**

Meeting Type: Regular Meeting **DATE OF MEETING:** **5/12/2020**

CONTRACT: ☒ N/A Vendor/Entity:
Effective Date: Termination Date:
Managing Division / Dept: **Purchasing**

BUDGET IMPACT:
. **FUNDING SOURCE:**

Type: N/A **EXPENDITURE ACCOUNT:**

HISTORY/FACTS/ISSUES:

The attached list of open purchase requisitions is recommended for approval. In accordance with the County's Purchasing Policies and Procedures, purchase requests $25,000 and over must be approved by the Sumter County Board of County Commissioners.

The attached Open Requisitions Report is recommended for approval.

Prepared by: **Becky Segrest** **Grammarly Check** ☒

SUMTER BOARD OF COMMISSIONERS

Open Requisitions Report

Only Possesion Groups :BOCC Minimum Amount: 9,999,999.00-

Approval Group	Requisition No	Requisition Interface	Approval Status	Fiscal Year	EMG	Initiator	Creation Date	Last Action By	Possession	Requisition Total
FSREV	00019715	PO	Waiting	2020	No	JBAILEY	04/23/20	BARNOLD	BOARD APPROV	123,600.00

Line	Qty	Unit Price	Ext Price	Vendor / G/L Account
1	1.00	20,600.00	20,600.00	G/L: 001-415-510-3100 V: 7408-THE VILLAGES TECH SOLUTIONS
	Description:	TSG monthly SLA fee Mar 15 - Apr 14 2020.		
2	1.00	20,600.00	20,600.00	G/L: 001-415-520-3100 V: 7408-THE VILLAGES TECH SOLUTIONS
	Description:	TSG monthly SLA fee Mar 15 - Apr 14 2020.		
3	1.00	20,600.00	20,600.00	G/L: 001-415-540-3100 V: 7408-THE VILLAGES TECH SOLUTIONS
	Description:	TSG monthly SLA fee Mar 15 - Apr 14 2020.		
4	1.00	20,600.00	20,600.00	G/L: 001-415-550-3100 V: 7408-THE VILLAGES TECH SOLUTIONS
	Description:	TSG monthly SLA fee Mar 15 - Apr 14 2020.		
5	1.00	20,600.00	20,600.00	G/L: 001-415-560-3100 V: 7408-THE VILLAGES TECH SOLUTIONS
	Description:	TSG monthly SLA fee Mar 15 - Apr 14 2020.		
6	1.00	20,600.00	20,600.00	G/L: 001-415-570-3100 V: 7408-THE VILLAGES TECH SOLUTIONS
	Description:	TSG monthly SLA fee Mar 15 - Apr 14 2020.		

ECON	00019775	PO	Waiting	2020	No	JBAILEY	05/05/20	BARNOLD	BOARD APPROV	320,000.00

Line	Qty	Unit Price	Ext Price	Vendor / G/L Account
1	1.00	320,000.00	320,000.00	G/L: 001-011-552-4919 V: 8936-GREAT SOUTHERN WOOD - BUSHNELL
	Description:	Great southern wood preserving, INC. incentive payment		

DIV	00019778	PO	Waiting	2020	No	JRICE	05/05/20	BARNOLD	BOARD APPROV	49,980.00

Line	Qty	Unit Price	Ext Price	Vendor / G/L Account
1	1.00	49,980.00	49,980.00	G/L: 106-340-541-6345 V: 380-CENTRAL TESTING LABORATORY, IN
	Description:	Engineering and materials testing for C-478 resurfacing from US 301 to SR 471. ITB #004-0-2020/RS		

FM	00019723	PO	Waiting	2020	No	JVALDEZ	04/24/20	BARNOLD	BOARD APPROV	51,500.00

Line	Qty	Unit Price	Ext Price	Vendor / G/L Account
1	1.00	51,500.00	51,500.00	G/L: 308-182-522-6252 V: 5061-CED/RAYBRO ELECTRIC SUPPLIES
	Description:	Owner Direct Purchase for the Sumter County Fire Station #33		

FM	00019722	PO	Waiting	2020	No	JVALDEZ	04/24/20	BARNOLD	BOARD APPROV	45,605.00

Line	Qty	Unit Price	Ext Price	Vendor / G/L Account
1	1.00	45,605.00	45,605.00	G/L: 308-182-522-6252 V: 6053-TOM BARROW COMPANY
	Description:	Owner Direct Purchase for the Sumter County Fire Station #33		

FM	00019731	PO	Waiting	2020	No	JVALDEZ	04/28/20	BARNOLD	BOARD APPROV	29,629.00

Line	Qty	Unit Price	Ext Price	Vendor / G/L Account
1	1.00	29,629.00	29,629.00	G/L: 308-100-523-6239 V: 351-CARRIER ENTERPRISE, LLC
	Description:	Owner Direct Purchase for the Sumter County Jail Expansion		

FM	00019730	PO	Waiting	2020	No	JVALDEZ	04/28/20	BARNOLD	BOARD APPROV	51,600.00

Line	Qty	Unit Price	Ext Price	Vendor / G/L Account
1	1.00	51,600.00	51,600.00	G/L: 308-100-523-6239 V: 2710-CITY ELECTRIC SUPPLY
	Description:	Owner Direct Purchase for the Sumter County Jail Expansion		

FM	00019759	PO	Waiting	2020	No	JVALDEZ	05/01/20	BARNOLD	BOARD APPROV	37,130.84

Line	Qty	Unit Price	Ext Price	Vendor / G/L Account
1	1.00	37,130.84	37,130.84	G/L: 308-182-522-6252 V: 8949-GULF COAST SUPPLY & MANUFACTUR
	Description:	Owner Direct Purchase for the Sumter County Fire Station #33		

FM	00019770	PO	Waiting	2020	No	JVALDEZ	05/05/20	BARNOLD	BOARD APPROV	46,072.63

Line	Qty	Unit Price	Ext Price	Vendor / G/L Account
1	1.00	46,072.63	46,072.63	G/L: 001-100-523-4600 V: 5655-MARK A WEBER PLUMBING INC
	Description:	Sumter County Boiler Replacement Project		

FSREV	00019774	PO	Waiting	2020	No	JVALDEZ	05/05/20	BARNOLD	BOARD APPROV	56,000.00

Only Possesion Groups :BOCC Minimum Amount: 9,999,999.00-

Approval Group	Requisition No	Requisition Interface	Approval Status	Fiscal Year	EMG	Initiator	Creation Date	Last Action By	Possession	Requisition Total

Line	Qty	Unit Price	Ext Price	Vendor / G/L Account
1	1.00	56,000.00	56,000.00	G/L: 001-412-535-8101 V: 402-CITY OF BUSHNELL

Description: County Portion of Wastewater Treatment Plant

** Totals ** Count: 10 811,117.47

Approved By: _____ Date: _____

SUMTER COUNTY BOARD OF COUNTY COMMISSIONERS
EXECUTIVE SUMMARY

SUBJECT: **Inventory Transactions – Disposal and Surplus of Property (Staff Recommends Approval).**

REQUESTED ACTION: **Staff Recommends Approval**

Meeting Type: Regular Meeting **DATE OF MEETING:** **5/12/2020**

CONTRACT: ☐ N/A Vendor/Entity:
Effective Date: Termination Date:
Managing Division / Dept: **Office of Management & Budget**

BUDGET IMPACT:
FUNDING SOURCE:
Type: N/A **EXPENDITURE ACCOUNT:**

HISTORY/FACTS/ISSUES:

Prepared by: **Suzanne Hammer** **Grammarly Check** ☒

Per the Sumter County Board of County Commissioners Tangible Personal Property Policy, Section IV Property Transfers and Surplus Property and Section IV Cannibalization and Disposal of Property.
The request for the Board is to approve the inventory transactions as noted below:

Description	Asset Tag #	Custodian	Action
Laserjet Color Printer	05274	Clerk of Court	Dispose
2011 Chevy Cargo Van	05097	Fleet	Surplus to Auction
2004 Chevy K2500	02953	Fleet	Surplus to Auction
Biomedical Refrigerator	05059	Health Department	Dispose

SUMTER COUNTY BOARD OF COUNTY COMMISSIONERS
EXECUTIVE SUMMARY

SUBJECT: Award and Enter into Contract with Mark A. Weber Plumbing, Inc. for ITB 016-0-2020/RS Sumter County Boiler Replacement Project (Staff Recommends Approval).

REQUESTED ACTION: **Staff Recommends Approval**

Meeting Type: Regular Meeting **DATE OF MEETING:** **5/12/2020**

CONTRACT: ☐ N/A Vendor/Entity: Mark A. Weber Plumbing, Inc.

Effective Date: 5/12/2020 Termination Date: 45 calendar days from the date established in the Notice to Proceed

Managing Division / Dept: **Engineering / Public Works**

BUDGET IMPACT: $46,072.63

FUNDING SOURCE: **General Fund**

Type: Annual **EXPENDITURE ACCOUNT:** **001-100-523-4600**

HISTORY/FACTS/ISSUES:

ITB 016-0-2020/RS Sumter County Boiler Replacement Project was broadcasted on 3/26/2020. Bids were due on 4/27/2020 at 2:30 p.m. and opened at 2:35 p.m. in the Training Room located at 319 E. Anderson Avenue, Bushnell, FL 33513.

Four (4) bids were received from the following contractors:

1.	Mark A. Weber Plumbing, Inc.	$46,072.63
2.	Balanced Mechanical & Plumbing Services, LLC.	$69,975.00
3.	Climate Control Mechanical Services	$92,799.00
4.	Southern Combustion Services, LLC	$95,000.00

The Southern Combustion Services, LLC bid was deemed non-responsive because they failed to include a mandatory document in their submittal package.

The Selection Committee met on 4/29/2020 at 12:00 p.m. in the Training Room located at 319 E. Anderson Avenue, Bushnell, FL 33513. The Selection Committee agreed to recommend to the Sumter County Board of County Commissioners to enter into contract with Mark A. Weber Plumbing, Inc. as the lowest responsive/responsible bid.

The following items are attached: Bid opening meeting minutes from 4/27/2020, Selection Committee meeting minutes from 4/29/2020, Mark A. Weber Plumbing, Inc. submittal and Agreement.

Prepared by: **Becky Segrest** **Grammarly Check** ☒

The Villages
DAILY SUN

Published Daily
Lady Lake, Florida
State of Florida
County Of Lake

Before the undersigned authority personally appeared
ALLAN LOVELL
who on oath says that he is Legal Ad Coordinator of the DAILY SUN, a daily newspaper published at Lady Lake in Lake County, Florida with circulation in Lake, Sumter and Marion Counties; that the attached copy of advertisement, being a **Legal Ad #3938072**
in the matter of **INVITATION TO BID**
was published in said newspaper in the issue(s) of
March 26th, 2020

Affiant further says that the said Daily Sun is a newspaper published at Lady Lake in said Lake County, Florida, and that the said newspaper has heretofore been continuously published in said Lake County, Florida each week and has been entered as second class mail matter at the post office in Lady Lake, in said Lake County, Florida, for a period of one year next preceding the first publication of the attached copy of advertisements; and affiant further says that he has neither paid nor promised any person, firm, or Corporation any discount, rebate, commission or refund for the purpose of securing this advertisement for publication in the said newspaper.

(Signature Of Affiant)

Sworn to and subscribed before me this 26 day March 2020.

Robin L. Baldeschwieler, Notary

Personally Known_____ or
Production Identification_____
Type of Identification Produced

ROBIN L. BALDESCHWIELER
MY COMMISSION # GG 026382
EXPIRES: October 10, 2020
Bonded Thru Notary Public Underwriters

Attach Notice Here

INVITATION TO BID (ITB)

Notice is hereby given that the Sumter County Board of County Commissioners (BOCC) will receive bids for the following: "ITB #016-0-2020/RS Sumter County Boiler Replacement Project"

Bid information is available upon request by calling (352) 689-4400, by coming to The Villages Sumter County Service Center, 1st Floor Reception Counter/Lobby, 7375 Powell Road, Wildwood, FL 34785, or by contacting Demand Star at 1-800-711-1712 or www.DemandStar.com.

All inquiries and questions regarding this invitation to bid must be made only to the contact identified below and shall be made in writing by fax, e-mail, or mail:

Mrs. Becky Segrest,
Assistant Purchasing Agent/Logistics Manager
Mailing Address: 7375 Powell Road, Wildwood, FL 34785
E-mail:
Becky.Segrest@sumtercountyfl.gov
Fax: (352) 689-4401

The deadline for submission of questions relating to this bid shall be April 9, 2020, by 5:00 p.m. A copy of the bid must be obtained in order to view the items being requested by the BOCC.

All bids are due by 2:30 p.m. on April 27, 2020, to the address listed above. Late submittals will be unopened. ITB submittals must be clearly marked: "ITB #016-0-2020/RS Sumter County Boiler Replacement Project."

Upon submission, all bids will become the property of the BOCC, who has the right to use any or all ideas presented in any packages submitted in response to this ITB, whether or not the bid is accepted. Bids will be opened at 2:35 p.m. on April 27, 2020, in Conference Room 110 of The Villages Sumter County Service Center, Wildwood, FL 34785.

The Selection Committee shall meet on April 29, 2020, at 12:00 p.m. in Conference Room 110 of The Villages Sumter County Service Center to review and discuss the bids.

The Selection Committee's recommendation will be presented to the BOCC meeting on May 12, 2020.

SUMTER COUNTY BOARD OF COUNTY COMMISSIONERS
SUMTER COUNTY, FLORIDA
#3938072 March 26, 2020

ITB 016-0-2020/RS Sumter County Boiler Replacement Project - Bid Opening Minutes

The meeting was held on 4/27/20 at 2:35 p.m. in the Training Room located at 319 E. Anderson Avenue, Bushnell, FL 33513.

Becky Segrest, Assistant Purchasing Agent/Logistics Manager, and Emilly Morrison, Purchasing Technician were present on behalf of the Purchasing Division.

Becky Segrest opened the meeting and read aloud the remaining ITB dates as follows:

- Selection Committee meeting will be held on 4/29/20 at 12:00 p.m. in the Training Room located at 319 E. Anderson Avenue, Bushnell, FL 33513.
- Recommendations to award and enter into contract will go to the Sumter County Board of County Commissioners on 5/12/20.

Becky stated that all items on the Bid Document Checklist will be verified. If any items are omitted or found to be non-compliant then the Purchasing Agent will be notified and will determine if the Bid is responsive or non-responsive.

Four (4) bid packages were received on time and opened.

The ITB requirements were verified as follows:

ITB Requirements	Climate Control Mechanical Services	Mark A. Weber Plumbing, Inc.	Balanced Mechanical & Plumbing Services, LLC	Southern Combustion Services, LLC
Mandatory: Must Accompany Submittal				
1 original bid	Included	Included	Included	Included
Bid Cover Page	Included	Included	Included	Included
Bidder Certification/Addenda Acknowledgement Form	Included	Included	Included	Included
Statement of General Terms and Conditions	Included	Included	Included	Missing
Statement of Contractor's Experience and Personnel	Included	Included	Included	Included
Drug Free Work Place Certificate	Included	Included	Included	Included
Statement of Public Entity of Crimes	Included	Included	Included	Included
Bid/Price Form	Included **$92,799.00**	Included **$46,072.63**	Included **$69,975.00**	Included **$95,000.00**
Exceptions/Deviations	Included	Included	Included	Included
Anti-Collusion Statement	Included	Included	Included	Included
Hold Harmless Agreement	Included	Including	Included	Included
Additional Required Documents				
3 Printed Copies	Included	Included	Included	Missing 2 Copies
E-Verification Certification Form	Included	Included	Included	Included
Electronic Signature Page of the E-Verify MOU	Missing	Missing	Included	Missing
Bid Document Checklist	Included	Included	Included	Missing
Certification of Insurability	Included	Included	Included	Missing

Mark A. Weber Plumbing, Inc. responded within 24 business hours with the required missing document. Southern Combustion Services, LLC's bid was considered non-responsive as they failed to include a mandatory document in their submittal package.

The meeting adjourned at 2:48 p.m.

① Climate Control Mechanical Services

PART 3

BID DOCUMENTS CHECKLIST OF ITEMS REQUIRED TO BE SUBMITTED

The following documents and forms in the following arrangement must accompany each bid or alternate bid submitted:

Documents that are mandatory and MUST accompany the submittal of the bid in order for the submission to be considered:

- ☑ One (1) original bid, clearly labeled "Original"
- ☑ Bid Cover Page. This is to be used as the first page of the ITB. This form must be fully completed and signed by an authorized officer of the vendor.
- ☑ Bidder Certification / Addenda Acknowledgement Form
- ☑ Statement of General Terms and Conditions
- ☑ A sworn, notarized Statement of Contractor's Experience and Personnel
- ☑ A sworn, notarized Drug Free Work Place Certificate must accompany each bid or alternate bid.
- ☑ A sworn, notarized Statement of Public Entity Crimes
- ☑ Bid / Price Form $92,799
- ☑ A separate sheet or sheets, clearly identified and numbered, of Exceptions or Deviations from the minimum specifications, must be attached to the Bid Form (if applicable).
- ☑ Anti-Collusion Statement
- ☑ Hold Harmless Agreement

Documents that are required as part of the submittal but will be considered minor discrepancies if turned in within 24 business hours (Monday – Friday 8:00 a.m. to 5:00 p.m.) after opening of the bid and are found to be in compliance with the purchasing standards of Sumter County:

- ☑ Three (3) printed copies of the bid in its entirety; and one (1) electronic single PDF version not password protected of the original submitted bid in its entirety.
- ☑ E-Verify Certification Form
- ☐ Electronic signature page of the E-Verify Memorandum of Understanding from the Department of Homeland Security. This must be dated prior to the ITB due date. MUST
- ☑ Bid Document Checklist of Items Required to be Submitted

- A Certificate of Insurability, acceptable to the County, shall accompany each bid or alternate bid, in the amounts as prescribed by State and Sumter County BOCC .

    - All insurance policies shall be written on companies authorized to do business in the State of Florida and satisfactory to the Sumter County BOCC. Prior to commencing services pursuant to the award of this bid, the Contractor shall furnish to the Sumter County BOCC certificates of insurance showing the required coverage has been procured and paid for in advance. Within thirty (30) days prior to expiration, the Vendor shall provide the Sumter County BOCC with proof that required coverage has been extended.

Date: _____

I, _____ (name), an authorized officer of _____ (company/vendor), confirm that the above listed documents are provided in our company's bid being submitted to Sumter County and confirm I have read and understand the ITB document in its entirety.

INTENTIONALLY LEFT BLANK

(2) Mark A. Weber Plumbing, Inc.

PART 3

BID DOCUMENTS CHECKLIST OF ITEMS REQUIRED TO BE SUBMITTED

The following documents and forms in the following arrangement must accompany each bid or alternate bid submitted:

Documents that are mandatory and MUST accompany the submittal of the bid in order for the submission to be considered:

- ☑ One (1) original bid, clearly labeled "Original"
- ☑ Bid Cover Page. This is to be used as the first page of the ITB. This form must be fully completed and signed by an authorized officer of the vendor.
- ☑ Bidder Certification / Addenda Acknowledgement Form
- ☑ Statement of General Terms and Conditions
- ☑ A sworn, notarized Statement of Contractor's Experience and Personnel
- ☑ A sworn, notarized Drug Free Work Place Certificate must accompany each bid or alternate bid.
- ☑ A sworn, notarized Statement of Public Entity Crimes
- ☑ Bid / Price Form $46,072.43
- ☐ A separate sheet or sheets, clearly identified and numbered, of Exceptions or Deviations from the minimum specifications, must be attached to the Bid Form (if applicable).
- ☑ Anti-Collusion Statement
- ☑ Hold Harmless Agreement

Documents that are required as part of the submittal but will be considered minor discrepancies if turned in within 24 business hours (Monday – Friday 8:00 a.m. to 5:00 p.m.) after opening of the bid and are found to be in compliance with the purchasing standards of Sumter County:

- ☑ Three (3) printed copies of the bid in its entirety; and one (1) electronic single PDF version not password protected of the original submitted bid in its entirety.
- ☑ E-Verify Certification Form
- ☐ Electronic signature page of the E-Verify Memorandum of Understanding from the Department of Homeland Security. This must be dated prior to the ITB due date. Missing
- ☑ Bid Document Checklist of Items Required to be Submitted

- A Certificate of Insurability, acceptable to the County, shall accompany each bid or alternate bid, in the amounts as prescribed by State and Sumter County BOCC .

    - All insurance policies shall be written on companies authorized to do business in the State of Florida and satisfactory to the Sumter County BOCC. Prior to commencing services pursuant to the award of this bid, the Contractor shall furnish to the Sumter County BOCC certificates of insurance showing the required coverage has been procured and paid for in advance. Within thirty (30) days prior to expiration, the Vendor shall provide the Sumter County BOCC with proof that required coverage has been extended.

Date: _____

I, _____ (name), an authorized officer of _____ (company/vendor), confirm that the above listed documents are provided in our company's bid being submitted to Sumter County and confirm I have read and understand the ITB document in its entirety.

INTENTIONALLY LEFT BLANK

(B) Balanced Mechanical & Plumbing Services, LLC

PART 3

BID DOCUMENTS CHECKLIST OF ITEMS REQUIRED TO BE SUBMITTED

The following documents and forms in the following arrangement must accompany each bid or alternate bid submitted:

Documents that are mandatory and MUST accompany the submittal of the bid in order for the submission to be considered:

- ☑ One (1) original bid, clearly labeled "Original"
- ☑ Bid Cover Page. This is to be used as the first page of the ITB. This form must be fully completed and signed by an authorized officer of the vendor.
- ☑ Bidder Certification / Addenda Acknowledgement Form
- ☑ Statement of General Terms and Conditions
- ☑ A sworn, notarized Statement of Contractor's Experience and Personnel
- ☑ A sworn, notarized Drug Free Work Place Certificate must accompany each bid or alternate bid.
- ☑ A sworn, notarized Statement of Public Entity Crimes
- ☑ Bid / Price Form $69,975
- ☐ A separate sheet or sheets, clearly identified and numbered, of Exceptions or Deviations from the minimum specifications, must be attached to the Bid Form (if applicable).
- ☑ Anti-Collusion Statement
- ☑ Hold Harmless Agreement

Documents that are required as part of the submittal but will be considered minor discrepancies if turned in within 24 business hours (Monday – Friday 8:00 a.m. to 5:00 p.m.) after opening of the bid and are found to be in compliance with the purchasing standards of Sumter County:

- ☑ Three (3) printed copies of the bid in its entirety; and one (1) electronic single PDF version not password protected of the original submitted bid in its entirety.
- ☑ E-Verify Certification Form
- ☑ Electronic signature page of the E-Verify Memorandum of Understanding from the Department of Homeland Security. This must be dated prior to the ITB due date.
- ☑ Bid Document Checklist of Items Required to be Submitted

- A Certificate of Insurability, acceptable to the County, shall accompany each bid or alternate bid, in the amounts as prescribed by State and Sumter County BOCC .

    - All insurance policies shall be written on companies authorized to do business in the State of Florida and satisfactory to the Sumter County BOCC. Prior to commencing services pursuant to the award of this bid, the Contractor shall furnish to the Sumter County BOCC certificates of insurance showing the required coverage has been procured and paid for in advance. Within thirty (30) days prior to expiration, the Vendor shall provide the Sumter County BOCC with proof that required coverage has been extended.

Date: _____

I, _____ (name), an authorized officer of _____ (company/vendor), confirm that the above listed documents are provided in our company's bid being submitted to Sumter County and confirm I have read and understand the ITB document in its entirety.

INTENTIONALLY LEFT BLANK

(F) S. Combustion

PART 3

BID DOCUMENTS CHECKLIST OF ITEMS REQUIRED TO BE SUBMITTED

The following documents and forms in the following arrangement must accompany each bid or alternate bid submitted:

Documents that are mandatory and MUST accompany the submittal of the bid in order for the submission to be considered:

- ☑ One (1) original bid, clearly labeled "Original"
- ☑ Bid Cover Page. This is to be used as the first page of the ITB. This form must be fully completed and signed by an authorized officer of the vendor.
- ☑ Bidder Certification / Addenda Acknowledgement Form
- ☐ Statement of General Terms and Conditions missing
- ☑ A sworn, notarized Statement of Contractor's Experience and Personnel
- ☑ A sworn, notarized Drug Free Work Place Certificate must accompany each bid or alternate bid.
- ☑ A sworn, notarized Statement of Public Entity Crimes
- ☐ Bid / Price Form $95,000.00
- ☐ A separate sheet or sheets, clearly identified and numbered, of Exceptions or Deviations from the minimum specifications, must be attached to the Bid Form (if applicable).
- ☑ Anti-Collusion Statement
- ☑ Hold Harmless Agreement

Documents that are required as part of the submittal but will be considered minor discrepancies if turned in within 24 business hours (Monday – Friday 8:00 a.m. to 5:00 p.m.) after opening of the bid and are found to be in compliance with the purchasing standards of Sumter County:

- ☐ Three (3) printed copies of the bid in its entirety; and one (1) electronic single PDF version not password protected of the original submitted bid in its entirety. 2 copies
- ☑ E-Verify Certification Form
- ☐ Electronic signature page of the E-Verify Memorandum of Understanding from the Department of Homeland Security. This must be dated prior to the ITB due date. missing
- ☐ Bid Document Checklist of Items Required to be Submitted missing

(4)

- A Certificate of Insurability, acceptable to the County, shall accompany each bid or alternate bid, in the amounts as prescribed by State and Sumter County BOCC .
  - All insurance policies shall be written on companies authorized to do business in the State of Florida and satisfactory to the Sumter County BOCC. Prior to commencing services pursuant to the award of this bid, the Contractor shall furnish to the Sumter County BOCC certificates of insurance showing the required coverage has been procured and paid for in advance. Within thirty (30) days prior to expiration, the Vendor shall provide the Sumter County BOCC with proof that required coverage has been extended.

Date: _____

I, _____ (name), an authorized officer of _____ (company/vendor), confirm that the above listed documents are provided in our company's bid being submitted to Sumter County and confirm I have read and understand the ITB document in its entirety.

INTENTIONALLY LEFT BLANK

SIGN – IN SHEET

DATE: 4-27-20

TIME: 2:35, public Works Training Room

BID/RFP/RFQ NAME: 016-0-2020 Sumter County Boiler Replacement Project

- ○ Pre-Bid/Proposal/Qualifications Meeting
- ☒ Bid/RFP/RFQ Opening
- ○ Selection Committee Meeting
- ○ Vendor Presentations / Selection Committee Meeting

Please list all the companies you are representing beside your name.

NAME	COMPANY
Emilie Merrison	BOCC - Purchasing
Robert Boling	GCMS
Becky Segrest	BOCC Purchasing

Selection Committee Meeting Minutes for ITB 016-0-2020/RS Sumter County Boiler Replacement Project.

The meeting was held on April 29, 2020 at 12:00 p.m. in the Public Works Training Room located at 319 E. Anderson Avenue, Bushnell, FL 33513.

Mike Bryant, Assistant Public Works Director, Mike Jara, Assistant Public Works Director and Bruce Atkinson, Facilities and Parks Supervisor were present on behalf of the Selection Committee.

Becky Segrest, Assistant Purchasing Agent/Logistics Manager and Emilly Morrison, Purchasing Technician, were present on behalf of the Purchasing Division.

Becky announced that the recommendation of the Selection Committee will go to the Sumter County Board of County Commissioners (BOCC) for award and to enter into a contract on May 12, 2020.

The Selection Committee agreed to recommend to the Sumter County Board of County Commissioners to award and enter into contract with Mark A. Weber Plumbing, Inc. as the lowest responsive/responsible bidder.

The meeting adjourned at 12:12 p.m.

SIGN – IN SHEET

DATE: 4-29-20

TIME: ITB 016-0-2020/RS Sumter County Boiler Replacement Project

BID/RFP/RFQ NAME: 12:00 pm Training Room

- ○ Pre-Bid/Proposal/Qualifications Meeting
- ○ Bid/RFP/RFQ Opening
- ☒ Selection Committee Meeting
- ○ Vendor Presentations / Selection Committee Meeting

Please list all the companies you are representing beside your name.

NAME	COMPANY
Becky Segrest	BOCC-Purchasing
Emily Morrison	BOCC-Purchasing
Michael Bryant	BOCC-Operations
[illegible]	BOCC-Facilities
Bonnie Atkinson	BOCC-Facilities/Parks.

INVITATION TO BID COVER PAGE

Name of Firm, Entity or Organization: Mark A. Weber Plumbing, Inc.

Federal Employer Identification Number (FEIN): 59-3152784

State of Florida License Number (If Applicable): RF 0066464

Name of Contact Person: Mark A. Weber

Title: President

E-Mail Address: mwplumbing@gmail.com

Mailing Address:

Street Address (if different): P.O. Box 1381

City, State, Zip: Lake Panasoffkee, FL 33538

Telephone: 352-303-8490 **Fax:** N/A

Organizational Structure – Please Check One:

Corporation ☑ **Partnership** ☐ **Proprietorship** ☐ **Joint Venture** ☐ **Other** ☐

If Corporation:
Date of Incorporation: 11/12/1992 **State of Incorporation:** Florida

States Registered in as Foreign Corporation: N/A

Authorized Signature:

Print Name: Mark A. Weber

Signature: Mark A Weber

Title: President

Phone: 352-303-8490

This document must be completed and returned with your Submittal.

BIDDER'S CERTIFICATION

Submit To: Sumter County Board of County Commissioners 7375 Powell Road Wildwood, FL 34785 Phone 352-689-4400 Fax 352-689-4401	SUMTER COUNTY BOARD OF COUNTY COMMISSIONERS INVITATION TO BID (ITB) CERTIFICATION AND ADDENDA ACKNOWLEDGMENT

DUE DATE: April 27, 2020	DUE TIME: 2:30 P.M.	ITB # 016-0-2020/RS

TITLE: Sumter County Boiler Replacement Project

VENDOR NAME:	PHONE NUMBER:
Mark A. Weber Plumbing, Inc.	352-303-8490
VENDOR MAILING ADDRESS:	**FAX NUMBER:**
P.O. Box 1381	N/A
CITY/STATE/ZIP:	**E-MAIL ADDRESS:**
Lake Panasoffkee, FL 33538	mwplumbing@gmail.com

"I, the undersigned, certify that I have reviewed the addenda listed below (list all addenda received to date). I understand that timely commencement will be considered in award of this ITB and that cancellation of award will be considered if commencement time is not met, and that untimely commencement may be cause for termination of contract. I further certify that the services will meet or exceed the ITB requirements. I, the undersigned, declare that I have carefully examined the ITB, specifications, terms and conditions as applicable for this Request, and that I am thoroughly familiar with all provisions and the quality and type of coverage and services specified. I further declare that I have not divulged, discussed, or compared this ITB with any other Offeror and have not colluded with any Offerors or parties to an ITB whatsoever for any fraudulent purpose."

1				
Addendum #	Addendum #	Addendum #	Addendum #	Addendum #

"I certify that this quote is made without prior understanding, agreement, or connection with any corporation, firm, or person submitting an ITB for the same material, supplies, equipment or services and is in all respects fair and without collusion or fraud. I agree to abide by all conditions of this ITB and certify that I am authorized to sign this response and that the offer is in compliance with all requirements of the ITB, including but not limited to certification requirements. In conducting offers with an agency for Sumter County Board of County Commissioners (BOCC), respondent agrees that if this Proposals is accepted, the respondent will convey, sell, assign, or transfer to the Sumter County BOCC all rights, title and interest in and to all causes of action it may now or hereafter acquire under the anti-trust laws of the United States for price fixing relating to the particular commodities or services purchased or acquired by the COUNTY. At the Sumter County BOCC discretion, such assignment shall be made and become effective at the time the purchasing agency renders final payment to the respondent."

Mark A. Weber / President President	Mark A Weber	4/23/2020
Authorized Agent Name, Title (Print)	Authorized Signature	Date

This document must be completed and returned with your Submittal

STATEMENT OF TERMS AND CONDITIONS

PUBLIC ENTITY CRIME: A person or affiliate who has been placed on the convicted Vendor list following a conviction for a public entity crime may not submit a Proposals/Bid on a contract to provide any goods or services to a public entity, for the construction or repair of a public building or public work, may not submit Proposals/Bids on leases of real property to a public entity, may not be awarded or perform work as a contractor, supplier, subcontractor, or consultant under a contract with any public entity, and may not transact business with any public entity in excess of the threshold amount provided in Section 287.017, for CATEGORY TWO for a period of 36 months from the date of being placed on the convicted Vendor list.

INDEMNIFICATION: Indemn
ification, Insurance and Sovereign Immunity. Vendor shall be solely and entirely responsible for its tortious acts and for the tortious acts of its agents, employees, or servants during the performance of this Agreement. Vendor shall indemnify and save harmless the County, its agents, employees and officers from and against all liabilities, claims, demands, or actions at law and equity including court costs and attorney's fees that may hereafter at any time be made or brought by anyone for the purposes of enforcing a claim on account of any injury or damage allegedly caused or occurring to any person or property in which was caused in whole or in part by any tortious, wrongful, or intentional acts or omissions of Vendor, its agents, or employees during performance under this Agreement. Vendor shall provide County with a certificate of coverage identifying County as both a Named Insured and a Certificate Holder. The foregoing is not intended, and shall not be construed, as a waiver by County of the benefits of Section 768.28, Florida Statutes.

PROHIBITION OF LOBBYING: During the black-out period which is, the period between the time the submittals for Invitation to Bid or the Request for Proposals, or Qualifications, or information, as applicable, are received at Contracts / Purchasing and the time the Board awards the contract, no proposer, no lobbyist, principal, or other person may lobby, on behalf of a competing party in a particular procurement matter, any member of the Board, or any Board employee other than the Purchasing Division Manager. Violation of this provision may result in disqualification of violating party. All questions regarding this Request for Proposals (RFP) or Invitation to Bid (BID) must be submitted in writing to the Board's Purchasing Division Manager.

ANTI TRUST LAWS: By submission of a signed RFP or BID, the successful Vendor acknowledges compliance with all antitrust laws of the United States and the State of Florida, in order to protect the public from restraint of trade, which illegally increases prices.

CONFLICT OF INTEREST: The award of the contract hereunder is subject to the provisions of Chapter 112 of the Florida Statutes. Vendors shall disclose the name of any Officer, Director, Partner, Associate, or Agent who is also an Officer, Appointee, or Employee of any of the Boards at the time of the RFP or BID, or at the time of occurrence of the Conflict of Interest thereafter.

INTERPRETATION, CLARIFICATIONS AND ADDENDA: No oral interpretations will be made to any Vendor as to the meaning of the RFP/BID Contract Documents. Any inquiry or request for interpretation received by the Purchasing Division Manager before the date listed herein will be given consideration. All such changes or interpretations will be made in writing in the form of an addendum and, if issued, will be distributed at or after the Pre-Proposals/Pre-Bid Conference, mailed or sent by available or electronic means to all attending prospective Submitters prior to the established RFP/BID opening date. Each Vendor shall acknowledge receipt of such addenda in the space provided. In case any Proposer/Bidder fails to acknowledge receipt of such addenda or addendum, his offer will nevertheless be construed as though it had been received and acknowledged and the submission of his bid will constitute acknowledgment of the receipt of same. All addenda are a part of the RFP/BID FORMS and each Proposer/Bidder will be bound by such addenda, whether or not received by him. It is the responsibility of each proposer/bidder to verify that he has received all addenda issued before RFP's/BID's are opened. In the case of unit price items, the quantities of work to be done and materials to be furnished under this RFP/BID Contract are to be considered as approximate only and are to be used solely for the comparison of RFP's/BID's received. The Board and/or his CONSULTANT do not expressly or by implication represent that the actual quantities involved will correspond exactly therewith; nor shall the Vendor plead misunderstanding or deception because of such estimate or quantities of work performed or material furnished in accordance with the Specifications and/or Drawings and other Proposals/Bid Documents, and it is understood that the quantities may be increased or diminished as provided herein without in any way invalidating any of the unit or lump sum prices bid.

GOVERNING LAWS AND REGULATIONS: The Vendor is required to be familiar with and shall be responsible for complying with all federal, state and local laws, ordinances, rules and regulations that in any manner affect the work.

PROPRIETARY/CONFIDENTIAL INFORMATION: Vendors are hereby notified that all information submitted as part of, or in support of RFP's/BID's, will be available for public inspection ten days after opening of the RFP's/BID's or until a short list is recommended whichever comes first, in compliance with Chapter 119, and 287 of the Florida Statutes. Any person wishing to view the RFP's/BID's must make an appointment by calling the Purchasing Division Manager at (352) 689-4400. All RFP's/BID's submitted in response to this solicitation become the property of the Board. Unless information submitted is proprietary, copy written, trademarked, or patented, the Board reserves the right to utilize any or all information, ideas, conceptions, or portions of any RFP/BID, in its best interest.

TAXES: The Board of Sumter County Commissioners is exempt from any taxes imposed by the State and/or Federal Government. Exemption certificates will be provided upon request.

NON-COLLUSION DECLARATION: By signing this RFP/BID, all Vendors shall affirm that they shall not collude, conspire, connive or agree, directly or indirectly, with any other Proposer, firm, or person to submit a collusive or sham Proposals in connection with the work for which their RFP/BID has been submitted; or to refrain from Bidding in connection with such work; or have in any manner, directly or indirectly, sought by person to fix the price or prices in the RFP/BID or of any other Bidder, or to fix any overhead, profit, or cost elements of the RFP/BID price or the RFP/BID price of any other Bidder, or to secure through any collusion, conspiracy, connivance, or unlawful agreement any advantage against any other Bidder, or any person interested in the proposed work.

By signing this form, the Contractor/Vendor agrees that this quote is made without any other understanding, agreement, or connection with any person, corporation, or firm submitting a quote for the same purpose and that the quote is in all respects fair and without collusion or fraud, IT IS AGREED BY THE UNDERSIGNED CONTRACTOR/VENDOR, THAT THE SIGNING AND DELIVERY OF THE QUOTE REPRESENTS THE CONTRACTOR'S/VENDOR'S ACCEPTANCE OF THE TERMS AND CONDITIONS OF THE FORGOING SPECIFICATIONS AND PROVISIONS, AND IF AWARDED, THIS CONTRACT WILL REPRESENT THE AGREEMENT BETWEEN THE CONTRACTOR/VENDOR AND THE BOARD OF SUMTER COUNTY COMMISSIONERS.

PROPOSER RESPONSIBILITY: Invitation by the Board to Vendors is based on the recipient's specific request and application to DemandStar by Onvia at www.DemandStar.com [(800) 711-1712] or as the result of response by the public to the legal advertisements required by State law. Firms or individuals submit their responses on a voluntary basis, and therefore are not entitled to compensation of any kind.

OWNERSHIP OF SUBMITTALS: All responses, inquiries or correspondence relating to or in reference to this RFP/BID, and all other reports, charts, displays, schedules, exhibits and other documentation submitted by the Vendors will become the property of the Board. Reference to literature submitted with a previous RFP/BID will not relieve the Bidder from including any required documents with this RFP/BID.

EXAMINATION OF BID DOCUMENTS: Each Bidder shall carefully examine the RFP/BID Document to ensure all pages have been received, all drawings and/or Specifications and other applicable documents are included, and shall inform himself thoroughly regarding any and all conditions and requirements that may in any manner affect cost, progress or performance of the work to be performed under the Contract. Ignorance on the part of the CONTRACTOR will in no way relieve him of the obligations and responsibilities assumed under the Contract.

VENDOR RESPONSIBILITY: Vendors are fully and completely responsible for the labeling, identification and delivery of their submittals. The Purchasing Division Manager will not be responsible for any mislabeled or misdirected submissions, nor those handled by delivery persons, couriers, or the US Postal Service.

DRUG FREE WORKPLACE: **All Proposers/Bidders shall submit the enclosed, duly signed and notarized form entitled "Drug Free Workplace Certificate". The Drug Free Workplace Vendor shall have the burden of demonstrating that his program complies with Section 287.087 of the Florida Statutes, and any other applicable state law.**

BOARD OF SUMTER COUNTY COMMISSIONERS, are political subdivisions of the State of Florida, and reserve the right to reject any and/or all submittals, reserve the right to waive any informalities or irregularities in the examination process, and reserve the right to award contracts and/or in the best interest of the Boards. Submittals not meeting stated minimum terms and qualifications may be rejected by the Boards as non-responsive. The Boards reserve the right to reject any or all submittals without cause. The Boards reserves the right to reject the submission of any Vendor in arrears or in default upon any debt or contract to the Boards, or who has failed to perform faithfully any previous contract with the Boards or with other governmental agencies.

PUBLIC RECORDS LAW: Correspondence, materials and documents received pursuant to this RFP/BID become public records subject to the provisions of Chapter 119, Florida Statutes.

VERIFICATION OF TIME: Nextel time is hereby established as the Official Time of the Boards for Public Works ITBs and the electronic submission stamp of all other responses will establish the Official Time of the Boards.

PREPARATION OF PROPOSALS/BIDS:

Signature of the Bidder: The Bidder must sign the RFP/BID FORMS in the space provided for the signature. If the Proposer/Bidder is an individual, the words "doing business as _____." must appear beneath such signature. In the case of a partnership, the signature of at least one of the partners must follow the partnership name and the words, "Member of the Firm" should be written beneath such signature. If the Proposer/Bidder is a corporation, the title of the officer signing the RFP/BID on behalf of the corporation must be stated and evidence of his authority to sign the RFP/BID must be submitted. The Proposer/Bidder shall state in the RFP/BID FORMS the name and address of each person interested therein.

Basis for Bidding: The price proposed for each item shall be on a lump sum or unit price basis according to specifications on the RFP/BID FORM. The proposed prices shall remain unchanged for the duration of the Contract and no claims for cost escalation during the progress of the work will be considered, unless otherwise provided herein.

Total Proposed Price/Total Contract Sum Proposed: If applicable, the total price bid for the work shall be the aggregate of the lump sum prices proposed and/or unit prices multiplied by the appropriate estimated quantities for the individual items and shall be stated in figures in the appropriate place on the RFP/BID FORM. In the event that there is a discrepancy on the RFP/BID FORM due to unit price extensions or additions, the corrected extensions and additions shall be used to determine the project bid amount.

TABULATION: Those wishing to receive an official tabulation of the results of the opening of this RFP/BID are to submit to BOCC a self-addressed, stamped business size (No. 10) envelope, prominently marked on the front lower left side, with the RFP identification. Tabulation requested by telephone, fax or electronic media will not be accepted.

OBLIGATION OF WINNING BIDDER: The contents of the RFP/BID of the successful proposer/bidder will become contractual obligations if acquisition action ensues. Failure of the successful Proposer/Bidder to accept these obligations in a contract may result in cancellation of the award and such Vendor may be removed from future participation.

AWARD OF BID: It is the Boards' intent to select a Vendor within **sixty (60) calendar days** of the deadline for receipt of Proposals/Bids. However, Proposals/Bids must be firm and valid for award for at least **ninety (90) calendar days** after the deadline for receipt of the RFP/BID.

ADDITIONAL REQUIREMENTS: The firms shall furnish such additional information as the Boards may reasonably require. This includes information which indicates financial resources as well as ability to provide the services. The Boards reserve the right to make investigations of the qualifications of the firm as it deems appropriate.

PREPARATION COSTS: The Board shall not be obligated or be liable for any costs incurred by Proposers/Bidders prior to issuance of a contract. All costs to prepare and submit a response to this RFP/BID shall be borne by the Proposer/Bidder.

TIMELINESS: All work will commence upon authorization from the Boards' representative (Purchasing Division Manager). All work will proceed in a timely manner without delays. The Vendor shall commence the work UPON RECEIPT OF NOTICE TO PROCEED and/or ORDER PLACED (PURCHASE ORDER PRESENTED), and shall deliver in accordance to the terms and conditions outlined and agreed upon herein.

DELIVERY: All prices shall be FOB Destination, Sumter County, Florida, inside delivery unless otherwise specified.

PLANS, FORMS & SPECIFICATIONS: Bid Packages are available from the Purchasing Division Manager. These packages are available for pickup or by mail. If requested to mail, the Proposer/Bidder must supply a courier account number (UPS, FedEx, etc). Proposers/Bidders are required to use the official RFP/BID FORMS, and all attachments itemized herein, are to be submitted as a single document. Any variation from the minimum specifications must be clearly stated on the RFP/BID FORM and/or Exceptions/Deviations Sheet(s). Only one set of plans, forms, and specifications will be furnished each company or corporation interested in submitting a Proposals/bid. RFP/BID FORM documents for this project are free of charge and are available on-line and are downloadable (Vendor must pay any DemandStar fees or any shipping).

MANUFACTURER'S NAME AND APPROVED EQUIVALENTS: Any manufacturer's names, trade names, brand names, information and/or catalog numbers listed in a specification are for information and not intended to limit competition unless otherwise indicated. The Proposer/Bidder may offer any brand for which he is an authorized representative, which meets or exceeds the RFP/BID specification for any item(s). If RFP's/BID's are based on equivalent products, indicate on the RFP/BID FORM the manufacturer's product name and literature, and/or complete specifications. Reference to literature submitted with a previous RFP/BID will not satisfy this provision. The Proposer/Bidder shall explain in detail the reason(s) why the proposed equivalent will meet the specifications and not be considered an exception thereto. RFP's/BID's which do not comply with these requirements are subject to rejection. RFP's/BID's lacking any written indication of intent to quote an alternate brand will be received and considered in complete compliance with the specifications as listed on the RFP/BID FORM. The Purchasing Division Manager is to be notified, in writing, of any proposed changes in materials used, manufacturing process, or construction. However, changes shall not be binding upon the Boards unless evidenced by a Change Notice issued and signed by the Purchasing Division Manager, or designated representative.

QUANTITIES: The quantities as specified in this RFP/BID are estimates only and are not to be construed as guaranteed minimums.

SAMPLES: Samples of items, when called for, shall be furnished free of expense, and if not destroyed may, upon request, be returned at the Proposer's/Bidder's expense. Each sample shall be labeled with the Proposer's/Bidder's name, manufacturer brand name and number, RFP/BID number and item reference. Samples of successful Proposer's/Bidder's items may remain on file for the term of the contract. Request for return of samples shall be accompanied by instructions which include shipping authorization and must be received at time of opening. Samples not returned may be disposed of by the Boards within a reasonable time as deemed appropriate.

DOCUMENT RE-CREATION: Vendor may choose to re-create any document(s) required for this solicitation, but must do so at his own risk. All required information in the original Board format must be included in any re-created document. Submittals may be deemed non-responsive if required information is not included in any re-created document.

ACKNOWLEDGED: 4/23/2020

(Signature and Date)

This document must be completed and returned with your Submittal.

STATEMENT OF VENDOR'S EXPERIENCE AND PERSONNEL

(Vendor may also provide any supplemental company or personnel information that will assist the Selection Committee in evaluating your bid).

VENDOR: Mark A. Weber Plumbing, Inc.

DATE: April 15, 2020

1. How many years has your organization been in business as a general contractor under your present business name?
   27

2. List all previous business names of your organization:

   N/A

3. How many years of experience in general contracting? 27

   Prime Contractor _____ Subcontractor 27

4. List all officers and directors of your organization:

NAME	POSITION/TITLE
Mark A. Weber	President

5. Have you ever failed to complete any work awarded to you in the last 3 years?
   Yes _____ No X____. If yes, where and why?

EXPERIENCE

1. Describe any experience of the principal individuals (Foremen, Superintendents, etc.) who are responsible for the actual general contracting work of your organization?

Name		Position
Mark A. Weber		President
Type of Work	Yrs. Experience	Yrs. With
Plumbing Service	38	27

Firm

N/A
Name Position

Type of Work Yrs. Experience Yrs. With
Firm

N/A
Name Position

Type of Work Yrs. Experience Yrs. With
Firm

N/A
Name Position

Type of Work Yrs. Experience Yrs. With
Firm

Name Position

Type of Work Yrs. Experience Yrs. With
Firm

2. List/describe five (5) contracts that you currently have.

Statewide Construction, Inc. / Wade Custom Home — Wildwood
Project — Location

$3,630.00 — $11,000.00
Date Amount — Contract

Tom Williford 352-476-1937
Project Architect Contact Name and Phone Number

Debra Wade 352-748-3747
Owner's Contact Name and Phone Number

G&S Custom Homes, Inc. / Ross Custom Home — Lake Panasoffkee
Project — Location

$5,600.00 — $9,300.00
Date — Contract

Amount

Rusty Robinson 863-815-9541

Project Architect Contact Name and Phone Number

Mike & Athena Ross 352-476-3757

Contact Name and Phone Number

First Baptist Church / Mixed Use Commercial — Bushnell

Project — Location

$10,500.00 — $30,000.00

Date — Contract

Amount

Project Architect Contact Name and Phone Number

Wayne Young 352-303-4853

Contact Name and Phone Number

H&H Inspections, LLC / Hyatt Custom Home — Webster

Project — Location

$3,100.00 — $6,400.00

Date — Contract

Amount

Brad Shafer 352-589-7333

Project Architect Contact Name and Phone Number

William Hyatt 352-267-6764

Contact Name and Phone Number

Sumter County Board County Commissioner / On Call Plumbing — Bushnell

Project — Location

$33,123.73 — $80,000.00 approx.

Date — Contract

Amount

Ed Lunz 863-602-6130

Project Architect Contact Name and Phone Number

Bruce Atkinson 352-303-5738

Contact Name and Phone Number

VENDOR'S AFFIDAVIT

State of Florida
County of Sumter

Before me personally appeared Mark A. Weber who is *(title)* President of *(the company described herein)* Mark A. Weber Plumbing, Inc. being duly sworn, deposes and says that the foregoing statements are a true and accurate statement of the position of said organization as of the date thereof, and, that the statements and answers to the foregoing experience questionnaire are correct and true as of the date of this affidavit; and, that he/she understands that intentional inclusion of false, deceptive, or fraudulent statements of this application constitutes fraud; and, agrees to furnish any pertinent information requested by Sumter County Board of County Commissioner deemed necessary to verify the statements made in this application or regarding the ability, standing and general reputation of the applicant.

Personally Known ✓ or Produced Identification

Sworn to and subscribed before me this 25 day of April, 2020

Lori Hon

NOTARY PUBLIC - STATE OF FLORIDA
(Signature of Notary Public)

Lori Hon
(Print Name of Notary Public)

LORI HON
Commission # GG 043695
Expires February 28, 2021
Bonded Thru Troy Fain Insurance 800-385-7019

(seal)

This document must be completed and returned with your Submittal

DRUG FREE WORKPLACE CERTIFICATE

I, the undersigned, in accordance with Florida Statute 287.087, hereby certify that,

Mark A. Weber Plumbing, Inc.

(print or type name of firm)

- Publishes a written statement notifying that the unlawful manufacture, distribution, dispensing, possession or use of a controlled substance is prohibited in the workplace named above, and specifying actions that will be taken against violations of such prohibition.
- Informs employees about the dangers of drug abuse in the work place, the firm's policy of maintaining a drug free working environment, and available drug counseling, rehabilitation, and employee assistance programs, and the penalties that may be imposed upon employees for drug use violations.
- Gives each employee engaged in providing commodities or contractual services that are under proposal or bid, a copy of the statement specified above.
- Notifies the employees that as a condition of working on the commodities or contractual services that are under proposal or bid, the employee will abide by the terms of the statement and will notify the employer of any conviction of, please or guilty or nolo contendere to, any violation of Chapter 893, or of any controlled substance law of the State of Florida or the United States, for a violation occurring in the work place, no later than five (5) days after such conviction, and requires employees to sign copies of such written (*) statement to acknowledge their receipt.
- Imposes a sanction on, or requires the satisfactory participation in, a drug abuse assistance or rehabilitation program, if such is available in the employee's community, by any employee who is so convicted.
- Makes a good faith effort to continue to maintain a drug free work place through the implementation of the drug free workplace program.
- "As a person authorized to sign this statement, I certify that the above named business, firm or corporation complies fully with the requirements set forth herein".

Mark Weber

Authorized Signature

4-25-20

Date Signed

State of: Florida

County of: Sumter

Sworn to and subscribed before me this 25 day of April, 2020

Personally known ✓ or Produced Identification _____

(Specify Type of Identification)

Lori Hon

Signature of Notary

My Commission Expires 2-28-21

(seal)

This document must be completed and returned with your Submittal

LORI HON
Commission # GG 043695
Expires February 28, 2021
Bonded Thru Troy Fain Insurance 800-385-7019

STATEMENT OF PUBLIC ENTITY CRIMES

This is a sworn statement under Section 287.133(3)(a), Florida Statutes, on public entity crimes and must be signed in the presence of a notary public or other officer authorized to administer oaths.

1. This sworn statement is submitted with Bid, Proposal or Contract No. ITB #016-0-2020/RS for Sumter County Boiler Replacement Project.

2. This sworn statement is submitted by Mark A. Weber Plumbing, Inc.
   (Name of entity submitting sworn statement)

   whose business address is:
   P.O. Box 1381
   Lake Panasoffkee, FL 33538

   Its Federal Employer Identification Number (FEIN) is 59-3152784. (If the entity has no FEIN, include the Social Security Number of the individual signing this sworn statement: N/A.)

3. I understand that a *Public Entity Crime* as defined in Paragraph 287.133(1)(g), Florida Statutes, is a violation of any State or Federal law by a person with respect to and directly related to the transaction of business with any public entity or with an agency or political subdivision of any other State or with the United States, including, but not limited to, any bid, proposal, reply or contract for goods or services, any lease for real property, or any contract for the construction or repair of a public building or public work, involving antitrust, fraud, theft, bribery, collusion, racketeering, conspiracy, or material misrepresentation.

4. I understand that *convicted* or *conviction* as defined in Paragraph 286.133(1)(b), Florida Statutes, means a finding of guilt or a conviction of a public entity crime, with or without an adjudication of guilt, in any Federal or State trial court of record relating to charges brought by indictment or information after July 1, 1989, as a result of a jury verdict, nonjury trial or entry of a plea of guilty or nolo contendere.

5. I understand that an *affiliate* as defined in Paragraph 287.133 (1)(a), Florida Statutes, means:
   (a) A predecessor or successor of a person convicted of a public entity or crime; or

   (b) An entity under the control of a natural person who is active in the management of the entity and who has been convicted of a public entity crime. *Affiliate* includes those officers, directors, executives, partners, shareholders, employees, members, and agents who are active in the management of an affiliate. The ownership by one person of shares constituting a controlling interest in another person, or a pooling of equipment or income among persons when not for fair market value under an arm's length agreement, shall be a prima facie case that one person controls another person. A person who knowingly enters into a joint venture with a person who has been convicted of a public entity crime in Florida during the preceding thirty-six (36) months shall be considered an *affiliate*.

6. I understand that a *person* as defined in Paragraph 287.133(1)(e), Florida Statutes, means any natural person or entity organized under the laws of any state or of the United States with the legal power to enter into a binding contract and which bids or applies to bid on contracts let by a public entity, or which otherwise transacts or applies to transact business with a public entity. *Person* includes those officers, directors, executives, shareholders, partners, employees, members, and agents who are active in management of an entity.

7. Based on information and belief, the statement which I have marked below is true in relation to the entity submitting this sworn statement. (Please indicate which statement applies.)

   __X__ Neither the entity submitting this sworn statement, nor any officers, directors, executives, partners, shareholders, employees, members, or agents who are active in management of the entity, nor any affiliate of the entity have been charged with and convicted of a public entity crime subsequent to July 1, 1989.

   _____ The entity submitting this sworn statement, or one or more of the officers, directors, executives, partners, shareholders, employees, members, or agents who are active in management of the entity, or an affiliate of the entity have been charged with and convicted of a public entity crime subsequent to July 1, 1989 AND (Please indicate which additional statement applies.)

   _____ There has been a proceeding concerning the conviction before a hearing officer of the State of Florida, Division of Administrative Hearings. The final order entered by the hearing officer did not place the person or affiliate on the convicted Vendor list. (Please attach a copy of the final order.)

   _____ The person or affiliate was placed on the convicted Vendor list. There has been a subsequent proceeding before a hearing officer of the State of Florida, Division of Administrative Hearings. The final order entered by the hearing officer determined that it was in the public interest to remove the person or affiliate from the convicted Vendor list. (Please attach a copy of the final order.)

   _____ The person or affiliate has not been placed on the convicted Vendor list. (Please describe any action taken by or pending with the Department of General Services.)

_____
(Signature)

Sworn to and subscribed before me this 25 day of April, 2020.

Personally Known ✓ _____ Lori Hon _____

OR produced identification _____ Notary Public – State of FLORIDA

_____
Type of identification produced

My commission expires 2-28-21

Lori Hon
(Printed, typed or stamped
Commissioned name of notary public)

This document must be completed and returned with your Submittal

LORI HON
Commission # GG 043695
Expires February 28, 2021
Bonded Thru Troy Fain Insurance 800-385-7019

EXHIBIT B
Bid Form

7375 Powell Road, Suite 200, Wildwood, FL 34785
Telephone: (352) 689-4400
Fax: (352) 689-4401

Re: **ITB 016-0-2020/RS SUMTER COUNTY BOILER REPLACEMENT PROJECT**

1. Having carefully examined the ITB for the project listed above:

   And being familiar with the premises affecting the work, the undersigned proposes and hereby agrees to furnish all labor and material and to perform all work in accordance with said documents for:

   ITB 016-0-2020/RS

Description		
Sumter County Boiler Replacement Project: Bravo Building (This bid will include all labor, materials, equipment, rigging, transportation and supervision required to complete the project).		
Total in Numbers	2	$29,400.68
Description		
Sumter County Boiler Replacement Project: Charlie Building (This bid will include all labor, materials, equipment, rigging, transportation and supervision required to complete the project).		
Total in Numbers	1	$16,671.95
Description		
GRAND TOTAL (for both Bravo and Charlie Buildings)		
Total in Numbers		$46,072.63
Total in Words		Forty six thousand seventy two dollars & sixty three cents

2. In submitting this Bid, it is understood that the right is reserved by the Board of Sumter County Commissioners to reject any, and all bids.

Date: 4/23/2020

Mark A. Weber Plumbing, Inc.
Vendor
By: Mark A. Weber
Title: President
Telephone: 352-303-8490
Address: P.O. Box 1381, Lake Panasoffkee, FL 33538

ANTI-COLLUSION STATEMENT

By signing this form, the Contractor agrees that this quote is made without any other understanding, agreement, or connection with any person, corporation, or firm submitting a quote for the same purpose and that the quote is in all respects fair and without collusion or fraud,

IT IS AGREED BY THE UNDERSIGNED CONTRACTOR, THAT THE SIGNING AND DELIVERY OF THE QUOTE REPRESENTS THE CONTRACTOR'S ACCEPTANCE. OF THE TERMS AND CONDITIONS OF THE FORGOING SPECIFICATIONS AND PROVISIONS, AND IF AWARDED, THIS CONTRACT WILL REPRESENT THE AGREEMENT BETWEEN THE CONTRACTOR AND THE BOARD OF SUMTER COUNTY COMMISSIONERS

NAME OF FIRM: Mark A. Weber Plumbing, Inc.

[Sign in ink in the space provided below]

SIGNED BY: Mark A Weber

TITLE: President

ADDRESS: P.O. Box 1381

CITY & STATE: Lake Panasoffkee, FL 33538

TELEPHONE: 352-303-8490

No quotes will be withdrawn for a period of sixty (60) days subsequent to the opening of quotes, without the consent of the Board of Sumter County Commissioners,

NO QUOTE (Reason):

This document must be completed and returned with your Submittal

HOLD HARMLESS AGREEMENT

The Vendor is required to purchase and maintain minimum limits of $1,000,000 per occurrence for all liability, which includes general liability and, if applicable, automobile liability. Other coverage may be required where applicable.

The Vendor agrees to hold the Board of Sumter County Commissioners harmless against all claims for bodily injury, sickness, disease, death or personal injury or damage to property or loss of use resulting there from, arising out of the agreement, unless such claims are a result of the County's sole negligence.

The Vendor shall purchase and maintain workers' compensation insurance & employer's liability in accordance with Florida Statute Chapter 440.

The Vendor shall also purchase any other coverage required by law for the benefit of employees.

Required insurance shall be documented in Certificates of Insurance and shall be provided to the County representative requesting the service.

By signature upon this form the Vendor stipulates that he/she agrees to the Hold Harmless Agreement, and to abide by all insurance requirements.

Mark A. Weber	Mark A Weber
Vendor-Print Name	**Signature**
ITB # 016-0-2020/RS Boiler Replacement Project	4/23/2020
Project Name	**Date**

The effective dates of this Hold Harmless Agreement shall be for the duration of the contract associated with this project.

This document must be completed and returned with your Submittal

E-Verify /Vendor/SubVendor Certification

E-Verify is a federal system established by the Department of Homeland Security to determine the immigration and work-eligibility status of prospective employees. Detailed E-Verify program information for employers can be found at http://www.dhs.gov/e-verify.

Vendors must certify compliance with the federal E-Verify program for all employees hired on or after the date of registration on the Department of Homeland Security website http://www.dhs.gov/e-verfiy by providing the Memorandum of Understanding electronic signature page with date of registration and company ID number and this E-Verify Certification form. In the case of vendors, this includes obtaining written certification from all sub-vendors who will participate in the performance of the contract. The certification below has been prepared for all County vendors to use for this purpose. All sub-vendor certifications must be kept on file with the contract and made available to the state and/or Sumter County upon request. E-Verify must be obtained prior to the due date established in this formal solicitation.

CERTIFICATION

I certify that the company shown below is in compliance with the above statement and that I am authorized to sign on its behalf.

Name of Company: Mark A. Weber Plumbing, Inc.

Authorized signature: Mark A Weber

Printed name & Title: Mark A. Weber / President

Address: P.O. Box 1381

Date: 4/23/2020

Telephone Number: 352-303-8490

E-mail address: mwplumbing@gmail.com

Sumter County reserves the right to determine how it will respond to any instances of non-compliance or false certification of compliance. Potential Sumter County actions include, but are not limited to, cancellation of the contract and/or suspending or debarring the contract Vendor from performing services in any aspect to the Sumter County.

Please contact the Purchasing Division at 352-689-4400 with questions regarding this requirement.

This document must be completed and returned with your Submittal.

PART 3

BID DOCUMENTS CHECKLIST OF ITEMS REQUIRED TO BE SUBMITTED

The following documents and forms in the following arrangement must accompany each bid or alternate bid submitted:

Documents that are mandatory and MUST accompany the submittal of the bid in order for the submission to be considered:

- One (1) original bid, clearly labeled "Original"
- Bid Cover Page. This is to be used as the first page of the ITB. This form must be fully completed and signed by an authorized officer of the vendor.
- Bidder Certification / Addenda Acknowledgement Form
- Statement of General Terms and Conditions
- A sworn, notarized Statement of Contractor's Experience and Personnel
- A sworn, notarized Drug Free Work Place Certificate must accompany each bid or alternate bid.
- A sworn, notarized Statement of Public Entity Crimes
- Bid / Price Form
- A separate sheet or sheets, clearly identified and numbered, of Exceptions or Deviations from the minimum specifications, must be attached to the Bid Form (if applicable).
- Anti-Collusion Statement
- Hold Harmless Agreement

Documents that are required as part of the submittal but will be considered minor discrepancies if turned in within 24 business hours (Monday – Friday 8:00 a.m. to 5:00 p.m.) after opening of the bid and are found to be in compliance with the purchasing standards of Sumter County:

- Three (3) printed copies of the bid in its entirety; and one (1) electronic single PDF version not password protected of the original submitted bid in its entirety.
- E-Verify Certification Form
- Electronic signature page of the E-Verify Memorandum of Understanding from the Department of Homeland Security. This must be dated prior to the ITB due date.
- Bid Document Checklist of Items Required to be Submitted

- A Certificate of Insurability, acceptable to the County, shall accompany each bid or alternate bid, in the amounts as prescribed by State and Sumter County BOCC .
    - All insurance policies shall be written on companies authorized to do business in the State of Florida and satisfactory to the Sumter County BOCC. Prior to commencing services pursuant to the award of this bid, the Contractor shall furnish to the Sumter County BOCC certificates of insurance showing the required coverage has been procured and paid for in advance. Within thirty (30) days prior to expiration, the Vendor shall provide the Sumter County BOCC with proof that required coverage has been extended.

Date: 4/23/2020

I, Mark A. Weber (name), an authorized officer of Mark A. Weber Plumbing, Inc. (company/vendor), confirm that the above listed documents are provided in our company's bid being submitted to Sumter County and confirm I have read and understand the ITB document in its entirety.

INTENTIONALLY LEFT BLANK

CERTIFICATE OF LIABILITY INSURANCE

DATE (MM/DD/YYYY): 12/18/2019

THIS CERTIFICATE IS ISSUED AS A MATTER OF INFORMATION ONLY AND CONFERS NO RIGHTS UPON THE CERTIFICATE HOLDER. THIS CERTIFICATE DOES NOT AFFIRMATIVELY OR NEGATIVELY AMEND, EXTEND OR ALTER THE COVERAGE AFFORDED BY THE POLICIES BELOW. THIS CERTIFICATE OF INSURANCE DOES NOT CONSTITUTE A CONTRACT BETWEEN THE ISSUING INSURER(S), AUTHORIZED REPRESENTATIVE OR PRODUCER, AND THE CERTIFICATE HOLDER.

IMPORTANT: If the certificate holder is an ADDITIONAL INSURED, the policy(ies) must be endorsed. If SUBROGATION IS WAIVED, subject to the terms and conditions of the policy, certain policies may require an endorsement. A statement on this certificate does not confer rights to the certificate holder in lieu of such endorsement(s).

PRODUCER
Insurance Centre of Dunnellon
20726 W Pennsylvania Ave
Dunnellon FL 34431

CONTACT NAME: HOUSE/COMMERCIAL
PHONE (A/C, No, Ext): (352) 489-1992 FAX (A/C, No): (352) 489-0384
E-MAIL ADDRESS:

INSURER(S) AFFORDING COVERAGE	NAIC #
INSURER A: Owners Insurance Co	32700
INSURER B: Auto-Owners Insurance Company	18988
INSURER C:	
INSURER D:	
INSURER E:	
INSURER F:	

INSURED
Mark A Weber Plumbing Inc
PO Box 1381
Lake Panasoffke FL 33538-1381

COVERAGES **CERTIFICATE NUMBER:** 19/20 **REVISION NUMBER:**

THIS IS TO CERTIFY THAT THE POLICIES OF INSURANCE LISTED BELOW HAVE BEEN ISSUED TO THE INSURED NAMED ABOVE FOR THE POLICY PERIOD INDICATED. NOTWITHSTANDING ANY REQUIREMENT, TERM OR CONDITION OF ANY CONTRACT OR OTHER DOCUMENT WITH RESPECT TO WHICH THIS CERTIFICATE MAY BE ISSUED OR MAY PERTAIN, THE INSURANCE AFFORDED BY THE POLICIES DESCRIBED HEREIN IS SUBJECT TO ALL THE TERMS, EXCLUSIONS AND CONDITIONS OF SUCH POLICIES. LIMITS SHOWN MAY HAVE BEEN REDUCED BY PAID CLAIMS.

INSR LTR	TYPE OF INSURANCE	ADDL INSD	SUBR WVD	POLICY NUMBER	POLICY EFF (MM/DD/YYYY)	POLICY EXP (MM/DD/YYYY)	LIMITS	
A	X COMMERCIAL GENERAL LIABILITY CLAIMS-MADE / X OCCUR GEN'L AGGREGATE LIMIT APPLIES PER: X POLICY / PRO-JECT / LOC OTHER:			78221040	8/1/2019	8/1/2020	EACH OCCURRENCE	$ 1,000,000
							DAMAGE TO RENTED PREMISES (Ea occurrence)	$ 300,000
							MED EXP (Any one person)	$ 10,000
							PERSONAL & ADV INJURY	$ 1,000,000
							GENERAL AGGREGATE	$ 2,000,000
							PRODUCTS - COMP/OP AGG	$ 1,000,000
							Premises/Operations	$
B	AUTOMOBILE LIABILITY ANY AUTO ALL OWNED AUTOS / X SCHEDULED AUTOS HIRED AUTOS / NON-OWNED AUTOS X 19			4902300800	12/5/2019	12/5/2020	COMBINED SINGLE LIMIT (Ea accident)	$ 1,000,000
							BODILY INJURY (Per person)	$
							BODILY INJURY (Per accident)	$
							PROPERTY DAMAGE (Per accident)	$
							Medical payments	$ 2,000
	UMBRELLA LIAB / OCCUR EXCESS LIAB / CLAIMS-MADE DED / RETENTION $						EACH OCCURRENCE	$
							AGGREGATE	$
								$
	WORKERS COMPENSATION AND EMPLOYERS' LIABILITY ANY PROPRIETOR/PARTNER/EXECUTIVE OFFICER/MEMBER EXCLUDED? Y/N N/A (Mandatory in NH) If yes, describe under DESCRIPTION OF OPERATIONS below						PER STATUTE / OTH-ER	
							E.L. EACH ACCIDENT	$
							E.L. DISEASE - EA EMPLOYEE	$
							E.L. DISEASE - POLICY LIMIT	$

DESCRIPTION OF OPERATIONS / LOCATIONS / VEHICLES (ACORD 101, Additional Remarks Schedule, may be attached if more space is required)

CERTIFICATE HOLDER

Betty.Comis@sumtercountyfl.gc

Sumter County Financial Services
7375 Powell Rd
Wildwood, FL 34785

CANCELLATION

SHOULD ANY OF THE ABOVE DESCRIBED POLICIES BE CANCELLED BEFORE THE EXPIRATION DATE THEREOF, NOTICE WILL BE DELIVERED IN ACCORDANCE WITH THE POLICY PROVISIONS.

AUTHORIZED REPRESENTATIVE
Debbie Linton/DEBBIE

© 1988-2014 ACORD CORPORATION. All rights reserved.

Bridgefield Casualty Insurance Company®

A Member of Great American Insurance Group

A Stock Insurer • P.O. Box 988 • Lakeland, FL 33802-0988

WORKERS COMPENSATION AND EMPLOYERS LIABILITY INSURANCE POLICY INFORMATION PAGE

Carrier code 34169

Policy number 196-44373

Item 1. Insured

RISK I.D. 000000000

Name and Mailing Address: Mark A Weber Plumbing, Inc.
PO Box 1381
Lake Panasoffkee, FL 33538

____ Individual
____ Partnership
____ Other
X Corporation
____ Subchapter "S"

Other workplaces not shown above:
SEE EXTENSION OF INFORMATION PAGE ITEM 1

FEIN 59-3152784

Item 2. Policy period

From 09/12/19 to 09/12/20 12:01 a.m. standard time at the address of the insured as stated herein.

Item 3. Coverage

A. Workers Compensation Insurance: Part One of the policy applies to the Workers Compensation Law of the states listed here:
Florida

B. Employers Liability Insurance: Part Two of the policy applies to work in each state listed in Item 3.A. The limits of our liability under Part Two are:

Bodily Injury by Accident	$	1,000,000	each accident
Bodily Injury by Disease	$	1,000,000	each employee
Bodily Injury by Disease	$	1,000,000	policy limit

C. Other States Insurance: Part Three of the policy applies to the states, if any, listed here:
Alabama Arkansas Georgia Indiana Kentucky Louisiana Mississippi North Carolina South Carolina Tennessee Texas

D. This policy includes these endorsements and schedules:
SEE EXTENSION OF INFORMATION PAGE ITEM 3.D

Item 4. Premium

The premium for this policy will be determined by our Manuals of Rules, Classifications, Rates and Rating Plans. All information required below is subject to verification and change by audit.

Classifications	Code No.	Premium Basis: Total Estimated Annual Remuneration	Rate Per $100 of Remuneration	Estimated Annual Premium
SEE EXTENSION OF INFORMATION PAGE ITEM 4				

Total Estimated Annual Premium $ 1,732.00

Minimum Premium $ 599.00

Expense Constant $ 160.00

Countersigned by _____ Date 07/09/19

8063 J.Smith Lanier/Florida Farm Bureau

crs Date Prepared:07/09/19

EXTENSION OF INFORMATION PAGE WC 00 00 01 A - ITEM 1

CARRIER: Bridgefield Casualty Insurance Company
P.O. Box 988
Lakeland, FL 33802-0988
(863)665-6060

AGENCY: J.Smith Lanier/Florida Farm Bureau - 8063
605 Chestnut St Liberty Tower Ste 500
Chattanooga, TN 37450
(770)476-1770

INSURED: Mark A Weber Plumbing, Inc.
DBA:
4069 CR 400
Lake Panasoffkee, FL 33538

POLICY NUMBER: 196 - 44373
POLICY PERIOD: 09/12/19 - 09/12/20

Other workplaces

Mark A Weber Plumbing, Inc.
4069 CR 400
Lake Panasoffkee, FL 33538-0000
FEDERAL ID# 59-3152784
CORPORATION

EXTENSION OF INFORMATION PAGE WC 00 00 01 A - ITEM 3.D

CARRIER: Bridgefield Casualty Insurance Company
P.O. Box 988
Lakeland, FL 33802-0988
(863)665-6060

AGENCY: J.Smith Lanier/Florida Farm Bureau - 8063
605 Chestnut St Liberty Tower Ste 500
Chattanooga, TN 37450
(770)476-1770

INSURED: Mark A Weber Plumbing, Inc.
DBA:
4069 CR 400
Lake Panasoffkee, FL 33538

POLICY NUMBER: 196 - 44373
POLICY PERIOD: 09/12/19 - 09/12/20

Schedule of Endorsements

Form Number:	Edition:	Description:
WC 00 03 08	04-84	Partners, Officers and Others Exclusion Endt
WC 00 04 04	04-84	Pending Rate Change Endt
WC 00 04 06 A	08-95	Premium Discount Endt
WC 00 04 14 A	01-19	90-Day Notification of Change in Ownership Endt
WC 00 04 19	01-01	Premium Due Date Endt
WC 09 04 01	06-87	FL Contracting Classification Premium Adjustment E
WC 09 04 02 A	05-17	FL Experience Rating Modification Factor Endt
WC 09 04 03 B	01-15	FL Terrorism Risk Ins. Program Reauthorization Act
WC 09 04 07	07-13	FL Non-Cooperation with Premium Audit Endt
WC 09 06 06	10-98	FL Employment and Wage Information Release Endt
WC 99 03 03	11-11	Employers Liability Coverage Endt
WC 99 06 01	05-06	FL Legal Action/Collection Endt

Date Prepared: 07/09/19

JIMMY PATRONIS
CHIEF FINANICAL OFFICER

STATE OF FLORIDA
DEPARTMENT OF FINANCIAL SERVICES
DIVISION OF WORKERS' COMPENSATION

*** * CERTIFICATE OF ELECTION TO BE EXEMPT FROM FLORIDA WORKERS' COMPENSATION LAW * ***

CONSTRUCTION INDUSTRY EXEMPTION

This certifies that the individual listed below has elected to be exempt from Florida Workers' Compensation law.

EFFECTIVE DATE: 8/31/2018 **EXPIRATION DATE:** 8/30/2020

PERSON: MARK A WEBER **EMAIL:** MWPLUMBING@GMAIL.COM

FEIN: 593152784

BUSINESS NAME AND ADDRESS:

MARK A. WEBER PLUMBING, INC.

4069 CR 400

LAKE PANASOFFKEE, FL 33538

SCOPE OF BUSINESS OR TRADE:

Plumbing NOC and Drivers

IMPORTANT: Pursuant to Chapter 440.05(14), F.S., an officer of a corporation who elects exemption from this chapter by filing a certificate of election under this section may not recover benefits or compensation under this chapter. Pursuant to Chapter 440.05(12), F.S., Certificates of election to be exempt... apply only within the scope of the business or trade listed on the notice of election to be exempt. Pursuant to Chapter 440.05(13), F.S., Notices of election to be exempt and certificates of election to be exempt shall be subject to revocation if, at any time after the filing of the notice or the issuance of the certificate, the person named on the notice or certificate no longer meets the requirements of this section for issuance of a certificate. The department shall revoke a certificate at any time for failure of the person named on the certificate to meet the requirements of this section.

SUMTER COUNTY BOILER REPLACEMENT AGREEMENT

THIS AGREEMENT (hereinafter referred to as "Agreement") is made and entered into this 12th day of May, 2020, by and between **Board of Sumter County Commissioners** (hereinafter referred to as "Board", or "County"), whose address is 7375 Powell Road, Wildwood, Florida 34785, and Mark A. Weber Plumbing, Inc. (hereafter referred to as "Vendor"), whose address is Post Office Box 1381, Lake Panasoffkee, Florida 33538.

RECITALS

WHEREAS, the Board has need of professional services for ITB 016-0-2020/RS; and

WHEREAS, the parties desire to enter into a written agreement outlining the duties, responsibilities and compensation of Vendor, based on the Vendor's response to ITB 016-0-2020/RS Sumter County Boiler Replacement Project.

NOW, THEREFORE, in consideration of the mutual promises, covenants and agreements contained herein, the receipt and sufficiency of which is hereby acknowledged, the parties agree as follows:

1. The relationship of the Vendor to the Board will be that of a professional Vendor and the Vendor will provide the professional and technical services required under this Agreement in accordance with acceptable professional practices and ethical standards applicable to Vendor's profession, and Vendor will endeavor to provide to the Board services to the best of its ability.

2. Vendor is hereby retained and employed as a Sumter County Contactor, and will work with the Board to provide products and services in accordance with the scope of work outlined in ITB 016-0-2020/RS.

3. The term of this Agreement shall commence on May 12, 2020 and continue in full force for 45 days from the date established in the Notice to Proceed, unless otherwise terminated as provided in paragraph four (4) of this Agreement. The term of this Agreement does not relieve the Vendor of any future responsibility as described in paragraph six (6) of this Agreement.

4. This Agreement may be terminated by either party upon thirty (30) days prior written notice to the other party at the address designated in this Agreement for receiving such notice. If this Agreement is terminated, Vendor shall be authorized to receive payment for all work performed up to the date of termination.

5. With regard to compensation paid to Contractor, Contractor shall furnish to the Board an itemized invoice detailing all of Contractors hours, services, expenses and any other services utilized by the Board. The invoice shall be itemized pursuant to and in accordance with the Fee Schedule, attached hereto as Exhibit B, and incorporated herein *in haec verba.* Contractor shall submit all invoices pursuant to the Local Government Prompt Payment Act, F.S. 218. Contractor acknowledges and agrees that the rates set forth in the Fee Schedule shall remain fixed throughout the duration of this Agreement, including both the Initial Term and any Renewal Term, and thereafter shall only be adjusted by mutual written agreement of both parties.

6. General Considerations.

   a. All reports, drawings, designs, specifications, notebooks, computations, details, and calculation documents prepared by Vendor and presented to the Board pursuant to this Agreement are and remain the property of the Board as instruments of service.
   b. All analyses, data, documents, models, modeling, reports and tests performed or utilized by Vendor shall be made available to the Board upon request and shall be considered public records.
   c. Vendor is required to: (i) keep and maintain public records required by Board; (ii) upon request from Board's custodian of public records, provide Board with a copy of the requested records or allow the records to be inspected or copied within a reasonable time at a reasonable or as otherwise provided by law; (iii) ensure that public records that are exempt or, confidential and exempt, from public records disclosure requirements are not disclosed except as authorized by law for the duration of this Agreement and following completion of this Agreement if Vendor does not transfer the records to Board; (iv) upon completion of this Agreement, transfer, at no cost, to Board all public records in possession of Vendor or keep and maintain public records required by Board.
   d. If Vendor transfers all public records to Board upon completion of this Agreement, Vendor shall destroy any duplicate public records that are exempt or, confidential and exempt, from public records disclosure requirements. If Vendor keeps and maintains public records upon completion of this Agreement, Vendor shall meet all applicable requirements for retaining public records. All records stored electronically must be provided to Board, upon request from Board's custodian of public records, in a format that is compatible with the information technology systems of Board.
   e. Vendor shall keep all books, records, files, drawings, plans and other documentation, including all electronically stored items, which concern or relate to the services required hereunder (the "Records"), for a minimum of five (5) years from the date of expiration or termination of this Agreement, or as otherwise required by any applicable law, whichever date is later. The Board shall have the right to order, inspect, and copy all the Records as often as it deems necessary during any such period-of-time. The right to audit, inspect, and copy Records shall include all of the records of sub-Vendors (if any).
   f. Vendor shall, at all times, comply with the Florida Public Records Law, the Florida Open Meeting Law and all other applicable laws, rules and regulations of the State of Florida.
   g. **IF THE VENDOR HAS QUESTIONS REGARDING THE APPLICATION OF CHAPTER 119, FLORIDA STATUTES, TO THE VENDORS' DUTY TO PROVIDE PUBLIC RECORDS RELATING TO THIS AGREEMENT, CONTACT THE CUSTODIAN OF PUBLIC RECORDS AT** 352-689-4400, Sumter County Board of County Commissioners, 7375 Powell Road, Wildwood, Florida 34785 or via email at Records@sumtercountyfl.gov.
   h. If applicable, vendor shall, at all times, carry General Liability, Automobile and Worker's Compensation Insurance pursuant to the insurance requirements in ITB 010-0-2020/RS, naming Board as both a certificate holder and an additional insured in each such policy.

i. Upon Vendor's written request, the Board will furnish, or cause to be furnished, such reports, studies, instruments, documents, and other information as Vendor and Board mutually deem necessary, and Vendor may rely upon same in performing the services required under this Agreement.

7. The Vendor may be required to provide additional services to the Board on challenges, public protests, administrative hearings or similar matters. The Vendor shall be available to represent the Board, serve as an expert witness, and provide supporting documentation as necessary. Should any other professional services be called for by the Board that are not otherwise set forth in this Agreement or any of its attachments or exhibits, charges for these services shall be agreed upon in advance by the parties hereto.

8. The Contract Documents, which comprise the entire Contract between Board and Vendor and which are further incorporated herein by reference, consist of the following:

    a. ITB 016-0-2020/RS
    b. Vendor' s Bid in Response to ITB 016-0-2020/RS
    c. This Agreement
    d. Permits / Licenses
    e. All Bid Addenda Issued Prior to Opening Date
    f. All Modifications and Change Orders Issued

9. Vendor shall be solely and entirely responsible for its tortious acts and for the tortious acts of its agents, employees, or servants during the performance of this Agreement. Vendor shall indemnify and save harmless the Board, its agents, employees and officers from and against all liabilities, claims, demands, or actions at law and equity including court costs and attorney' s fees that may hereafter at any time be made or brought by anyone for the purposes of enforcing a claim on account of any injury or damage allegedly caused or occurring to any person or property in which was caused in whole or in part by any tortious, wrongful, or intentional acts or omissions of Vendor, its agents, or employees during performance under this Agreement. The foregoing is not intended, and shall not be construed, as a waiver by Board of the benefits of Section 768.28, *Florida Statutes*.

10. Vendor is, and shall be, in the performance of all services and activities under this Agreement, an independent contractor, and not an employee, agent, or servant of Board; and no provisions of Board's personnel policies shall apply to this Agreement. None of the benefits provided by Board to its employees including, but not limited to, worker' s compensation insurance and unemployment insurance, are available from Board to Vendor, or its employees, agents or servants. Vendor assumes responsibility for payment of all federal, state and local taxes imposed or required of Vendor including but not limited to FICA, FUTA, unemployment insurance, Social Security and income tax laws for which Vendor as employer is responsible. Vendor shall be solely responsible for any worker' s compensation insurance required by law and shall provide the Board with proof of insurance upon demand. The parties agree that Board shall not: (a) pay dues, licenses or membership fees for Vendor; (b) require attendance by Vendor, except as otherwise specified herein; (c) control the method, manner or means of performing under this Agreement, except as otherwise specified herein; or (d) restrict or prevent Vendor from working for any other party.

11. **Force Majeure**. No party shall be liable or responsible to the other party, nor be deemed to have defaulted under or breached this Agreement, for any failure or delay in fulfilling or

performing any term of this Agreement (except for any obligations to make payments to the other party hereunder)], when and to the extent such failure or delay is caused by or results from the following force majeure events ("**Force Majeure Events**"): (a) acts of God; (b) flood, fire, earthquake or explosion; (c) war, invasion, hostilities (whether war is declared or not), terrorist threats or acts, riot, warlike operation, insurrection, rebellion, revolution, military or usurped power, sabotage or other civil unrest; (d) strikes, embargoes, blockades, labor stoppages, lockouts or slowdowns or other industrial disturbances or inability to obtain necessary materials or services (e) governmental delay regarding permits or approvals; (f) action by any governmental authority; (g) national or regional emergency; (h) shortage of adequate power or transportation facilities; or (j) other similar events beyond the reasonable control of the party impacted by the Force Majeure Event (the "**Impacted Party**") and provided further, however, that such performance shall be resumed and completed with due diligence and reasonable dispatch as soon as the contingency causing the delay or impossibility shall abate.

12. **Attorney's Fees; and Costs of Enforcement.** In the event suit is commenced to enforce this Agreement, costs of said suit including reasonable attorneys' fees in all proceedings, trials, investigations, appearances, appeals and in any bankruptcy proceeding or administrative proceeding shall be paid to the prevailing party by the non-prevailing party. In the event of default by either party hereto, the defaulting party shall be liable for all costs and expenses, including reasonable attorney' s fees and costs incurred by the other party in enforcing its rights hereunder, whether litigation be instituted or not, at the trial court and appellate court level.

13. **Law of the Agreement; Jurisdiction and Venue.** The Parties agree that the laws of the State of Florida shall govern any dispute arising from or related to this Agreement. The Parties to this Agreement agree that venue and jurisdiction is mandated to lie only in the state courts located in Sumter County, Florida. Removal of this case to federal court is not permitted. Litigation in federal court is precluded by agreement of the parties hereto. If, even though precluded by agreement of the Parties hereto, litigation arising from or based upon this contract should be mandated by a court of competent jurisdiction issued pursuant to a duly noticed hearing giving Sumter County adequate time to respond and all of the benefits of due process to lie in the proper venue or jurisdiction of a federal court, that federal court shall only be in the Middle District of Florida, Ocala Division. The Parties further agree that entry into this agreement constitutes irrevocable consent that the exclusive venue for any such dispute shall lie solely in the state or county courts in and for Sumter County, Florida. The Parties expressly and irrevocably waive any right(s) to removal of any such dispute to any federal court, unless the federal court has exclusive jurisdiction; in such cases, the parties agree that the exclusive venue for any such disputes shall be the United States District Court, in and for the Middle District of Florida, Ocala Division. Process in any action or proceeding referred to in this paragraph may be served on any party anywhere in the world, such party waives any argument that said party is not subject to the jurisdiction of the state courts located in Sumter County, Florida and that the laws of the state of Florida.

14. **Entire Agreement**. This Agreement contains the entire agreement of the Parties and may not be changed except by written agreement duly executed by the Parties hereto. This Agreement supersedes any prior understandings or agreements between the Parties, and there are no representations, warranties, or oral agreements other than those expressly set forth herein.

15. **Assignment.** This Agreement shall not be assigned nor may any portion of the obligations contemplated in this Agreement be subcontracted to another party without prior written approval of County. No such approval by County of any assignment or subcontract shall be deemed in any event or in any manner to provide for the incurrence of any obligation of County. All such assignments and subcontracts shall be subject to the terms and conditions of this Agreement and to any conditions of approval that County shall deem necessary.

16. **Compliance with Licenses, Permits, and Applicable Laws**. In performing services hereunder, Vendor shall comply with all federal, state and local laws and regulations. Vendor shall be responsible for identifying and obtaining all permits necessary to complete the scope of services. Vendor shall be responsible for obtaining, at its sole cost and expense, all necessary license licenses and other governmental approvals required in order for Vendor to provide the type of services required hereunder.

17. **E-Verify**: system established by the U.S. Department of Homeland Security to determine the immigration and work-eligibility status of prospective employees.

18. The Vendor agrees to certify to Board that Vendor is in compliance with the federal E-Verify program, including obtaining written certification from all sub-Vendors who will participate in the performance of scope of services contemplated in this Agreement. All sub-Vendor certifications must be kept on file by the Vendor and made available to the state and/or the Board upon request. The Board reserves the right to take action against any Vendor deemed to be non-compliant; potential actions may include, but are not limited to, cancellation of this Agreement and/or suspending or debarring the Vendor from performing services for the County.

19. **Conflict of Interest**. Vendor shall notify Board in writing of any commitments during the term of this Agreement which may constitute a potential or actual conflict of interest with respect to the scope of services to be performed for the Board.

20. **Corporate Status; Change of Ownership.** If Vendor is a non-governmental, corporate entity:

    a. *Corporate Status*. Vendor shall ensure that the corporate status shall continuously be in good standing and active and current with the state of its incorporation and the State of Florida and at all times throughout the Term, and any renewal or extension hereof. Failure of the Vendor to keep its corporate status active and current shall constitute a material breach under the terms of this Agreement.

    b. *Change of Ownership*. Vendor shall notify County immediately upon any change in corporate ownership or any substitution of the key professional assigned (the " Key Person") to perform under this Agreement (" Change of Ownership"). County shall have the option of cancelling this Agreement if a Change of Ownership is not suitable to it, provided however, no cancellation shall relieve the Vendor of its obligations to perform the work described herein or for liability for breach of same. A Change of Ownership means the occurrence of any one or more of the following: a sale, lease, or other disposition of 50% or more of the interest or assets of the company or corporation; a merger, reverse merger or consolidation with another entity; a

transaction wherein a third-party becomes the beneficial owner having fifty (50%) percent or more interest in the corporation or company; or fifty (50%) percent or more of the total number of votes that may be cast for any act of the entity.

21. **Default.** Neither Party shall declare the other party in default of any provision of this Agreement without giving the other party at least ten (10) days advance written notice of intention to do so, during which time the other party shall have the opportunity to remedy the default. The notice shall specify the default with particularity.

22. **Dispute Resolution.** All disputes arising out of or in connection with this Agreement shall be attempted to be settled through good-faith negotiation between the Parties, followed if necessary within thirty (30) days by professionally-assisted mediation. Any mediator so designated must be acceptable to each Party. The mediation will be conducted as specified by the mediator and agreed upon by the Parties. The Parties agree to discuss their differences in good faith and to attempt, with the assistance of the mediator, to reach an amicable resolution of the dispute. The mediation will be treated as a settlement discussion and therefore will be confidential. The mediator may not testify for either Party in any later proceeding relating to the dispute. No recording or transcript shall be made of the mediation proceedings. Each Party will bear its own costs in the mediation. The fees and expenses of the mediator will be shared equally by the Parties. Failing resolution through negotiation or mediation, either Party may file an action in a court of competent jurisdiction or other appropriate remedy available in law or equity as defined herein below.

23. **Jointly Drafted.** The Parties agree that this Agreement is entered into knowingly and voluntarily, after having the opportunity to fully discuss it with an attorney. Having had the opportunity to obtain the advice of legal counsel to review, comment upon, and redraft this Agreement, the Parties agree that this Agreement shall be construed as if the parties jointly prepared it so that any uncertainty or ambiguity shall not be interpreted against any one party and in favor of the other.

24. **Parties Acknowledgement; Parties Bound**. The Parties acknowledge that they have read this Agreement, and that they understand the terms and conditions herein and that the terms have been fully and completely explained to the Parties prior to the execution thereof. Each party acknowledges that the other party has made no warranties, representations, covenants, or agreements, express or implied, except as expressly contained in this Agreement. Further, the Parties have caused this Agreement to be executed on their respective behalf by the authorized officer whose signature appears below under their respective name, to be effective as of the date first written above. This Agreement shall inure to the benefit of and be binding upon the Parties, their successors, heirs, and personal representatives.

25. **Waiver**. The waiver by any party hereto of a breach of any provision of this Agreement shall not operate or be construed as a waiver of any subsequent breach by any party.

26. **Time is of the Essence**. Time shall be of the essence of this Agreement.

27. **Survivability.** Any provision of this Agreement which obligates any of the Parties to perform an obligation either before the commencement of the Term or after the expiration of the Term, or any renewal or extension thereof, shall be binding and enforceable notwithstanding that performance is not within the Term, and the same shall survive.

28. **Severability.** Whenever possible each provision and term of this Agreement will be interpreted in a manner to be effective and valid but if any provision or term of this Agreement is held to be prohibited or invalid, then such provision or term will be ineffective only to the extent of such prohibition or invalidity, without invalidating or affecting in any manner whatsoever the remainder of such provision or term or the remaining provisions or terms of this Agreement.

29. **Counterparts.** This Agreement may be executed in a number of identical counterparts and a facsimile or electronic/digital copy shall be treated as an original. If so executed, each of such counterparts is to be deemed an original for all purposes, and all such counterparts shall, collectively, constitute one agreement. In making proof of this Agreement, it shall not be necessary to produce or account for more than one such counterpart.

30. **Section and Paragraph Headings.** Captions or paragraph headings herein contained are for organizational convenience only and shall not be constructed as material provisions of this agreement or to limit any provisions hereunder.

31. **Cooperation; Supplementary Actions**. All Parties agree to cooperate fully and to execute any supplementary documents, and to take any additional actions that may be necessary or appropriate to give full force and effect to the basic terms and intent of this Agreement, and which are not inconsistent with its terms.

32. **Miscellaneous.** Whenever the context shall so require, all words in this Agreement of one gender shall be deemed to include the other gender.

33. **Incorporation of Recitals**. Each of the WHEREAS clauses listed above are hereby re-alleged and incorporated into this Agreement as if otherwise fully stated herein.

34. **Notice.** Whenever any notice, demand or request is required or permitted hereunder, such notice, demand or request shall be made in writing and shall be personally delivered to the individuals listed below, sent via prepaid courier or overnight courier, or deposited in the United States mail, registered or certified, return receipt requested, postage prepaid, addressed to the addresses (and individuals) set forth below. No other form of electronic communications (Facebook, Twitter, Text) will be deemed Notice.

FOR THE BOARD	FOR THE VENDOR
Name: Bradley S. Arnold	Name:
Address:7375 Powell Road, Wildwood, FL 34785	Address:
Title: County Administrator	Title:
Date:	Date:

IN WITNESS WHEREOF, the parties have signed this agreement the day and year first above written.

ATTEST:

By: _____

SUMTER COUNTY
BOARD OF COUNTY COMMISSIONERS

_____

By: Chairman

Date Signed: _____

ATTEST:

By: _____

MARK A. WEBER PLUMBING, INC.

_____

By: _____

Date Signed: _____

EXHIBIT B
Bid Form

7375 Powell Road, Suite 200, Wildwood, FL 34785
Telephone: (352) 689-4400
Fax: (352) 689-4401

Re: **ITB 016-0-2020/RS SUMTER COUNTY BOILER REPLACEMENT PROJECT**

1. Having carefully examined the ITB for the project listed above:

   And being familiar with the premises affecting the work, the undersigned proposes and hereby agrees to furnish all labor and material and to perform all work in accordance with said documents for:

   ITB 016-0-2020/RS

Description		
Sumter County Boiler Replacement Project: Bravo Building (This bid will include all labor, materials, equipment, rigging, transportation and supervision required to complete the project).		
Total in Numbers	2	$29,400.68
Description		
Sumter County Boiler Replacement Project: Charlie Building (This bid will include all labor, materials, equipment, rigging, transportation and supervision required to complete the project).		
Total in Numbers	1	$16,671.95
Description		
GRAND TOTAL (for both Bravo and Charlie Buildings)		
Total in Numbers		$46,072.63
Total in Words		Forty six thousand seventy two dollars & sixty three cents

2. In submitting this Bid, it is understood that the right is reserved by the Board of Sumter County Commissioners to reject any, and all bids.

Date: 4/23/2020

Mark A. Weber Plumbing, Inc.
Vendor
By: Mark A. Weber
Title: President
Telephone: 352-303-8490
Address: P.O. Box 1381, Lake Panasoffkee, FL 33538

SUMTER COUNTY BOARD OF COUNTY COMMISSIONERS
EXECUTIVE SUMMARY

SUBJECT: **Approval of the Deed and Right-of-Way Transfer for Parcel 101 to the Florida Department of Transportation (FDOT) for the SR 50 Widening Project (FDOT Project No. 435859-3)**

REQUESTED ACTION: **Staff Recommends Approval**

Meeting Type: Regular Meeting **DATE OF MEETING:** **5/12/2020**

CONTRACT: ☐ N/A Vendor/Entity: FDOT
Effective Date: Termination Date: N/A
Managing Division / Dept: **Engineering**

BUDGET IMPACT: N/A
FUNDING SOURCE: **N/A**
Type: N/A **EXPENDITURE ACCOUNT:** **N/A**

HISTORY/FACTS/ISSUES:

The State of Florida Department of Transportation (FDOT) proposes to construct State Road No. 50, Section No. 18030, Financial Project No. 435859-3, in Sumter County, Florida, within the limits of the Hernando/Sumter County Line/US 301 to East of CR 478A.

CR 757 will be realigned to intersect SR 50 at ninety-degrees as part of the SR 50 widening project. ROW is required to achieve this realignment. Parcel 101 is the pavement and ROW of CR 757, where it currently intersects SR 50. FDOT requires this parcel for flood plain compensation and to complete the ROW acquisition for the SR 50 project.

The transfer of Parcel 101 is in the best interest of the County, and FDOT has made application to Sumter County to execute and deliver to the FDOT a Deed and Resolution, in favor of the State of Florida, and said request having been duly considered.

Attached is the Deed and Resolution for execution by the Board that was prepared by FDOT and reviewed and approved for execution by the County Attorney.

Staff recommends approval.

Prepared by: **Deborah L. Snyder** **Grammarly Check** ☒

03-BSD03-03/07
December 4, 2019
This instrument prepared by
Marika Tremblay
Under the direction of
FREDRICK W. LOOSE, ATTORNEY
Department of Transportation
719 South Woodland Boulevard
Deland, Florida 32720-6834

PARCEL NO. 101.1
SECTION 18030
F.P. NO. 435859 3
STATE ROAD 50
COUNTY SUMTER

COUNTY DEED

THIS DEED, made this _____ day of _____, _____ by SUMTER COUNTY, a political subdivision of the State of Florida, grantor, to the STATE OF FLORIDA DEPARTMENT OF TRANSPORTATION, grantee: (Wherever used herein the terms "grantor" and "grantee" include all the parties to this instrument and the heirs, legal representatives and assigns of individuals, and the successors, and assigns of organizations).

WITNESSETH: That the grantor, for and in consideration of the sum of $1.00 and other valuable considerations, receipt and sufficiency being hereby acknowledged, hereby grants, bargains, sells, aliens, remises, releases, conveys and confirms unto the grantee, all that certain land situate in Sumter County, Florida, viz:

PARCEL 101 **SECTION 18030**
FEE SIMPLE **F.P. NO. 435859-3**

PART A

THAT PART OF:

That part of County Road 757 lying in the Southeast 1/4 of the Southeast 1/4 of Section 22 and the Southwest 1/4 of the Southwest 1/4 of Section 23, Township 22 South, Range 22 East, Sumter County, Florida.

DESCRIBED AS FOLLOWS:

Commence at a nail and disk stamping illegible, marking the Northwest corner of the Southwest 1/4 of Section 23, Township 22 South, Range 22 East, Sumter County, Florida, as shown on the Florida Department of Transportation Right of Way Map for State Road 50, Section 18030,

Financial Project Number 435859-3; thence South 00°06'45" East, along the West line of the Southwest 1/4 of said Section 23, a distance of 2201.69 feet to the intersection with the existing Easterly Right of Way Line of County Road 757 as shown on said map, said point lying on a non-tangent curve, concave Southwesterly, having a radius of 90.00 feet and being the POINT OF BEGINNING; thence departing said West line run the following two courses along said Easterly Right of Way Line; from a tangent bearing of South 34°09'42" East, run Southerly 53.71 feet along the arc of said curve, through a central angle of 34°11'38" to a point of tangency; thence South 00°01'56" West, a distance of 19.36 feet; thence departing said Easterly Right of Way Line, run South 37°43'25" West, a distance of 49.07 feet to the intersection with the existing Westerly Right of Way Line of County Road 757 as shown on said map; thence the following two courses along said Westerly Right of Way Line; run North 00°01'56" East, a distance of 58.19 feet to a point of curvature of a curve concave Southwesterly and having a radius of 60.00 feet; thence run Northwesterly 51.42 feet along the arc of said curve, through a central angle of 49°05'55" to the intersection with the existing Southeasterly Right of Way Line of State Road 50 as shown on said map; thence departing said Westerly Right of way Line, run North 28°58'24" East along said Southeasterly Right of Way Line, a distance of 30.44 feet to the intersection with the aforesaid Easterly Right of Way Line and a point on a non-tangent curve, concave Southwesterly and having a radius of 90.00 feet; thence from a tangent bearing of South 53°05'08" East, run Southeasterly 29.73 feet along the arc of said curve and said Easterly Right of Way Line, through a central angle of 18°55'26" to the POINT OF BEGINNING.

CONTAINING 3,186 square feet, more or less.

AND

PART B

THAT PART OF:

That part of County road 755 lying in the Southeast 1/4 of the Southeast 1/4 of Section 22 and the Southwest 1/4 of the Southwest 1/4 of Section 23, Township 22 South, Range 22 East, Sumter County, Florida.

DESCRIBED AS FOLLOWS:

Commence at a nail and disk stamping illegible, marking the Northwest corner of the Southwest 1/4 of Section 23, Township 22 South, Range 22 East, Sumter County, Florida, as shown on the Florida Department of Transportation Right of Way Map for State Road 50, Section 18030, Financial Project Number 435859-3; thence South 00°06'45" East, along the West line of the Southwest 1/4 of said Section 23, a distance of 1940.69 feet to the POINT OF BEGINNING; thence departing said East line, run North 82°20'57" East, a distance of 18.48 feet to the

intersection with the existing Northwesterly Right of Way Line of State Road 50 as shown on said map and a point on a non-tangent curve, concave Southeasterly and having a radius of 1484.27 feet; thence from a tangent bearing of South 3r26'41" West, run Southwesterly 87.62 feet along the arc of said curve and said Northwesterly Right of Way Line, through a central angle of 03°22'56" to the intersection with the West Right of Way Line of County Road 755 as shown on said map; thence departing said Northwesterly Right of Way Line, run North 00°06'45" West along said West Right of Way Line, a distance of 64.20 feet; thence departing said West Right of Way Line, run North 82°20'57" East, a distance of 33.29 feet to the POINT OF BEGINNING.

CONTAINING 1,610 square feet, more or less.

AND

PART C

THAT PART OF:

That part of County Road 478A lying in the Southwest 1/4 of Section 23, Township 22 South, Range 22 East, Sumter County, Florida.

DESCRIBED AS FOLLOWS:

Commence at a nail and disk stamping illegible, marking the Northwest corner of the Southwest 1/4 of Section 23, Township 22 South, Range 22 East, Sumter County, Florida, as shown on the Florida Department of Transportation Right of Way Map for State Road 50, Section 18030, Financial Project Number 435859-3; thence South 00°06'45" East, along the West line of the Southwest 1/4 of said Section 23, a distance of 1333.30 feet to the Southwest corner of the Northwest 1/4 of the Southwest 1/4 of said Section 23; thence departing said West line, run South 89°16'05" East along the South line of the Northwest 1/4 of the Southwest 1/4 of said Section 23, a distance of 1213.66 feet to the intersection with the existing Southerly Right of Way Line of County Road 478A as shown on said map, said point being on a non-tangent curve, concave Southwesterly, having a radius of 128.71 feet and being the POINT OF BEGINNING; thence the following two courses along said Southerly Right of Way Line; from a tangent bearing of North 58°28'01" West, run Northwesterly 30.94 feet along the arc of said curve, through a central angle of 29°33'01"; thence North 88°01'02" West, a distance of 174.25 feet to a point on a non-tangent curve, concave Southeasterly, having a radius of 2391.83 feet; thence departing said Southerly Right of Way Line, from a tangent bearing of North 73°00'06" East, run Northeasterly 133.95 feet along the arc of said curve, through a central angle of 03°12'32" to the intersection with the Northerly Right of Way Line of said County Road 478A; thence the following three courses along said Northerly Right of Way Line; run South 88°01'02" East, a distance of 46.43 feet to a point of curvature of a curve concave Southwesterly and having a radius of 100.00 feet; thence run

Southeasterly 72.20 feet along the arc of said curve, through a central angle of 41°22'09" to a point of tangency; thence South 46°38'53" East, a distance of 42.37 feet to the intersection with the North Right of Way Line of State Road 50 as shown on said map; thence departing said Northerly Right of Way Line, run South 89°57'07" West along said North Right of Way Line, a distance of 58.22 feet to the intersection with the aforesaid Southerly Right of Way Line and a point on a non-tangent curve, concave Southwesterly, having a radius of 60.00 feet; thence departing said North Right of Way Line, from a tangent bearing of North 46°34'36" West, run Northwesterly 12.45 feet along the arc of said curve, through a central angle of 11°53'25" to the POINT OF BEGINNING.

CONTAINING 7,657 square feet, more or less.

PARTS A, B AND C CONTAINING IN THE AGGREGATE 12.453 square feet, more or less.

This legal description prepared under the direction of:
H. Paul deVivero, P.L.S. No. 4990
Geodata Consultants, Inc.
1349 S. International Parkway, Suite 2401
Lake Mary, Florida 32746

TOGETHER with all tenements, hereditaments and appurtenances thereto belonging or in anywise appertaining.

TO HAVE AND TO HOLD, the same together with the appurtenances thereunto belonging or in anywise appertaining, and all the estate, right, title, interest, lien, equity and claim whatsoever of the said grantor, either in law or equity, to the said grantee forever.

PROVIDED that the following rights are reserved to Grantor:

1. The Grantor shall have the right to construct, operate, maintain, improve, add to, upgrade, remove, and relocate facilities on, within, and upon the lands described herein in accordance with the F.D.O.T.'s current minimum standards for such facilities as required by the F.D.O.T. Utility Accommodation Manual in effect at the time the agreement is executed. Any new construction or relocation of facilities within the lands will be subject to prior approval by the F.D.O.T. Should the F.D.O.T. fail to approve any new construction or relocation of facilities by the Grantor or require the Grantor to alter, adjust, or relocate its facilities located within said lands, the F.D.O.T. hereby agrees to pay the cost of such alteration, adjustment, or

relocation, including, but not limited to, the cost of acquiring appropriate easements.

2. Notwithstanding any provisions set forth herein, the terms of the utility permits shall supersede any contrary provisions, with the exception of the provision herein with reimbursement rights.

3. The Grantor shall have a reasonable right to enter upon the lands described herein for the purposes outlined in Paragraph 1 above, including the right to trim such trees, brush and growth which might endanger or interfere with such facilities, provided that such rights do not interfere with the operation and safety of the F.D.O.T.'s facilities.

4. The Grantor agrees to repair any damage caused by the Grantor to F.D.O.T.'s facilities and to indemnify to the extent permitted under Florida Law the F.D.O.T. against any loss or damage resulting from the Grantor exercising its rights outlined in Paragraphs 1 and 3 above.

IN WITNESS WHEREOF, the said grantor has caused these presents to be executed in its name by its Board of County Commissioners acting by the Chairperson or Vice-Chairperson of said Board, the day and year aforesaid.

ATTEST: _____
CLERK & AUDITOR

By: _____
Deputy Clerk

BOARD OF COUNTY COMMISSIONERS
SUMTER COUNTY, FLORIDA

By: _____

Print: _____
Chairman

December 4, 2019
This instrument prepared by
Marika Tremblay
Under the direction of
FREDRICK W. LOOSE, ATTORNEY
Department of Transportation
719 South Woodland Boulevard
Deland, Florida 32720-6834

PARCEL NO. 101.1
SECTION 18030
F.P. NO. 435859 3

STATE ROAD 50
COUNTY SUMTER

RESOLUTION

ON MOTION of Commissioner _____, seconded by Commissioner _____, the following Resolution was adopted:

WHEREAS, the State of Florida Department of Transportation proposes to construct or improve State Road No. 50, Section No. 18030, F.P. No. 435859-3 in Sumter County, Florida: and

WHEREAS, it is necessary that certain lands now owned by Sumter County be acquired by the State of Florida Department of Transportation: and

WHEREAS, said property is not needed for County purposes: and

WHEREAS, the State of Florida Department of Transportation has made application to said County to execute and deliver to the State of Florida Department of Transportation a deed, or deeds, in favor of the State of Florida Department of Transportation, conveying all rights, title and interest that said County has in and to said lands required for transportation purposes, and said request having been duly considered.

NOW THEREFORE, BE IT RESOLVED by the Board of County Commissioners of Sumter County, that the application of the State of Florida Department of Transportation for a deed, or deeds, is for transportation purposes which are in the public or community interest and for public welfare and the land needed for transportation purposes is not needed for county purposes; that a deed, or deeds, in favor of the State of Florida Department of Transportation conveying all right, title and interest of Sumter County in and to said lands should be drawn and executed by the Chairman on behalf of this Board of County Commissioners.

PARCEL NO. 101.1
SECTION 18030
F.P. NO. 435859 3
PAGE 2

BE IT FURTHER RESOLVED that a certified copy of this Resolution be forwarded forthwith to the State of Florida Department of Transportation at 719 South Woodland Blvd., Deland, Florida, 32720-6834.

DONE AND RESOLVED this _____ day of _____, 2020, at_____

Sumter County, Florida. Time adopted: _____ p.m.

ATTEST: _____
CLERK & AUDITOR

BOARD OF COUNTY COMMISSIONERS
SUMTER COUNTY, FLORIDA

By: _____
Deputy Clerk

By: _____

Print: _____
Chairman

Florida Department of Transportation

RON DESANTIS
GOVERNOR

719 S. Woodland Boulevard
DeLand, Florida 32720-6834

KEVIN J. THIBAULT, P.E.
SECRETARY

NOTICE TO OWNER

Date: 12/14/19

Sumter County
209 N. Florida St.
Bushnell, FL 33513

ITEM/SEGMENT #:	4358593
MANAGING DISTRICT:	05
F.A.P. #:	
STATE ROAD #:	SR 50
COUNTY:	Sumter
PARCEL #:	101

Dear Property Owner,

The Florida Department of Transportation is planning the following improvement of the above referenced transportation facility:

Widening of SR 50

Our research shows you own property needed for this project. This letter, along with the enclosed pamphlet entitled **Acquisition Process**, explains your rights and options and the process we must follow by law in acquiring your property. The following enclosed documents identify the property that is needed:

Legal Description and/or Right of Way Map

If you no longer own this property, please refer to the enclosed questionnaire.

We recognize that a proposed transportation project, particularly one which requires the acquisition of private property, will usually result in many questions and concerns. Please be assured you will have sufficient time to have your questions answered, to consider and understand your rights, options and responsibilities, and make all necessary arrangements. Throughout this process, we will do our best to ensure your questions are answered, that you are treated fairly and receive all of the rights you are guaranteed by law, and that you receive a fair price for your property.

Under Federal and State law, you are entitled to certain rights and protections when the State must acquire real estate from you. The following is a summary of your rights:

- You may accompany the Department's appraiser when your property is inspected as part of the process for valuing your property.
- You may obtain copies of the Department's appraisal, right of way maps and construction plans.
- We will make a written offer to you to purchase your property and will negotiate with you, in good faith, to reach a mutually acceptable purchase price.
- If we cannot agree on a purchase price, we will not file a condemnation lawsuit until at least 30 days after you receive our initial written offer.
- You will receive no less than full compensation for the property acquired. Full compensation includes, the value of the real estate acquired together with damages, if any, to your remaining property.
- You may be eligible for relocation assistance benefits if you are required to move or move personal possessions from the property we acquire.
- You may receive reimbursement for reasonable attorney fees and other reasonable costs you incur for appraisal and other services associated with the Department's acquisition.

Your rights and options are more fully explained in the enclosed pamphlet entitled **Acquisition Process**. We encourage you to read this pamphlet carefully and contact us if you have any questions.

You may be contacted by attorneys, appraisers or others requesting a commitment from you to use their services in dealing with the Department. As previously mentioned, the Department will pay for certain types of services. However, by law, there are limitations placed on what the Department can pay. We encourage you to contact us and allow us to fully explain our reimbursement process.

Over the coming months, you will be contacted by various Department representatives who will schedule property inspections, assess your relocation needs, and negotiate with you for the purchase of your property. If you have questions about any aspect of our acquisition process or if you have information that would help us to determine a fair value for your property or help us provide service to you, please let them know. Regardless of whether or not we reach an agreement on the purchase of your property, we will do our best to be sensitive and responsive to your needs.

I encourage you to fill out and return the enclosed questionnaire in the postage-paid envelope provided. This information will help us begin working with you to reach a mutually acceptable settlement for your property. If you experience any problems, please do not hesitate to contact:

Diane C. Taylor, Right of Way Agent
719 South Woodland Blvd, MS 551
DeLand, FL 32720-6834
(386) 943-5032

Sincerely,

C. Jack Adkins
District Right of Way Manager
By: Diane C. Taylor

Enclosures:

Questionnaire
Return Envelope
Legal Description (and/or right of way map)
Acquisition Process Pamphlet

CC: Records Management

Received by: Cert Mail

Certified Mail Number:

Date: _____

UNITED STATES POSTAL SERVICE

January 7, 2020

notice to owner you sent on 12/16/19 for FM# 4358593 P. 101. 803

Dear Michelle Wilson:

The following is in response to your request for proof of delivery on your item with the tracking number: **9171 9690 0935 0234 7854 11**.

Item Details

Status:	Delivered, Left with Individual
Status Date / Time:	December 18, 2019, 11:38 am
Location:	BUSHNELL, FL 33513
Postal Product:	First-Class Mail®
Extra Services:	Certified Mail™
	Return Receipt Electronic

Recipient Signature

Signature of Recipient:	V. Fowler W. Fowler
Address of Recipient:	215 E McCollum

Note: Scanned image may reflect a different destination address due to Intended Recipient's delivery instructions on file.

Thank you for selecting the United States Postal Service® for your mailing needs. If you require additional assistance, please contact your local Post Office™ or a Postal representative at 1-800-222-1811.

Sincerely,
United States Postal Service®
475 L'Enfant Plaza SW
Washington, D.C. 20260-0004

SUMTER COUNTY BOARD OF COUNTY COMMISSIONERS
EXECUTIVE SUMMARY

SUBJECT: **Approval of the Perpetual Easement for Parcel 803 to the Florida Department of Transportation (FDOT) for the SR 50 Widening Project (FDOT Project No. 435859-3)**

REQUESTED ACTION: **Staff Recommends Approval**

Meeting Type: Regular Meeting **DATE OF MEETING:** **5/12/2020**

CONTRACT: ☐ N/A Vendor/Entity: FDOT
Effective Date: Termination Date: N/A
Managing Division / Dept: **Engineering**

BUDGET IMPACT: N/A
FUNDING SOURCE: **N/A**
Type: N/A **EXPENDITURE ACCOUNT:** **N/A**

HISTORY/FACTS/ISSUES:

The State of Florida Department of Transportation (FDOT) proposes to construct State Road No. 50, Section No. 18030, Financial Project No. 435859-3, in Sumter County, Florida, within the limits of the Hernando/Sumter County Line/US 301 to East of CR 478A.

CR 757 will be realigned to intersect SR 50 at ninety-degrees as part of the SR 50 widening project. ROW and easements are required to achieve this realignment. Parcel 803 is the pavement and ROW of CR 757, consisting of approximately 0.973 acres, more or less. FDOT requires a perpetual easement on this parcel for flood plain compensation for the SR 50 project.

Awarding this perpetual easement on Parcel 803 is for transportation purposes which are in the public and community interest and for the public welfare; and FDOT has made application to Sumter County to execute and deliver to the FDOT a Perpetual Easement, in favor of the State of Florida, and said request having been duly considered.

Attached is the Easement and Resolution for execution by the Board that was prepared by FDOT and reviewed and approved for execution by the County Attorney.

Staff recommends approval.

Prepared by: **Deborah L. Snyder** **Grammarly Check** ☒

07-PEFioodPiain-03/15
December 4, 2019
This instrument prepared by
Marika Tremblay
Under the direction of
FREDRICK W. LOOSE, ATTORNEY
Department of Transportation
719 South Woodland Boulevard
Deland, Florida 32720-6834

PARCEL NO. 803.1
SECTION 18030
F.P. NO. 435859 3
STATE ROAD 50
COUNTY SUMTER

PERPETUAL EASEMENT FOR FLOOD PLAIN COMPENSATION

KNOW ALL MEN BY THESE PRESENTS that SUMTER COUNTY, a political subdivision of the State of Florida, as Grantor(s), for and in consideration of One Dollar and other valuable considerations to it in hand paid, receipt whereof is acknowledged, does hereby grant and convey unto the STATE OF FLORIDA, for use and benefit of the STATE OF FLORIDA, DEPARTMENT OF TRANSPORTATION, as Grantee, and its assigns, a perpetual and exclusive easement for the limited purpose of constructing and performing necessary maintenance of a flood plain compensation pond within this easement with the construction proposed under the above-referenced project over, upon, under and across the following described lands situate in Sumter County, Florida, to-wit:

PARCEL 803 **SECTION 18030**
F.P.C. EASEMENT **F.P. NO. 435859-3**

PART A

THAT PART OF:

That part of County road 757 lying in the Southeast 1/4 of the Southeast 1/4 of Section 22 and the Southwest 1/4 of the Southwest 1/4 of Section 23, Township 22 South, Range 22 East, Sumter County, Florida.

DESCRIBED AS FOLLOWS:

Commence at a nail and disk stamping illegible, marking the Northeast corner of the Southeast 1/4 of Section 22, Township 22 South, Range 22 East, Sumter County, Florida, as shown on the Florida Department of Transportation Right of Way Map for State Road 50, Section 18030, Financial Project Number 435859-3; thence South 00°06'45" East, along the East line of the

Southeast 1/4 of said Section 22, a distance of 2291.47 feet to the POINT OF BEGINNING; thence departing said East line, run North 3r43'25" East, a distance of 25.07 feet to the intersection with the existing Easterly Right of Way Line of County Road 757 as shown on said map; thence run the following two courses along said Easterly Right of Way Line; run South 00°01'56" West, a distance of 72.21 feet to a point of curvature of a curve concave Easterly and having a radius of 1417.39 feet; thence run Southerly 162.81 feet along the arc of said curve, through a central angle of 06°34'52" to a point on a non-tangent curve, concave Southwesterly, having a radius of 345.00 feet; thence departing said Easterly Right of Way Line, from a tangent bearing of North 33°38'26" West, run Northwesterly 55.66 feet along the arc of said curve, through a central angle of ag0 14'37" to the intersection with the Westerly Right of Way Line of said County Road 757 and a point on a non-tangent curve, concave Easterly and having a radius of 1447.39 feet; thence run the following two courses along said Westerly Right of Way Line; from a tangent bearing of North 04°40'34" West, run Northerly 118.95 feet along the arc of said curve, through a central angle of 04°42'31" to a point of tangency; thence North 00°01'56" East, a distance of 33.38 feet; thence departing said Westerly Right of Way Line, run North 37°43'25" East, a distance of 24.00 feet to the POINT OF BEGINNING.

CONTAINING 5,763 square feet, more or less.

PART B

THAT PART OF:

That part of County road 755 lying in the Southeast 1/4 of the Southeast 1/4 of Section 22 and the Southwest 1/4 of the Southwest 1/4 of Section 23, Township 22 South, Range 22 East, Sumter County, Florida.

DESCRIBED AS FOLLOWS:

Commence at a nail and disk stamping illegible, marking the Northeast corner of the Southeast 1/4 of Section 22, Township 22 South, Range 22 East, Sumter County, Florida, as shown on the Florida Department of Transportation Right of Way Map for State Road 50, Section 18030, Financial Project Number 435859-3; thence South 00°06'45" East, along the East line of the Southeast 1/4 of said Section 22, a distance of 1717.78 feet to the POINT OF BEGINNING; thence departing said East line, run North 89°53'15" East, a distance of 20.65 feet to the intersection with the existing East Right of Way Line of County Road 755 as shown on said map; thence South 00°29'24" West along said East Right of Way Line, a distance of 220.50 feet; thence departing said East Right of Way Line, run South 82°20'57" West, a distance of 51.77 feet to the intersection with the West Right of Way Line of said County Road 755; thence North 00°06'45" West along said West Right of Way Line, a distance of 227.28 feet; thence departing said West Right of Way Line, run North 89°53'15" East, a distance of 33.00 feet to the POINT OF BEGINNING.

CONTAINING 11,747 square feet, more or less.

AND

PART C

THAT PART OF:

That part of County Road 478A lying in the Northwest 1/4 of the Southwest 1/4 of Section 23, Township 22 South, Range 22 East, Sumter County, Florida.

DESCRIBED AS FOLLOWS:

Commence at a nail and disk stamping illegible, marking the Northwest corner of the Southwest 1/4 of Section 23, Township 22 South, Range 22 East, Sumter County, Florida, as shown on the Florida Department of Transportation Right of Way Map for State Road 50, Section 18030, Financial Project Number 435859-3; thence South 00°06'45" East, along the West line of the Southwest 1/4 of said Section 23, a distance of 1333.30 feet to the Northwest corner of the Southwest 1/4 of the Southwest 1/4 of said Section 23; thence departing said West line, run South 89°16'05" East along the South line of the Northwest corner of the Southwest 1/4 of said Section 23, a distance of 449.73 feet to a point on a non-tangent curve, concave Westerly, having a radius of 60.00 feet; thence departing said South line, from a tangent bearing of North 03°03'32" East, run Northerly 1.13 feet along the arc of said curve, through a central angle of 01°04'34" to a point of tangency; thence North 01°58'58" East, a distance of 23.36 feet to the intersection with the existing South Right of Way Line of County Road 478A as shown on said map and the POINT OF BEGINNING; thence continue North 01°58'58" East, a distance of 40.00 feet to the intersection with the existing North Right of Way Line of said County Road 478A; thence South 88°01'02" East along said North Right of Way Line, a distance of 687.72 feet to a point on a non-tangent curve, concave Southeasterly, having a radius of 2391.83 feet; thence departing said North Right of Way Line, from a tangent bearing of South 76°12'37" West, run Southwesterly 133.95 feet along the arc of said curve, through a central angle of 03°12'32" to the intersection with the existing South Right of Way Line of said County Road 478A; thence North 88°01'02" West along said South Right of Way Line, a distance of 559.91 feet to the POINT OF BEGINNING.

CONTAINING 0.571 acres, more or less.

PARTS A, BAND C CONTAINING IN THE AGGREGATE 0.973 acres, more or less.

PARCEL NO. 803.1
SECTION 18030
F.P. NO. 435859 3
PAGE 4

This legal description prepared under the direction of:
H. Paul deVivero, P.L.S. No. 4990
Geodata Consultants, Inc.
1349 S. International Parkway, Suite 2401
Lake Mary, Florida 32746

TO HAVE AND TO HOLD the same unto said Grantee and its assigns, together with immunity unto the said Grantee from all claims for damage to Grantor's contiguous lands, if any, arising from or growing out of such construction and/or maintenance.

Grantor will defend the title to said lands against all persons claiming by, through or under said Grantor.

IN WITNESS WHEREOF, the said grantor has caused these presents to be executed in its name by its Board of County Commissioners acting by the Chairperson (or Vice-Chairperson) of said Board, the day and year aforesaid.

ATTEST _____
CLERK & AUDITOR

By: _____
Deputy Clerk

BOARD OF COUNTY COMMISSIONERS
SUMTER COUNTY, FLORIDA

By: _____

Print: _____
Chairman

07-PE12-09/01
December 4, 2019
This instrument prepared by
Marika Tremblay
Under the direction of
FREDRICK W. LOOSE, ATTORNEY
Department of Transportation
719 South Woodland Boulevard
Deland, Florida 32720-6834

PARCEL NO. 803.1
SECTION 18030
F.P. NO. 435859 3
STATE ROAD 50
COUNTY SUMTER

RESOLUTION

ON MOTION of Commissioner _____, seconded by Commissioner _____, the following Resolution was adopted:

WHEREAS, the State of Florida Department of Transportation proposes to construct or improve State Road No. 50, Section No. 18030, F.P. No. 435859-3, in Sumter County, Florida: and

WHEREAS, it is necessary that an easement across certain lands now owned by Sumter County be acquired by the State of Florida Department of Transportation: and

WHEREAS, said use is in the best interest of the County: and

WHEREAS, the State of Florida Department of Transportation has made application to said County to execute and deliver to the State of Florida Department of Transportation a perpetual easement, or easements, in favor of the State of Florida Department of Transportation for the purpose of constructing, operating, and maintaining outfall and drainage ditches and drains, and said request having been duly considered.

NOW THEREFORE, BE IT RESOLVED by the Board of County Commissioners of Sumter County, that the application of the State of Florida Department of Transportation for a perpetual easement, or easements, is for transportation purposes which are in the public or community interest and for public welfare; that a perpetual easement, or easements, in favor of the State of Florida Department of Transportation in Sumter County, should be drawn and executed by the Chairman on behalf of this Board of County Commissioners.

PARCEL NO. 803.1
SECTION 18030
F.P. NO. 435859 3
PAGE 2

BE IT FURTHER RESOLVED that a certified copy of this Resolution be forwarded forthwith to the State of Florida Department of Transportation at 719 South Woodland Blvd., Deland, Florida, 32720-6834.

DONE AND RESOLVED this _____day of _____, 2020, at _____,

Sumter County, Florida. Time adopted: _____ p.m.

ATTEST: _____
CLERK & AUDITOR

BOARD OF COUNTY COMMISSIONERS
SUMTER COUNTY, FLORIDA

By: _____
Deputy Clerk

By: _____

Print: _____
Chairman

Florida Department of Transportation

RON DESANTIS
GOVERNOR

719 S. Woodland Boulevard
DeLand, Florida 32720-6834

KEVIN J. THIBAULT, P.E.
SECRETARY

NOTICE TO OWNER

Date: 12/16/19

ITEM/SEGMENT #:	4358593
MANAGING DISTRICT:	05
F.A.P. #:	
STATE ROAD #:	SR 50
COUNTY:	Sumter
PARCEL #:	803

Sumter County
209 N. Florida St.
Bushnell, FL 33513

Dear Property Owner,

The Florida Department of Transportation is planning the following improvement of the above referenced transportation facility:

Widening of SR 50

Our research shows you own property needed for this project. This letter, along with the enclosed pamphlet entitled **Acquisition Process**, explains your rights and options and the process we must follow by law in acquiring your property. The following enclosed documents identify the property that is needed:

Legal Description and/or Right of Way Map

If you no longer own this property, please refer to the enclosed questionnaire.

We recognize that a proposed transportation project, particularly one which requires the acquisition of private property, will usually result in many questions and concerns. Please be assured you will have sufficient time to have your questions answered, to consider and understand your rights, options and responsibilities, and make all necessary arrangements. Throughout this process, we will do our best to ensure your questions are answered, that you are treated fairly and receive all of the rights you are guaranteed by law, and that you receive a fair price for your property.

Under Federal and State law, you are entitled to certain rights and protections when the State must acquire real estate from you. The following is a summary of your rights:

- You may accompany the Department's appraiser when your property is inspected as part of the process for valuing your property.
- You may obtain copies of the Department's appraisal, right of way maps and construction plans.
- We will make a written offer to you to purchase your property and will negotiate with you, in good faith, to reach a mutually acceptable purchase price.
- If we cannot agree on a purchase price, we will not file a condemnation lawsuit until at least 30 days after you receive our initial written offer.
- You will receive no less than full compensation for the property acquired. Full compensation includes, the value of the real estate acquired together with damages, if any, to your remaining property.
- You may be eligible for relocation assistance benefits if you are required to move or move personal possessions from the property we acquire.
- You may receive reimbursement for reasonable attorney fees and other reasonable costs you incur for appraisal and other services associated with the Department's acquisition.

Your rights and options are more fully explained in the enclosed pamphlet entitled **Acquisition Process**. We encourage you to read this pamphlet carefully and contact us if you have any questions.

You may be contacted by attorneys, appraisers or others requesting a commitment from you to use their services in dealing with the Department. As previously mentioned, the Department will pay for certain types of services. However, by law, there are limitations placed on what the Department can pay. We encourage you to contact us and allow us to fully explain our reimbursement process.

Over the coming months, you will be contacted by various Department representatives who will schedule property inspections, assess your relocation needs, and negotiate with you for the purchase of your property. If you have questions about any aspect of our acquisition process or if you have information that would help us to determine a fair value for your property or help us provide service to you, please let them know. Regardless of whether or not we reach an agreement on the purchase of your property, we will do our best to be sensitive and responsive to your needs.

I encourage you to fill out and return the enclosed questionnaire in the postage-paid envelope provided. This information will help us begin working with you to reach a mutually acceptable settlement for your property. If you experience any problems, please do not hesitate to contact:

Diane C. Taylor, Right of Way Agent
719 South Woodland Blvd, MS 551
DeLand, FL 32720-6834
(386) 943-5032

Sincerely,

C. Jack Adkins
District Right of Way Manager
By: Diane C. Taylor

Enclosures:

Questionnaire
Return Envelope
Legal Description (and/or right of way map)
Acquisition Process Pamphlet

CC: Records Management

Received by: Certmail

Certified Mail Number:

Date: _____

SUMTER COUNTY BOARD OF COUNTY COMMISSIONERS
EXECUTIVE SUMMARY

SUBJECT: **Local Agency Program Supplemental Agreement between State of Florida Department of Transportation (FDOT) and Sumter County Board of County Commissioners for the Construction and Construction Engineering Inspection (CEI) Services for Safety Improvements along C-478 From US 301 to the City of Center Hill Southern Limit (Staff Recommends Approval).**

REQUESTED ACTION: **Staff Recommends Approval**

Meeting Type: **Regular Meeting** **DATE OF MEETING:** **5/12/2020**

CONTRACT: ☐ N/A Vendor/Entity: **FDOT**
Effective Date: **5/12/2020** Termination Date: **2/28/2021**
Managing Division / Dept: **Engineering**

BUDGET IMPACT: **$1,013,164.00 ($863,683.00 Construction + $149,481.00 CEI)**
FUNDING SOURCE: **Secondary Trust Fund**
Type: Capital **EXPENDITURE ACCOUNT:** **106-340-541-6346**

HISTORY/FACTS/ISSUES:

This FDOT Local Agency Program (LAP) Supplemental Agreement will assist the County in the construction and construction engineering inspection (CEI) services for Safety Improvements along C-478 From US 301 to the City of Center Hill southern limit, FPN 439912-1-58/68-01. The maximum amount reimbursed by federal funds for the project has been increased to $1,013,164.00 ($863,683.00 Construction + $149,481.00 CEI)

This project involves multiple roadway safety improvements on County Road 478 from US 301 (MP 0.00) to the City of Center Hill southern limit (MP 10.35) with a total approximate milling and resurfacing length of 0.99 miles. Improvements will primarily be associated with curve 2 (MP 1.65), curve 7 (MP 8.2), curve 8 (MP 8.5), and curve 9 (MP 8.8). Improvements include milling and resurfacing, cross-slope correction to establish proper superelevation, 5-foot paved shoulders (8-foot total shoulder) throughout curves and adjacent tangent extents, constructing driveway aprons, regrading soil adjacent to the roadway to negate drop off hazards, guardrail removal, thermoplastic striping, installing centerline and edge line profiled thermoplastic markings, and signing (including new intersection warning, grade crossing advance warning, double-sided chevron alignment, and curve/speed advisory signs). Drainage improvements will be limited to regrading roadside swales.

Prepared by: **Steven Cohoon** **Grammarly Check** ☒

LOCAL AGENCY PROGRAM
SUPPLEMENTAL AGREEMENT

SUPPLEMENTAL NO.
1

FEDERAL ID NO. (FAIN)
D519 036 B

CONTRACT NO.
G1J17

FEDERAL AWARD DATE
1/29/2020

FPN
439912-1-58/68-01

RECIPIENT DUNS NO.
06-967-3853

Recipient, Sumter County and the Florida Department of Transportation (Department), desires to supplement the original Agreement entered into and executed on February 12, 2020 as identified above. All provisions in the original Agreement and supplements, if any, remain in effect except as expressly modified by this supplement.

The changes to the Agreement and supplements, if any, are described as follows:

PROJECT DESCRIPTION

Name Safety Improvements on County Road 478 Length 10.35 miles

Termini From US 301 (MP 0.00) to the City of Center Hill Southern Limit (MP 10.35)

Description of Work:

This project involves multiple roadway safety improvements on County Road 478 from US 301 (MP 0.00) to the City of Center Hill southern limit (MP 10.35) with a total approximate milling and resurfacing length of 0.99 miles. Improvements will primarily be associated with curve 2 (MP 1.65), curve 7 (MP 8.2), curve 8 (MP 8.5), and curve 9 (MP 8.8).

Improvements include milling and resurfacing, cross-slope correction to establish proper superelevation, 5-foot paved shoulders (8-foot total shoulder) throughout curves and adjacent tangent extents, constructing driveway aprons, regrading soil adjacent to roadway to negate drop off hazards, guardrail removal, thermoplastic striping, installing centerline and edgeline profiled thermoplastic markings, and signing (including new intersection warning, grade crossing advance warning, double sided chevron alignment, and curve/speed advisory signs). Drainage improvements will be limited to regrading roadside swales.

The Recipient (Sumter County) shall construct the project within the limits of the existing right-of-ways, County-owned properties, or easements.

Reason for Supplement and supporting engineering and/or cost analysis:

1. Pursuant to **Paragraph 4.0 Project Cost** of the Local Agency Program Agreement, the Recipient and the Department acknowledge and agree that the Schedule of Financial Assistance for Construction that includes the authorized and encumbered Federal funding and Local funding contribution for the project shall be **reduced** to an amount equal to the Recipient's contract award amount of **$785,166.00**.

   In addition to the Recipient's eligible contract award amount, the amount of **$78,517.00** in Federal Aid authorized funds on the Construction phase remains encumbered for potential participation in reimbursement of eligible additional costs directly associated with construction contract modifications. The Department and FHWA solely reserve the right to determine the extent of Federal Aid participation of all additional costs submitted by the Recipient for reimbursement. The Recipient acknowledges: (1) Full responsibility for payment of all additional costs directly

associated with construction contract modifications in advance; and, (2) that the Department and FHWA are under no obligation to participate in said additional costs if they determine that said costs are not associated with eligible construction contract modifications. The Recipient further agrees that the total funding, as may be supplemented in accordance with the terms and limitations of this paragraph, will constitute the maximum limiting amount eligible for reimbursement and no additional funding will be available for this project.

All change orders added to the Recipient's contract will require review and approval by the Department. If a Recipient authorizes or performs a change of work prior to receiving concurrence from the District LAP Administrator (or delegate) the change will not be eligible for reimbursement.

An amount of **$69,448.00** in Local funds is being removed from the Construction phase of the project. An amount of **$37,569.00** in federal funds is being unencumbered from the Construction phase of the project, and a total of **$863,683.00** in authorized and encumbered federal funding remains on the Construction phase of the project.

Additionally, the authorized and encumbered Federal funding for Construction Engineering and Inspection (CEI) shall be **increased** by **$59,356.00**, with an equal amount of Local funds being removed. The total federal funding for CEI is now equal to the Recipient's contract award amount of **$149,481.00**

The total federal funding is to be increased by **$21,787.00**, which is the difference between previous federal funding of **$991,377.00** and the current federal funding of **$1,013,164.00**.

2. Revisions to the federal and local funding attributed to the amounts referenced above are reflected in the Adjusted Exhibit "B" Schedule of Financial Assistance, and in Exhibit "E," Federal Financial Assistance (Single Audit Act), attached hereto and incorporated herein.

3. The Recipient Resolution authorizing entry into this Supplemental Agreement is attached and incorporated into this Supplemental Agreement as Exhibit "D".

The remainder of this page intentionally left blank.

STATE OF FLORIDA DEPARTMENT OF TRANSPORTATION

LOCAL AGENCY PROGRAM
SUPPLEMENTAL AGREEMENT
ADJUSTED EXHIBIT "B" SCHEDULE OF FINANCIAL ASSISTANCE

525-010-32
PROGRAM
MANAGEMENT
08/19

RECIPIENT NAME & BILLING ADDRESS: Sumter County
7375 Powell Road
Wildwood, Florida 34785

FINANCIAL PROJECT NUMBER: 439912-1-58/68-01

PHASE OF WORK By Fiscal Year	FUNDING					
	(1) PREVIOUS TOTAL PROJECT FUNDS	(2) ADDITIONAL PROJECT FUNDS	(3) CURRENT TOTAL PROJECT FUNDS	(4) TOTAL LOCAL FUNDS	(5) TOTAL STATE FUNDS	(6) TOTAL FEDERAL FUNDS
Design						
FY: (Insert Program Name)						
FY: (Insert Program Name)						
FY: (Insert Program Name)						
Total Design Cost	$ 0.00	$ 0.00	$ 0.00	$ 0.00	$ 0.00	$ 0.00
Right-of-Way						
FY: (Insert Program Name)						
FY: (Insert Program Name)						
FY: (Insert Program Name)						
Total Right-of-Way Cost	$ 0.00	$ 0.00	$ 0.00	$ 0.00	$ 0.00	$ 0.00
Construction						
FY: 2019 - 2020 (LAP)	$901,252.00	($37,569.00)	$863,683.00	$0.00	$0.00	$863,683.00
FY: 2019 - 2020 (LAP)	$69,448.00	($69,448.00)	0.00	$0.00	$0.00	$0.00
FY: (Insert Program Name)						
Total Construction Cost	$970,700.00	($107,017.00)	$863,683.00	$ 0.00	$ 0.00	$863,683.00
Construction Engineering and Inspection (CEI)						
FY: 2019 - 2020 (LAP)	$90,125.00	$59,356.00	$149,481.00	$0.00	$0.00	$149,481.00
FY: 2019 - 2020 (LAP)	$59,356.00	($59,356.00)	$0.00	$0.00	$0.00	$0.00
FY: (Insert Program Name)						
Total CEI Cost	$149,481.00	$ 0.00	$149,481.00	$ 0.00	$ 0.00	$149,481.00
(Insert Phase)						
FY: (Insert Program Name)						
FY: (Insert Program Name)						
FY: (Insert Program Name)						
Total Phase Costs	$ 0.00	$ 0.00	$ 0.00	$ 0.00	$ 0.00	$ 0.00
TOTAL COST OF THE PROJECT	$1,120,181.00	($107,017.00)	$1,013,164.00	$ 0.00	$ 0.00	$1,013,164.00

COST ANALYSIS CERTIFICATION AS REQUIRED BY SECTION 216.3475, FLORIDA STATUTES:
I certify that the cost for each line item budget category has been evaluated and determined to be allowable, reasonable, and necessary as required by Section 216.3475, F.S. Documentation is on file evidencing the methodology used and the conclusions reached.

District Grant Manager Name

Signature Date

IN WITNESS WHEREOF, the parties have executed this Agreement on the date last ascribed herein.

RECIPIENT SUMTER COUNTY

By: "See Attached Signature Page"
Name:
Title:

STATE OF FLORIDA
DEPARTMENT OF TRANSPORTATION

By:_____
Name: Loreen C. Bobo, P.E.
Title: Director of Transportation Development

Date:_____

Legal Review:

_____

LOCAL AGENCY PROGRAM SUPPLEMENTAL AGREEMENT SIGNATURE PAGE (FPN 439912-1-58-01 AND FPN 439912-1-68-01)

IN WITNESS WHEREOF, the parties have executed this Agreement on the day and year written above.

RECIPIENT SUMTER COUNTY

By: _____
Name: Steve Printz
Title: Chairman

By: _____
Name: Bradley Arnold
Title: County Administrator

EXHIBIT "D"

RECIPIENT RESOLUTION

The Recipient's Resolution authorizing entry into this Agreement is attached and incorporated into this Agreement.

RESOLUTION NO 2020-____

A RESOLUTION OF THE BOARD OF COUNTY COMMISSIONERS OF SUMTER COUNTY, FLORIDA, APPROVING THE LOCAL AGENCY PROGRAM SUPPLEMENTAL AGREEMENT BETWEEN THE STATE OF FLORIDA DEPARTMENT OF TRANSPORTATION AND SUMTER COUNTY BOARD OF COUNTY COMMISSIONERS FOR THE C-478 SAFETY IMPROVEMENTS FROM US 301 TO THE CITY OF CENTER HILL SOUTHER LIMIT PROJECT, FPN 439912-1-58-01 AND FPN 439912-1-68-01; AUTHORIZING THE COUNTY ADMINISTRATOR TO EXECUTE SAID AGREEMENT.

WHEREAS, the State of Florida Department of Transportation and Sumter County desire to Amend the C-478 Safety Improvements from US 301 to the City of Center Hill Southern Limit Project, FPN 439912-1-58-01 and FPN 439912-1-68-01 and,

WHEREAS, the State of Florida Department of Transportation has requested Sumter County to execute and deliver to the State of Florida Department of Transportation the Local Agency Program Supplemental Agreement for the aforementioned project, FPN 439912-1-58-01 and FPN 439912-1-68-01 and,

NOW, THEREFORE, BE IT RESOLVED by the Board of Sumter Commissioners that the County Administrator is hereby authorized to make, execute, and deliver to the State of Florida Department of Transportation the Local Agency Program Supplemental Agreement for the aforementioned project, FPN 439912-1-58-01 and FPN 439912-1-68-01.

PASSED AND ADOPTED BY THE BOARD OF COUNTY COMMISSIONERS OF SUMTER COUNTY, this 12th day of May 2020.

ATTEST:

_____ _____

Caroline Alrestimawi, Deputy Clerk Steve Printz, Chairman

_____

Bradley Arnold, County Administrator

EXHIBIT "E"

FEDERAL FINANCIAL ASSISTANCE (SINGLE AUDIT ACT)

FEDERAL RESOURCES AWARDED PURSUANT TO THIS AGREEMENT ARE AS FOLLOWS:

CFDA No.:	20.205
CFDA Title:	Highway Planning and Construction Federal-Aid Highway Program, Federal Lands Highway Program
CFDA Program Site:	**https://www.cfda.gov/**
Award Amount:	**$1,013,164.00**
Awarding Agency:	Florida Department of Transportation
Award is for R&D:	No
Indirect Cost Rate:	N/A

FEDERAL RESOURCES AWARDED PURSUANT TO THIS AGREEMENT ARE SUBJECT TO THE FOLLOWING:

2 CFR Part 200 – Uniform Administrative Requirements, Cost Principles & Audit Requirements for Federal Awards
http://www.ecfr.gov/

FEDERAL RESOURCES AWARDED PURSUANT TO THIS AGREEMENT MAY ALSO BE SUBJECT TO THE FOLLOWING:

Title 23 – Highways, United States Code
http://uscode.house.gov/browse/prelim@title23&edition=prelim

Title 49 – Transportation, United States Code
http://uscode.house.gov/browse/prelim@title49&edition=prelim

Map-21 – Moving Ahead for Progress in the 21st Century, Public Law 112-141
http://www.gpo.gov/fdsys/pkg/PLAW-112publ141/pdf/PLAW-112publ141.pdf

Federal Highway Administration – Florida Division
http://www.fhwa.dot.gov/fldiv/

Federal Funding Accountability and Transparency Act (FFATA) Sub-award Reporting System (FSRS)
https://www.fsrs.gov/

SUMTER COUNTY BOARD OF COUNTY COMMISSIONERS
EXECUTIVE SUMMARY

SUBJECT: **Renewal of Contract with Vector Disease Control International, LLC aka Mosquito Control Services of Florida, LLC for Sumter County Mosquito Control Services**

REQUESTED ACTION: **Staff Recommends Approval**

Meeting Type: Regular Meeting **DATE OF MEETING:** **5/12/2020**

CONTRACT: ☐ N/A Vendor/Entity: Vector Disease Control International, LLC aka Mosquito Control Services of Florida, LLC

Effective Date: 8/13/2019 Termination Date: 3/31/2021

Managing Division / Dept: **Mosquito Control**

BUDGET IMPACT: Varies depending on services used during fiscal year.

FUNDING SOURCE: **General Fund**

Type: Annual **EXPENDITURE ACCOUNT:** **001-195-562-3100**

HISTORY/FACTS/ISSUES:

On August 13, 2019, the BOCC approved a piggyback on the Clay County RFP #17/18-2 for a contracted mosquito control program. The original agreement expired on March 31, 2020 with a one-year renewal remaining. At this time, Sumter County wishes to extend the current agreement for one year.

All terms and conditions of the original contract shall remain in effect for the renewal period. Sumter County received confirmation that Clay County extended this agreement with the vendor and a copy of the renewal is attached.

There are no renewals remaining on this agreement.

Prepared by: **Becky Segrest** **Grammarly Check** ☒

Extension Agreement #1
Sumter County Mosquito Control Services Agreement

This agreement extension is made and entered into this 12th day of May 2020, between the Board of County Commissioners of Sumter County Florida, 7375 Powell Road, Wildwood, Florida 34785 (County) and Vector Disease Control International, LLC aka Mosquito Control Services of Florida, LLC (Contractor) 1320 Brookwood Drive, Suite H, Little Rock, AR 72202.

WHEREAS, the parties executed an original agreement dated August 13, 2019 based on the Contractor's response to Clay County RFP #17/18-2 in which Sumter County piggybacked on;

WHEREAS, Clay County extended their agreement with Vector Disease Control International, LLC aka Mosquito Control Services of Florida, LLC through March 31, 2021 and the County wishes to extend our agreement through the piggyback under the same terms and conditions through March 31, 2021.

NOW, THEREFORE, the parties agree as follows:

1. That the certain agreement between the parties originally dated August 13, 2019, is hereby extended to March 31, 2021.
2. Contractor shall, at all times, comply with the Florida Public Records Law, the Florida Open Meeting Law and all other applicable laws, rules and regulations of the State of Florida.
3. **IF THE CONTRACTOR HAS QUESTIONS REGARDING THE APPLICATION OF CHAPTER 119, FLORIDA STATUTES, TO THE FIRMS' DUTY TO PROVIDE PUBLIC RECORDS RELATING TO THIS AGREEMENT, CONTACT THE CUSTODIAN OF PUBLIC RECORDS AT 352-689-4400, Sumter County Board of County Commissioners, 7375 Powell Road, Wildwood, Florida 34785 or via email at Records@sumtercountyfl.gov.**
4. Except as expressly modified by this Extension Agreement, all other terms and conditions of the original Agreement remain in full force and effect for the term of the Agreement.

THIS AGREEMENT is executed the day and year first written above.

BOARD OF COUNTY COMMISSIONERS,
SUMTER COUNTY, FLORIDA

Attest: Deputy Clerk

Date Signed: _____

By: _____
Chairman

Date Signed: _____

VECTOR DISEASE CONTROL INTERNATIONAL, LLC AKA MOSQUITO CONTROL SERVICES OF FLORIDA, LLC.

By: _____

Witness:
Date Signed: _____

Date Signed: _____

SECOND RENEWAL TO
CLAY COUNTY AGREEMENT/CONTRACT NO. 2017/2018-68
MOSQUITO CONTROL PROGRAM

THIS SECOND RENEWAL TO AGREEMENT/CONTRACT NO. 2017/2018-68 is entered into as of this 25th day of March, 2020, by and between **Clay County**, a political subdivision of the State of Florida (the "COUNTY"), by and through its Board of County Commissioners (the "Board"), and **Mosquito Control Services Of Florida, LLC** (the "CONTRACTOR"), whose address is 1000 Labarre Road, Metairie, LA 70001.

WHEREAS, the parties have previously entered into Clay County Agreement/Contract No. 17/18-68, dated March 13, 2018, whereby the CONTRACTOR agreed to provide a mosquito control program for Clay County (the "Agreement"); and

WHEREAS, parties entered into that certain First Renewal of the Agreement dated March 12, 2019, extending the Agreement through March 31, 2020 (the "First Renewal"), a copy of the First Renewal, inclusive of the Agreement, is incorporated herein and attached as Exhibit A; and

WHEREAS, the Agreement provided for an initial term of 12 months with the option to renew the Agreement for two additional one-year periods; and

WHEREAS, the COUNTY and the CONTRACTOR desire to exercise the option to renew the terms of the Agreement for the second one-year period (the "Second Renewal").

WITNESSETH

NOW THEREFORE, for and in consideration of the mutual promises and covenants hereinafter set forth and for other good and valuable consideration, the receipt, adequacy, and sufficiency of which is hereby acknowledged, the parties agree as follows:

1. The Agreement is renewed for an additional one-year period commencing on April 1, 2020 through March 31, 2021.

2. The CONTRACTOR certifies that the Scrutinized Companies Certification that was executed and attached to First Renewal is still valid and in compliance with Section 287.135(5), Florida Statutes.

3. In all other respects, the original terms and conditions of the Agreement remain in full force and effect.

IN WITNESS WHEREOF, the parties have set their hands and seals the day and year first written above.

Mosquito Control Services of Florida, LLC
1000 Labarre Road
Metairie, LA 70001

By: _____
Print: Steven G. Pavlovich
Its: General Manager / CEO

Clay County, a political subdivision of the State of Florida, by and through its Board of County Commissioners

By: _____
"For" Gayward F. Hendry, Chairman

ATTEST FOR CLAY COUNTY:

_____
Howard Wanamaker, County Manager and Clerk of the Board of County Commissioners

F:\Contract\Extension Services\Mosquito Control Second Renewal 03092020.docx

Exhibit A

FIRST RENEWAL TO
AGREEMENT/CONTRACT #17/18-68
MOSQUITO CONTROL PROGRAM

THIS FIRST RENEWAL TO AGREEMENT #17/18-68 is entered into as of this 12th day of March, 2019, by and between Clay County (the COUNTY), whose address is 477 Houston Street, Green Cove Springs, FL 32043-1366, and Mosquito Control Services of Florida, LLC (the CONTRACTOR), whose address is 1000 Labarre Road, Metairie, LA 70001.

WHEREAS, the parties have previously entered into Agreement #17/18-68, dated March 13, 2018 (the "AGREEMENT"), a copy of which is incorporated herein and attached as Exhibit A, whereby the CONTRACTOR agreed to provide mosquito control services for the COUNTY; and

WHEREAS, AGREEMENT #17/18-68 provided for an initial term of 12 months, commencing upon execution of the AGREEMENT and ending March 29, 2019, with the option to renew for two (2) one (1) year periods; and

WHEREAS, the COUNTY and the CONTRACTOR desire to exercise the option to renew the terms of the AGREEMENT for another year.

WITNESSETH

IN CONSIDERATION of the foregoing RECITALS, the parties agree as follows:

1. The term of the AGREEMENT is agreed to be from April 1, 2019 through March 31, 2020.

2. The Standard Addendum to All Contracts and Agreements and the Scrutinized Companies Certification are both attached hereto as Exhibit B & C respectively and made a part hereof.

3. In all other respects, the terms and conditions of the AGREEMENT remain in full force and effect.

IN WITNESS WHEREOF, the parties have set their hands and seals the day and year first written above.

Mosquito Control Services of Florida, LLC
1000 Lebarre Road
Metairie, LA 70001

By: Steven G. Parbak
CEO / General Manager
(PRINT NAME)

CLAY COUNTY, a political subdivision of the State of Florida, by and through its Board of County Commissioners

By: Mike Cella
Mike Cella, Chairman

State of Louisiana, Parish of Jefferson
Sworn to and subscribed before me,
this 9th day of April, 2019
Katherine Buchler
Notary Public

KATHERINE BUCHLER
NOTARY PUBLIC
COMMISSIONED FOR LIFE
NOTARY ID NO. 144951
JEFFERSON PARISH, LA

ATTEST FOR CLAY COUNTY:

Lorin L. Mock

Lorin L. Mock, Acting County Manager and Clerk of the Board of County Commissioners

Exhibit A

Clay County Agreement/Contract No. 2017/2018-68
Mosquito Control Program

This Agreement is entered into this 13th day of March, 2018, between Clay County, a political subdivision of the State of Florida (the "COUNTY"), by and through its Board of County Commissioners (the "Board"), and Mosquito Control Services of Florida, LLC (the "CONTRACTOR"), whose address is 1000 Labarre Road, Metairie, LA 70001.

WHEREAS, controlling disease vector and nuisance mosquitos is in the best interest of public health and can influence the quality of life for county residents; and

WHEREAS, the COUNTY desires a comprehensive program of mosquito abatement through an integrated pest management approach; and

WHEREAS, the Board issued RFP #17/18-2 to obtain competitive proposals from qualified contractors who are interested in providing the comprehensive program of mosquito control (the "Program"); and

WHEREAS, the Board approved the ranking for RFP #17/18-2 on January 23, 2018, selecting Mosquito Control Services of Florida, LLC, as the number one ranked firm for the services; and

WHEREAS, Mosquito Control Services of Florida, LLC, the CONTRACTOR, is qualified and agrees to provide the required services as set forth in RFP #17/18-2; and

NOW THEREFORE, for and in consideration of the mutual promises and covenants hereinafter set forth and for other good and valuable consideration, the receipt, adequacy, and sufficiency of which are hereby acknowledged, the parties agree as follows:

I. DESCRIPTION OF THE PROGRAM

The Program shall consist of mosquito control and abatement through an integrated pest management approach as described in the official Mosquito Control Association training manual, as well as inspection and surveillance to determine specific need and extent of control measures applied. In particular, the Program includes inspection, surveillance, and chemical or biological control of larval and adult mosquitos on a year round basis; service request and complaint intake and resolution; public education; efficacy testing; expanded Zika surveillance and suppression, as needed; and disaster-related mosquito control, as needed.

The County will identify a County Representative as the primary contact person acting on behalf of the COUNTY. CONTRACTOR will identify a Manager as the primary contact person acting on behalf of the CONTRACTOR who shall be available twenty-four (24) hours, seven (7) days / week for emergency calls and shall provide the Manager's cellular telephone number to the County Representative.

II. TERM OF AGREEMENT

The term of this Agreement shall be for a period of twelve months beginning upon execution of this Agreement and ending March 29, 2019. Prior to, or upon completion of, the initial one-year term of this Agreement, the County shall have the option to renew the Agreement for an additional two (2) one (1) year periods. This Agreement may be modified at any time by written mutual consent of both parties.

III. STATEMENT OF CONTRACTUAL SERVICES

The services to be provided by the CONTRACTOR shall include those services as described in RFP #17/18-2, which RFP is incorporated herein by reference and by this reference made a part hereof; the CONTRACTOR's Response to RFP #17/18-2, which Response is incorporated herein by reference and by this reference made a part hereof; and the Scope of Services set forth in Exhibit -1, attached hereto.

IV. COMPENSATION AND METHOD OF PAYMENT

The CONTRACTOR shall invoice the COUNTY monthly in the amount of **$25,600.00** for services performed under this Agreement and shall apply a credit to the monthly invoice of **$1,800.00** for CONTRACTOR's use of the COUNTY's current mosquito control office building, chemical storage area, and two designated parking areas located at 5 Esplande Avenue, Green Cove Springs, FL as detailed in the Cost Proposal Form attached hereto as Exhibit-2. The COUNTY reserves the right to engage the CONTRACTOR with other required services listed within Exhibit-2 as needed and any such additional services shall be included on the monthly invoice. The costs included within the Cost Proposal Form, Exhibit-2, is inclusive with regard to personnel, equipment, chemicals, and office space unless otherwise specifically provided for in the attached Standard Addendum To All Contracts and Agreements, Exhibit-3.

All invoices shall be prepared by the CONTRACTOR and accompanied by any supporting data as may be required by the County Representative. All payments will be made in accordance with the provisions of the Local Government Prompt Payment Act.

V. BREACH OF SERVICES

As a breach of the services to be provided by CONTRACTOR would cause serious and substantial damages to the COUNTY, and the nature of this Agreement would render it impractical or extremely difficult to fix the actual damage sustained by the COUNTY due to any such breach, CONTRACTOR agrees that in case of a breach of this Agreement the County may elect to collect liquidated damages as specified below and that such sums being agreed as the amount which the COUNTY will be damaged by the breach of such service and not as a penalty. The decision to seek such damages shall not be construed as a waiver of any legal remedies the COUNTY may have as to any subsequent breach of service under this Agreement:

- Supervisor employed without a director's certification: $100.00 per day for every day employed.
- Failure to attempt to satisfactorily resolve citizen's complaints within two (2) work days: $100.00 per violation.

If CONTRACTOR fails to provide the mosquito control services required by the AGREEMENT for a period in excess of two (2) consecutive scheduled working days, other than times of civil disturbance or an Act of God beyond anyone's control, the COUNTY may take the following actions:

- Employ such means as the COUNTY may deem advisable and appropriate to continue work until such matter is resolved and the CONTRACTOR is again able to carry out operations under the Agreement.
- Deduct any and all operating expenses incurred by the COUNTY from any money then due or to become due to the CONTRACTOR, collect the amount due, either from the CONTRACTOR.
- If the CONTRACTOR is unable, for any cause, to assume performance at the end of three (3) calendar days, all obligations of the COUNTY to the CONTRACTOR under this Agreement shall cease and the COUNTY shall be free to negotiate with other contractors for the operation of the mosquito control services and/or take the actions provided below for bankruptcy, default, or breach of contract. Such actions shall not release the CONTRACTOR of its obligations and liability to the COUNTY for such breach of contract.
- In the event the CONTRACTOR shall be adjudged bankrupt, either by voluntary or involuntary proceedings, then this Agreement shall immediately terminate and in no event shall the Agreement be, or be treated as, an asset of the CONTRACTOR after adjudication of bankruptcy. If CONTRACTOR shall be proven insolvent, or fail in business, this Agreement may be terminated at the option of the COUNTY.
- All terms, conditions and specifications of this Agreement are considered material and failure to perform any part of the Agreement shall be considered a breach of contract. Should CONTRACTOR fail to perform any of its contractual obligations the COUNTY may at its option terminate the Agreement sixty (60) days after written notification to the Contractor to remedy the violation within said time.

VI. INSURANCE

The CONTRACTOR shall maintain insurance coverage as specified in RFP # 17/18-2. An insurance certificate consistent with the provisions of RFP # 17/18-2 shall be provided to the COUNTY upon execution of this Agreement. Should the CONTRACTOR receive a notice from the insurer that the coverage has been altered, terminated or non-renewed, for the insurance identified in the certificate or any other certificate subsequently provided to the COUNTY, the CONTRACTOR shall promptly provide a copy thereof to the County Representative and show such alternative insurance coverage from an insurer acceptable to the County Representative to the requirements of RFP # 17/18-2, and provide proof thereof to the project coordinator by appropriate certificate issued by the insurer.

VII. SUBCONTRACTING

Written approval from the COUNTY shall be required before subcontracting any portion of the CONTRACTOR's duties or services.

VIII. USE OF COUNTY FACILITIES

The COUNTY will provide the current mosquito control office building, chemical storage area, and two designated parking areas located at 5 Esplande Avenue, Green Cove Springs, FL (the

"Facilities") for use by CONTRACTOR. The COUNTY will furnish all utilities, including internet service, trash collection and pest control service for the Facilities. CONTRACTOR shall be responsible for providing any and all other remaining items necessary for managing the Program in Clay County, Florida, including its own office supplies and equipment. CONTRACTOR agrees to provide a monthly $1,800.00 credit to the COUNTY for use of the FACILITIES.

The COUNTY shall have the right to view and inspect the Facilities at any time during the term of this Agreement. The COUNTY shall also have the right to enter upon the Facilities at any and all reasonable times for the purpose of making alterations or repairs to any and all of the buildings. Upon execution of this Agreement, ***CONTRACTOR shall provide to COUNTY a set of duplicate keys to the Facilities.***

CONTRACTOR shall not be entitled to make any improvements to the Facilities without the express written permission of the COUNTY. CONTRACTOR shall not permit any lien to be placed upon the Facilities by reason of any improvements, as necessitated by their use of the Facilities.

CONTRACTOR shall keep the Facilities in good repair, and the grounds in a sanitary condition, (i.e., picking up and collecting all trash) as well as conforming to all laws affecting the Facilities. If at any time the COUNTY shall determine that any of these conditions are not in compliance, then the CONTRACTOR shall be required to make full restitution of the cost to the COUNTY for CONTRACTOR's failure to correct these conditions.

CONTRACTOR shall make no unlawful, improper, or offensive use of the property, including but not limited to: no alcoholic beverages or liquor is to be brought in the Facilities, consumed, displayed or discarded thereon (Clay County Code, Chapter 3, Article I, Ordinance 17-27).

Upon expiration of this Agreement, CONTRACTOR shall return the Facilities in as good condition in all respects as they are now tendered to it, reasonable wear, tear and damage excepted.

IX. INDEMNIFICATION

The CONTRACTOR shall indemnify and hold harmless the COUNTY, and its officers and employees, from liabilities, damages, losses, and costs, including, but not limited to, reasonable attorneys' fees, to the extent caused by the negligence, recklessness, or intentionally wrongful conduct of the CONTRACTOR and other persons employed or utilized by the CONTRACTOR in the performance of this Agreement. This provision shall survive the termination or expiration of this Agreement.

X. TERMINATION

The COUNTY shall have the right at any time upon sixty (60) calendar days written notice to the CONTRACTOR to terminate the services of the CONTRACTOR. In the event of termination, the CONTRACTOR shall cease work thirty (30) calendar days after written notice and remove all belongings from the Facilities provided to the CONTRACTOR by the end of the sixty (60) day notice period. The COUNTY shall pay to the CONTRACTOR and the CONTRACTOR shall accept as full payment for its services, a sum of money equal to the prorated amount of services provided at that time less all previous payments.

In the event the CONTRACTOR has abandoned performance under this Agreement, then the COUNTY may terminate this Agreement upon three (3) calendar days written notice to the CONTRACTOR indicating its intention to do so. The written notice shall state the evidence indicating the CONTRACTOR's abandonment. The CONTRACTOR shall immediately vacate the Facilities. The CONTRACTOR shall remain liable to the COUNTY for any and all damages to the COUNTY arising out of such default.

XI. CHOICE OF LAW/FORUM

The COUNTY and the CONTRACTOR both expressly agree that the terms and conditions hereof, and the subsequent performance hereunder, shall be construed and controlled exclusively in accordance with the law of the State of Florida, that jurisdiction shall be limited to the courts of the State of Florida, and that venue shall lie exclusively in Clay County, Florida.

In the event either party shall retain an attorney to litigate on its behalf against the other party regarding the enforcement or interpretation of this Agreement or regarding the rights, remedies, obligations, or liabilities of the parties arising under this Agreement, the party prevailing on the majority of its claims, or which successfully defends against a majority of the other party's claim, shall be entitled to an award of reasonable attorney's fees and costs against the other party, including fees and costs incurred from the date of referral of the dispute to the prevailing party's attorney through the conclusion of litigation, or incurred in bankruptcy or on appeal.

XII. SEVERABILITY

In the event one or more provisions of this Agreement are declared invalid, the balance of this Agreement shall remain in full force and effect.

XIII. USE OF AGREEMENT BY OTHER GOVERNMENT AGENCIES

At the option of the CONTRACTOR, the use of this Agreement resulting from RFP #17/18-2 may be extended to other governmental agencies, including the State of Florida, its agencies, political subdivisions, counties, and cities.

Each governmental agency allowed by the CONTRACTOR to use this Agreement shall do so independent of any other governmental entity. Each agency shall be responsible for its own purchases and shall be liable only for goods or services ordered, received and accepted. No agency receives any liability by virtue of RFP #17/18-2 and this Agreement.

XIV. ASSIGNMENT

The CONTRACTOR shall not assign any of its rights or duties under this Agreement to any other party without the prior written consent of the COUNTY, which consent may be withheld by the COUNTY for any or no reason. Any such assignment attempted by the CONTRACTOR without such prior written consent shall be null and void. If the CONTRACTOR attempts to assign any such rights or duties without securing such prior written consent, this Agreement may be declared terminated by the COUNTY.

XV. NOTICES

All notices relating to the parties' legal rights and remedies under this Agreement will be provided in writing and sent to the party's address set forth in the introductory paragraph above.

XVI. GENERAL CONDITIONS

This Agreement is subject to that certain Standard Addendum to All Contracts and Agreements, which is attached hereto as Exhibit-3 and made a part hereof.

A Scrutinized Companies Certification executed on behalf of the CONTRACTOR is attached hereto as Exhibit-4 and made a part hereof.

Paragraph headings are for the convenience of the parties and for reference purposes only and shall be given no legal effect.

This Agreement constitutes the entire agreement between the COUNTY and the CONTRACTOR and supersedes all prior written or oral understandings between the parties. This Agreement may only be amended, supplemented, or modified by a written instrument signed by authorized representatives of each party.

IN WITNESS WHEREOF, the parties hereto have caused this Agreement to be executed on their behalf by their duly authorized representatives, all as of the date and year first written above.

MOSQUITO CONTROL SERVICES OF FLORIDA, LLC.

BY: _____

[print name] Steven G. Parlovich

Its CEO / General Manager

CLAY COUNTY, a political subdivision of the State of Florida, by and through its Board of County Commissioners

BY: _____
Gavin Rollins,
Its Chairman

ATTEST: _____
S. C. Kopelousos,
County Manager

EXHIBIT-1

Scope of Services

SCOPE OF SERVICES AS SET FORTH IN RFP NO. 17/18-2, MOSQUITO CONTROL PROGRAM

Requirements: Management and Operational Requirements.

The Contractor shall furnish all necessary personnel, material, equipment, labor, supervision, facilities and shall otherwise provide all services necessary for, or incidental to, the performance of all work as defined in RFP #17/18-2. The Contractor will supervise and direct all work, workers and equipment. The Contractor is solely responsible for the means, methods, techniques, sequences, safety program and procedures used. The Contractor will employ and maintain a qualified and accessible supervisor in the area of operation who shall have the full authority to act on behalf of the Contractor.

The Contractor must abide by and show proof of compliance of all applicable state and federal laws and regulations regarding the use of pesticides and container disposal. The Contractor shall at all times maintain a full time staff member working within Clay County certified as a Mosquito Control Director by the Florida Department of Agriculture and Consumer Services. A copy of this certification is to be submitted to the County on a yearly basis. All communications given to the supervisor in writing by the County shall be binding.

Routine Services:

Inspection / Surveillance:

- **Mosquito Larvae:**

Identify Sites: Inspectors must locate mosquito breeding sites in Clay County and GPS map breeding sites using database software. Any additional sites suggested by or identified by the County will also be mapped and monitored. Resulting data will be used in subsequent larviciding and adulticiding programs. In addition, Contractor will notify the County Representative of mosquito breeding sites such as clogged ditches, which may need repair or other source reduction interventions.

Inspection: Mapped breeding sites which are permanent or semi-permanent sites will be sampled as necessary or at most monthly during the peak season to monitor mosquito larval numbers and treatment effectiveness. Other, more temporary, sites such as floodwater areas will be inspected for mosquito breeding a few days after each heavy rain. Surveillance for mosquito larvae must be conducted using standard mosquito survey techniques. Sufficient dips with a standard mosquito dipper must be made to determine the larvae density in breeding sites. Records of such inspections will show larvae density as a series of ranges per dip. Resulting data will be used in determining larvicide and adulticide needs.

- **Mosquito Adults:**

Surveillance for adult mosquitoes will be conducted primarily through the use of standard Light Traps. A minimum of twenty (20) such traps will be operated three (3) times each week during the mosquito breeding season. This schedule may be reduced or suspended during

periods of low temperatures provided the Contractor gives prior notice to the County. Light trap collections will be identified and reported as to the number of males / females of each pest species collected per light trap per collection night.

NOTE: The description of larval and adult inspection and/or surveillance techniques provided herein is not intended to exclude additional techniques; rather it is intended to represent minimal efforts required.

Chemical Control:

- **Adult Mosquito Control:**

Application of chemicals for adult mosquito control must be made by vehicle mounted Ultra Low Volume (ULV) sprayers or handheld ULV sprayers. The spray vehicle must be equipped with a map and tracking system to report time, location, speed and direction of the vehicle, as well as indicating when the sprayer was actively spraying and when it was not spraying. All spray records, and time/direction, spray on/off data must be available for inspection by the County Representative and/or his/her designee at any time.

The exact size of the acreages to be sprayed for control of adult mosquitoes must be determined by the extent and duration of the mosquito problem encountered, and the necessity to reduce their population to an acceptable level. Pesticides used are limited to those approved by Federal Environmental Protection Agency and must be applied in accordance with label directions. Pesticides may be diluted per label directions, but may not be applied at a rate lower than that prescribed on the label.

The calibration of all vehicle mounted ULV sprayers shall be checked prior to each use. This may be done either physically or by reviewing all daily paperwork detailing time sprayed and amount used. Droplet spectrum generation shall be determined routinely during the mosquito season through the use of a computer driven device. Proof of calibration and droplet size is to be submitted to the County Representative at any time upon request.

- **Larval Mosquito Control:**

Breeding sites found positive for mosquito larvae must be treated with chemical or biological controls using best management practices. Pesticide application must be made using power and/or hand operated equipment suitable for the chemical being applied, and in a manner consistent with label recommendations. Only pesticide approved for such use by Federal and State authorities shall be used.

As in the case of adult mosquito control, the exact amount of larviciding will be determined by the mosquito problem encountered. However, minimums described above must be met unless unusually low mosquito populations prevail. Should such conditions arise, a reduction in the amount of area sprayed will be allowed only at the discretion of the County Representative provided sufficient documentation of low mosquito populations is provided to the County Representative by the Contractor to justify said reduction, and provided that the County is in agreement with said determination.

- **Zika Suppression:**

Upon notification to the Contractor by the Department of Health or other responsible state agency that a person within Clay County has been diagnosed with mosquito borne Zika and there is a likelihood that this person contracted such while within said area, the Contractor shall notify the County Representative of the confirmation, and upon authorization from the County enact a transmission suppression plan in accordance with the protocol.

- **Efficacy Testing:**

Efficacy testing will be performed by making pre and post spray evaluations of the mosquito populations through the use of Traps and/or field cage testing (to see that the numbers are decreasing). Additionally, tests will be conducted using laboratory reared or filed captured adult mosquitoes placed in cages and subjected to acceptable testing techniques that generate a susceptibility base line using Bottle Bio Assay testing. Both types of testing will be conducted once each calendar year on each chemical routinely used by the contractor in Clay County to control mosquitoes.

Reporting: The Contractor shall submit a bi-weekly report to include, but not limited to, the following:

1. Brief narrative summary of general mosquito populations and contractor's response. Any unusual conditions should be noted
2. Light trap counts by location, mosquito species and gender, and total
3. Adulticiding report to include number of miles sprayed, and acres treated
4. Larviciding report to include square footage of area treated with biolarvicide
5. Service requests received to include number of adulticiding requests, number of larviciding requests, and number of sites inspected
6. Any other pertinent information requested by the County for state grant reporting

The contractor shall submit an annual report that provides a recap of the aforementioned reporting and includes the results of the annual efficacy testing results.

Public Education Program: In an effort to educate our community of our mosquito control program and what citizens can do to eliminate mosquito breeding sites and protect themselves from mosquitoes, Contractor shall do the following on an as-needed basis as requested by the County:

1. Prepare, on an as needed basis, press releases, flyers and other written public information materials to be disseminated via distribution to media, civic associations, schools, and by other means. The County will cover costs of printing and postage or negotiate such fee with the Contractor.
2. Prepare Public Service Announcements, and represent the County mosquito program on radio/television broadcasts.
3. Conduct presentations at schools, civic association meetings, public meetings as requested by the County, on an as needed basis.

Operations: Contractor to make examination based on current conditions. Contractor shall make its own examination, investigation and research regarding the proper method of doing the work, conditions affecting the work to be done, the labor, equipment, sites, facilities and materials needed thereon, and the quantity of the work to be performed and provide updates to the County on any changes to routine services.

Holidays: The Contractor may elect to observe the same holidays as those observed by the Clay County Board of County Commissioners by suspending services on these days providing that critical tasks must be performed as necessary. If there is an excessive mosquito hatch, spray operations will be extended to weekends and holidays, if necessary.

Complaints: All complaints shall be made directly to the Contractor or shall be forwarded to the Contractor by the County, and shall be given prompt and courteous attention. All complaints received must be responded to within forty-eight (48) hours, weather permitting, excluding weekends and holidays. It shall be the duty of the Contractor to investigate each complaint and take whatever steps that may be necessary to remedy the cause of the complaint, including treatment, recommendation to property owner and/or recommendation to the County. The County shall provide to the Contractor a list of complaints received by the County each day. The Contractor may obtain this list from the County each day either by telephone, e-mail, fax and/or personal visit to the County Office.

Program Equipment: All vehicles and other equipment shall be kept in good repair, clean appearance and in sanitary condition, acceptable to the County, at all times. Each vehicle shall appropriate spill kits and safety equipment and have clearly visible on each side the identity of the Contractor.

The trucks and movable equipment to be used for this Agreement shall be marked with identification numbers that are different for each truck. The numbers shall be shown clearly on each of side of every truck. Each individual digit of the number shall be at least three (3) inches high and two (2) inches wide and shall be clearly readable. Each truck must be equipped with either a two-way radio or a cellular phone to ensure communications with the company dispatcher and communication with the County.

Office: The Contractor shall maintain an office, chemical mixing facility and shop in Clay County as long as it continues to operate the County mosquito control program and shall designate such office as the place to which all notices, directions, orders, requests and complaints shall be mailed, served or delivered under this Agreement. The County shall be notified of the location of said office or of any changes thereof. The Contractor must have a local telephone number that is published and through which he/she can be contacted by the residents of Clay County between the hours of 8:00 am to 4:30 pm Monday through Friday, excluding holidays (list of holidays to be provided by department). If there is an excessive mosquito hatch, spray operations will be extended to weekends and holidays, if necessary. The Contractor may make use of the County's current Mosquito Control building, sheds and storage area located at 5 Esplande Avenue, Green Cove Springs, FL., if a monthly lump sum credit is agreed upon, the option selected by the County and applied to the County's bill for services.

ADDITIONAL SCOPE OF SERVICES TO BE PROVIDED ON AN AS NEEDED BASIS AS DIRECTED BY THE COUNTY:

Expanded Zika Surveillance: Contractor shall provide surveillance for the mosquito borne viruses of Zika as needed upon directive from the County. The potential public health impact of a Zika virus shall warrant an increase in surveillance and an acute proactive attitude. Should the current conditions indicate that the expanded surveillance program is not needed, the County will not authorize the services described herein.

Emergency response to natural or manmade disasters such as hurricanes: Post disaster services performed to address disaster related mosquito activity must be pre-authorized by the County if said services are beyond the routine services specified herein. Contractor must provide a list of Essential Duty Personnel (EDP) along with their telephone numbers and assure the availability of personnel and equipment to respond to potential mosquito problems following a major hurricane. The selected Contractor will be required to provide a response plan for said services. A summary of such plan shall be provided with proposals, with a full plan to be reviewed and found acceptable by the County and made part of the Contract document.

EXHIBIT-2

Cost Proposal Form

COST PROPOSAL FORM
RFP: 17/18-2, MOSQUITO CONTROL PROGRAM

The undersigned having carefully read and considered the scope of services provided for in this RFP document for a Mosquito Control Program for Clay County, does hereby offer to perform such services on behalf of the County, of the type and quality and conditions set forth in this document at the rates (expressed in words and figures) hereinafter set forth:

1. **Monthly Lump Sum Cost** (to be provided 12 months/year) for routine inspection, surveillance, larval and adult mosquito control, public education and complaint intake and resolution detailed in the scope of services.
   $ 25,600.00 per month times 12 months = $ 307,200.00 (annual rate)
   (Twenty-five thousand six hundred dollars) (Three hundred seven thousand two hundred dollars)
2. **Monthly Lump Sum Credit** (to be provided 12 months/year) for use of the County's current mosquito control building, sheds and storage area located at 5 Esplande Avenue, Green Cove Springs, FL. detailed in the scope of services. County reserves the right to only select this option if agreed to be in the best favor of the County.
   $ 1800.00 per month times 12 months = $ 21,600.00 (annual rate)
   (One thousand eight-hundred dollars) (Twenty-one thousand six-hundred dollars)
3. **Unit Price Cost** (to be provided as needed) for larviciding. Contractor shall charge the County $ .0015 per square foot which shall include all labor, chemicals, equipment and materials for every square foot of Clay County that is larvicided.
   (one and a half thousandths of one dollar)
4. **Unit Price Cost** (to be provided as needed) for truck mounted adult mosquito spraying. Contractor shall charge the County: $ 29.75 per mile which includes all labor, chemicals, equipment and materials. (Twenty-nine dollars and seventy-five cents)
5. **Unit Price Cost** (to be provided as needed, per the authorization of the County Representative) for expanded Zika transmission suppression protocol and for emergency services in response to natural or man-made disaster as detailed in the additional scope of services. Contractor shall charge the County: $ 1,250.00 per day. (This is in addition to cost of adulticide and larvicide) (One thousand two hundred fifty dollars)

COMPANY NAME: Mosquito Control Services, LLC. / Mosquito Control Services of Florida, LLC

The County reserves the right to select options and pricing for the above items that are in the best interested of the County. Contractors may provide additional price sheets for services, chemicals and equipment that are not described above. Additional pricing will not be considered in the evaluation of the proposals, however may be included and made part of the contract document and utilized as needed.

EXHIBIT-3

Standard Addendum To All Contracts and Agreements

STANDARD ADDENDUM TO ALL CONTRACTS AND AGREEMENTS
[General]

Any other provisions of the contract or agreement (the Agreement) to which this document is attached to the contrary notwithstanding, the provisions hereof take precedence over the provisions of the Agreement regardless of whether the matters addressed herein are also addressed in the Agreement, and shall be deemed an integral part of the Agreement as if set forth therein, having a force and effect of equal or superior dignity, as applicable, with the provisions thereof; provided, if provisions of the Agreement address a matter in a manner which results in a lower cost to the County than would prevail hereunder, then such provisions shall control and supersede the applicable provisions hereof. As used herein, the term "Contractor" means the vendor or other party to the Agreement providing construction, labor, materials, professional services, and/or equipment to the County thereunder; the term "County" means Clay County, a political subdivision of the State of Florida, its Board of County Commissioners, or any other name or label set forth in the Agreement identifying such entity; and the term "Parties" means the County and the Contractor together.

1. As used in this paragraph, the term "Act" means the Local Government Prompt Payment Act set forth in Part VII of Chapter 218, Florida Statutes; the term "Invoice" means a statement, invoice, bill, draw request or payment request submitted by the Contractor under the Agreement; the term "Manager" means the County Manager of the County; the term "Paying Agent" means the agent of the County to whom Invoices must be submitted if identified in the Agreement, or, if not so identified, the County's Finance Director; the term "Submittal Date" means, with respect to an Invoice, the submittal date thereof to the Paying Agent; and the term "Work" means the services rendered, or supplies, materials, equipment and the like constructed, delivered or installed under the Agreement. All payments for the Work shall be made by the County in accordance with the Act. Upon receipt of a proper Invoice, the County shall have the number of days provided in the Act in which to make payment.

(a) Promptly upon receipt of an Invoice submitted under this paragraph, the Paying Agent shall date stamp the same as received. Thereafter, the Paying Agent shall review the Invoice and may also review the Work as delivered, installed or performed to determine whether the quantity and quality of the Work is as represented in the Invoice and is as required by this Agreement. If the Paying Agent determines that the Invoice does not conform with the applicable requirements of the Agreement or this paragraph or that the Work within the scope of the Invoice has not been properly delivered, installed or performed in full accordance with the Agreement, the Paying Agent shall notify the Contractor in writing within 10 days after the improper Invoice is received that the Invoice is improper and indicate what corrective action on the part of the Contractor is needed to make the Invoice proper. The County shall pay each proper Invoice in accordance with the applicable provisions of the Act.

(b) By the submittal of an Invoice hereunder, the Contractor shall have been deemed to have warranted to the County that all Work for which payments have been previously received from the County shall be free and clear of liens, claims, security interests or other encumbrances in favor of the Contractor or any other person or entity for failure to make payment.

(c) The Parties will attempt to settle any payment dispute arising under this paragraph through consultation and a spirit of mutual cooperation. The dispute will be escalated to appropriate higher-level managers of the Parties, if necessary. If the dispute remains unresolved within 30 calendar days following the Submittal Date, then the Paying Agent shall schedule a meeting with the Manager between the Contractor's representative and the Paying Agent, to be held no later 45 calendar days following the Submittal Date, and shall provide written notice to the Contractor regarding the date, time and place of the meeting no less than 7 calendar days prior thereto. At the meeting, the

Contractor's representative and the Paying Agent shall submit to the Manager their respective positions regarding the dispute, including any testimony and documents in support thereof. The Manager shall issue a written decision resolving the dispute within 60 calendar days following the Submittal Date, and serve copies thereof on the Contractor's representative and the Paying Agent.

2. To the extent not otherwise expressly provided in the Agreement, any work or professional services subcontracted for by the Contractor for which the County has agreed to reimburse the Contractor shall not be marked-up, but shall be payable by the County only in the exact amount reasonably incurred by the Contractor. No other such subcontracted services shall be reimbursed.

3. To the extent not otherwise expressly provided in the Agreement, in the event the Agreement is for professional services, charged on a time basis, the County shall not be billed or invoiced for time spent traveling to and from the Contractor's offices or other points of dispatch of its subcontractors, employees, officers or agents in connection with the services being rendered.

4. To the extent not otherwise expressly provided in the Agreement, the County shall not be liable to reimburse the Contractor for any courier service, telephone, facsimile or postage charges incurred by the Contractor, except as follows, and then only in the exact amount incurred by the Contractor [if the space below is left blank then "NONE" is deemed to have been inserted therein]:

5. To the extent not otherwise expressly provided in the Agreement, the County shall not be liable to reimburse the Contractor for any copying expenses incurred by the Contractor except as follows, and then only at $0.05 per page [if the space below is left blank then "NONE" is deemed to have been inserted therein]:

6. If and only if travel and per diem expenses are addressed in the Agreement in a manner which expressly provides for the County to reimburse the Contractor for the same, then the County shall reimburse the Contractor <u>only</u> for those travel and per diem expenses reasonably incurred and only in accordance with the provisions of Section 112.061, Florida Statutes. In the event the Contractor has need to utilize hotel accommodations or common carrier services, the County shall reimburse the Contractor for his, her or its reasonable expense incurred thereby provided prior approval of the Manager or his or her designee is obtained.

7. With respect to drawings and/or plans prepared on behalf of the County by the Contractor under the Agreement, unless specifically provided otherwise therein, complete sets of such drawings and/or plans shall be reproduced by the Contractor without cost to the County for all bidders requesting the same, and five complete sets of such drawings and/or plans shall be reproduced and delivered to the County without cost.

8. With respect to any indemnification by the County provided under the Agreement, any such indemnification shall be subject to and within the limitations set forth in Section 768.28, Florida Statutes, and to any other limitations, restrictions and prohibitions that may be provided by law, and shall not be deemed to operate as a waiver of the County's sovereign immunity.

9. In that the County is a governmental agency exempt from sales and use taxes, the County shall pay no such taxes, any other provisions of the Agreement to the contrary notwithstanding. The County shall provide proof of its exempt status upon reasonable request.

10. Any pre-printed provisions of the Agreement to the contrary notwithstanding, the same shall not automatically renew but shall be renewed only upon subsequent agreement of the Parties.

11. The Contractor acknowledges that in the budget for each fiscal year of the County during which the term of the Agreement is in effect a limited amount of funds are appropriated which are available to make payments arising under the Agreement. Any other provisions of the Agreement to the contrary notwithstanding, and pursuant to the provisions of Section 129.07, Florida Statutes, the maximum payment that the County is obligated to make under the Agreement from the budget of any fiscal year shall not exceed the appropriation for said fiscal year.

12. PUBLIC RECORDS LAW: The Contractor acknowledges the County's obligation under Art. 1, Section 24, Florida Constitution, and Chapter 119, Florida Statutes, as from time to time amended (together, the Public Records Laws), to release public records to members of the public upon request. The Contractor acknowledges that the County is required to comply with the Public Records Laws in the handling of the materials created under the Agreement and that the Public Records Laws control over any contrary terms in the Agreement. In accordance with the requirements of Section 119.0701, Florida Statutes, the Contractor covenants to comply with the Public Records Laws, and in particular to:

(a) Keep and maintain public records required by the County to perform the services required under the Agreement;

(b) Upon request from the County's custodian of public records, provide the County with a copy of the requested records or allow the records to be inspected or copied within a reasonable time at a cost that does not exceed the cost provided in Chapter 119, Florida Statutes, or as otherwise provided by law;

(c) Ensure that public records that are exempt or confidential and exempt from public records disclosure requirements are not disclosed except as authorized by law for the duration of the Agreement term and following completion of the Agreement if the Contractor does not transfer the records to the County; and,

(d) Upon completion of the Agreement, transfer, at no cost, to the County all public records in possession of the Contractor or keep and maintain public records required by the County to perform the services. If the Contractor transfers all public records to the County upon completion of the Agreement, the Contractor shall destroy any duplicate public records that are exempt or confidential and exempt from public records disclosure requirements. If the Contractor keeps and maintains public records upon completion of the Agreement, the Contractor shall meet all applicable requirements for retaining public records. All records stored electronically must be provided to the County, upon request from the County's custodian of public records, in a format that is compatible with the information technology systems of the County.

13. The Contractor's failure to comply with the requirements of paragraph 12 shall be deemed a material breach of the Agreement, for which the County may terminate the Agreement immediately upon written notice to the Contractor.

14. The Contractor acknowledges the provisions of Section 119.0701(3)(a), Florida Statutes, which, as applicable to the County and the Contractor, require as follows:

(a) A request to inspect or copy public records relating to the Agreement must be made directly to the County. If the County does not possess the requested records, the County shall immediately notify the Contractor of the request, and the Contractor must provide the records to the County or allow the records to be inspected or copied within a reasonable time.

(b) If the Contractor does not comply with the County's request for records, the County shall enforce the contract provisions in accordance with the Agreement.

(c) If the Contractor fails to provide the public records to the County within a reasonable time, the Contractor may be subject to penalties under Section 119.10, Florida Statutes.

15. IF THE CONTRACTOR HAS QUESTIONS REGARDING THE APPLICATION OF CHAPTER 119, FLORIDA STATUTES, TO THE CONTRACTOR'S DUTY TO PROVIDE PUBLIC RECORDS RELATING TO THE AGREEMENT, CONTACT THE CUSTODIAN OF PUBLIC RECORDS AT (904) 278-4754, publicrecords@claycountygov.com, POST OFFICE BOX 1366, GREEN COVE SPRINGS, FLORIDA 32043.

16. As used in this paragraph, the term "Statute" means Section 287.135, Florida Statutes; the term "Certification" means a certification submitted by the Contractor under subsection (5) of the Statute in connection with submitting a bid or proposal for the Agreement or entering into or renewing the Agreement; and the term "Qualified Contract" means a contract with the County for goods or services of $1 million or more.

(a) If the Agreement is a Qualified Contract entered into or renewed on or before September 30, 2016, then the County shall have the option of terminating the Agreement if the Contractor:

(i) is found to have submitted a false Certification;

(ii) has been placed on the Scrutinized Companies with Activities in Sudan List or the Scrutinized Companies with Activities in the Iran Petroleum Energy Sector List as referred to in subsection (2) of the Statute; or,

(iii) has been engaged in business operations in Cuba or Syria as defined in subsection (1) of the Statute.

(b) If the Agreement is a Qualified Contract entered into or renewed on or after October 1, 2016, then the County shall have the option of terminating the Agreement if the Contractor:

(i) is found to have submitted a false Certification;

(ii) has been placed on the Scrutinized Companies that Boycott Israel List as referred to in subsection (2) of the Statute, or is engaged in a boycott of Israel as defined in subsection (1) of the Statute;

(iii) has been placed on the Scrutinized Companies with Activities in Sudan List or the Scrutinized Companies with Activities in the Iran Petroleum Energy Sector List as referred to in subsection (2) of the Statute; or,

(iv) has been engaged in business operations in Cuba or Syria as defined in subsection (1) of the Statute.

[The remainder of this page is intentionally blank.]

County:

ATTEST FOR CLAY COUNTY:

Clay County, a political subdivision of the State of Florida, by its Board of County Commissioners

S. C. Kopelousos, County Manager and Clerk of the Board of County Commissioners

By: _____
Gavin Rollins
Its Chairman

Mosquito Control Services of Florida, LLC.

(Corporate Seal)

By: _____

Printed Name: Steven G. Pavlovich

Title: CEO / General Manager

\legal\contract\standardaddendum\2016\061416 standard addendum-[general]-4b

Form date 06-15-17

EXHIBIT-4

Scrutinized Companies Certification

Scrutinized Companies Certification

[Clay County: Mosquito Control Program]
INSERT PROJECT NAME

Name of Company:[1] Mosquito Control Services of Florida, LLC

In compliance with subsection (5) of Section 287.135(5), Florida Statutes (the Statute), the undersigned hereby certifies that the company named above is not participating in a boycott of Israel as defined in subsection (1) of the Statute; is not on the Scrutinized Companies with Activities in Sudan List or the Scrutinized Companies with Activities in the Iran Petroleum Energy Sector List as referred to in subsection (2) of the Statute; and does not have business operations in Cuba or Syria as defined in subsection (1) of the Statute.

Insert Name of Company:

Mosquito Control Services of Florida, LLC

(Seal)

By: Steven G. Pavlovich

Steven G. Pavlovich

Its CEO / General Manager

[1] "Company" means a sole proprietorship, organization, association, corporation, partnership, joint venture, limited partnership, limited liability partnership, limited liability company, or other entity or business association, including all wholly owned subsidiaries, majority-owned subsidiaries, parent companies, or affiliates of such entities or business associations, that exists for the purpose of making profit.

Form date 04-19-16

EXHIBIT B

STANDARD ADDENDUM TO ALL CONTRACTS AND AGREEMENTS

[General]

Any other provisions of the contract or agreement (the Agreement) to which this document is attached to the contrary notwithstanding, the provisions hereof take precedence over the provisions of the Agreement regardless of whether the matters addressed herein are also addressed in the Agreement, and shall be deemed an integral part of the Agreement as if set forth therein, having a force and effect of equal or superior dignity, as applicable, with the provisions thereof; provided, if provisions of the Agreement address a matter in a manner which results in a lower cost to the County than would prevail hereunder, then such provisions shall control and supersede the applicable provisions hereof. As used herein, the term "Contractor" means the vendor or other party to the Agreement providing construction, labor, materials, professional services, and/or equipment to the County thereunder; the term "County" means Clay County, a political subdivision of the State of Florida, its Board of County Commissioners, or any other name or label set forth in the Agreement identifying such entity; and the term "Parties" means the County and the Contractor together.

1. As used in this paragraph, the term "Act" means the Local Government Prompt Payment Act set forth in Part VII of Chapter 218, Florida Statutes; the term "Invoice" means a statement, invoice, bill, draw request or payment request submitted by the Contractor under the Agreement; the term "Manager" means the County Manager of the County; the term "Paying Agent" means the agent of the County to whom Invoices must be submitted if identified in the Agreement, or, if not so identified, the County's Finance Director; the term "Submittal Date" means, with respect to an Invoice, the submittal date thereof to the Paying Agent; and the term "Work" means the services rendered, or supplies, materials, equipment and the like constructed, delivered or installed under the Agreement. All payments for the Work shall be made by the County in accordance with the Act. Upon receipt of a proper Invoice, the County shall have the number of days provided in the Act in which to make payment.

(a) Promptly upon receipt of an Invoice submitted under this paragraph, the Paying Agent shall date stamp the same as received. Thereafter, the Paying Agent shall review the Invoice and may also review the Work as delivered, installed or performed to determine whether the quantity and quality of the Work is as represented in the Invoice and is as required by this Agreement. If the Paying Agent determines that the Invoice does not conform with the applicable requirements of the Agreement or this paragraph or that the Work within the scope of the Invoice has not been properly delivered, installed or performed in full accordance with the Agreement, the Paying Agent shall notify the Contractor in writing within 10 days after the improper Invoice is received that the Invoice is improper and indicate what corrective action on the part of the Contractor is needed to make the Invoice proper. The County shall pay each proper Invoice in accordance with the applicable provisions of the Act.

(b) By the submittal of an Invoice hereunder, the Contractor shall have been deemed to have warranted to the County that all Work for which payments have been previously received from the County shall be free and clear of liens, claims, security interests or other encumbrances in favor of the Contractor or any other person or entity for failure to make payment.

(c) The Parties will attempt to settle any payment dispute arising under this paragraph through consultation and a spirit of mutual cooperation. The dispute will be escalated to appropriate higher-level managers of the Parties, if necessary. If the dispute remains unresolved within 30 calendar days following the Submittal Date, then the Paying Agent shall schedule a meeting with the Manager between the Contractor's representative and the Paying Agent, to be held no later 45 calendar days

following the Submittal Date, and shall provide written notice to the Contractor regarding the date, time and place of the meeting no less than 7 calendar days prior thereto. At the meeting, the Contractor's representative and the Paying Agent shall submit to the Manager their respective positions regarding the dispute, including any testimony and documents in support thereof. The Manager shall issue a written decision resolving the dispute within 60 calendar days following the Submittal Date, and serve copies thereof on the Contractor's representative and the Paying Agent.

2. To the extent not otherwise expressly provided in the Agreement, any work or professional services subcontracted for by the Contractor for which the County has agreed to reimburse the Contractor shall not be marked-up, but shall be payable by the County only in the exact amount reasonably incurred by the Contractor. No other such subcontracted services shall be reimbursed.

3. To the extent not otherwise expressly provided in the Agreement, in the event the Agreement is for professional services, charged on a time basis, the County shall not be billed or invoiced for time spent traveling to and from the Contractor's offices or other points of dispatch of its subcontractors, employees, officers or agents in connection with the services being rendered.

4. To the extent not otherwise expressly provided in the Agreement, the County shall not be liable to reimburse the Contractor for any courier service, telephone, facsimile or postage charges incurred by the Contractor, except as follows, and then only in the exact amount incurred by the Contractor [if the space below is left blank then "NONE" is deemed to have been inserted therein]:

5. To the extent not otherwise expressly provided in the Agreement, the County shall not be liable to reimburse the Contractor for any copying expenses incurred by the Contractor except as follows, and then only at $0.05 per page [if the space below is left blank then "NONE" is deemed to have been inserted therein]:

6. If and only if travel and per diem expenses are addressed in the Agreement in a manner which expressly provides for the County to reimburse the Contractor for the same, then the County shall reimburse the Contractor <u>only</u> for those travel and per diem expenses reasonably incurred and only in accordance with the provisions of Section 112.061, Florida Statutes. In the event the Contractor has need to utilize hotel accommodations or common carrier services, the County shall reimburse the Contractor for his, her or its reasonable expense incurred thereby provided prior approval of the Manager or his or her designee is obtained.

7. With respect to drawings and/or plans prepared on behalf of the County by the Contractor under the Agreement, unless specifically provided otherwise therein, complete sets of such drawings and/or plans shall be reproduced by the Contractor without cost to the County for all bidders requesting the same, and five complete sets of such drawings and/or plans shall be reproduced and delivered to the County without cost.

8. With respect to any indemnification by the County provided under the Agreement, any such indemnification shall be subject to and within the limitations set forth in Section 768.28, Florida Statutes, and to any other limitations, restrictions and prohibitions that may be provided by law, and shall not be deemed to operate as a waiver of the County's sovereign immunity.

9. In that the County is a governmental agency exempt from sales and use taxes, the County shall pay no such taxes, any other provisions of the Agreement to the contrary notwithstanding. The County shall provide proof of its exempt status upon reasonable request.

10. Any pre-printed provisions of the Agreement to the contrary notwithstanding, the same shall not automatically renew but shall be renewed only upon subsequent agreement of the Parties.

11. The Contractor acknowledges that in the budget for each fiscal year of the County during which the term of the Agreement is in effect a limited amount of funds are appropriated which are available to make payments arising under the Agreement. Any other provisions of the Agreement to the contrary notwithstanding, and pursuant to the provisions of Section 129.07, Florida Statutes, the maximum payment that the County is obligated to make under the Agreement from the budget of any fiscal year shall not exceed the appropriation for said fiscal year.

12. PUBLIC RECORDS LAW: The Contractor acknowledges the County's obligation under Art. 1, Section 24, Florida Constitution, and Chapter 119, Florida Statutes, as from time to time amended (together, the Public Records Laws), to release public records to members of the public upon request. The Contractor acknowledges that the County is required to comply with the Public Records Laws in the handling of the materials created under the Agreement and that the Public Records Laws control over any contrary terms in the Agreement. In accordance with the requirements of Section 119.0701, Florida Statutes, the Contractor covenants to comply with the Public Records Laws, and in particular to:

(a) Keep and maintain public records required by the County to perform the services required under the Agreement;

(b) Upon request from the County's custodian of public records, provide the County with a copy of the requested records or allow the records to be inspected or copied within a reasonable time at a cost that does not exceed the cost provided in Chapter 119, Florida Statutes, or as otherwise provided by law;

(c) Ensure that public records that are exempt or confidential and exempt from public records disclosure requirements are not disclosed except as authorized by law for the duration of the Agreement term and following completion of the Agreement if the Contractor does not transfer the records to the County; and,

(d) Upon completion of the Agreement, transfer, at no cost, to the County all public records in possession of the Contractor or keep and maintain public records required by the County to perform the services. If the Contractor transfers all public records to the County upon completion of the Agreement, the Contractor shall destroy any duplicate public records that are exempt or confidential and exempt from public records disclosure requirements. If the Contractor keeps and maintains public records upon completion of the Agreement, the Contractor shall meet all applicable requirements for retaining public records. All records stored electronically must be provided to the County, upon request from the County's custodian of public records, in a format that is compatible with the information technology systems of the County.

13. The Contractor's failure to comply with the requirements of paragraph 12 shall be deemed a material breach of the Agreement, for which the County may terminate the Agreement immediately upon written notice to the Contractor.

14. The Contractor acknowledges the provisions of Section 119.0701(3)(a), Florida Statutes, which, as applicable to the County and the Contractor, require as follows:

(a) A request to inspect or copy public records relating to the Agreement must be made directly to the County. If the County does not possess the requested records, the County shall immediately notify the Contractor of the request, and the Contractor must provide the records to the County or allow the records to be inspected or copied within a reasonable time.

(b) If the Contractor does not comply with the County's request for records, the County shall enforce the contract provisions in accordance with the Agreement.

(c) If the Contractor fails to provide the public records to the County within a reasonable time, the Contractor may be subject to penalties under Section 119.10, Florida Statutes.

15. IF THE CONTRACTOR HAS QUESTIONS REGARDING THE APPLICATION OF CHAPTER 119, FLORIDA STATUTES, TO THE CONTRACTOR'S DUTY TO PROVIDE PUBLIC RECORDS RELATING TO THE AGREEMENT, CONTACT THE CUSTODIAN OF PUBLIC RECORDS AT (904) 278-4754, publicrecords@claycountygov.com, POST OFFICE BOX 1366, GREEN COVE SPRINGS, FLORIDA 32043.

16. In accordance with Section 287.135(3), Florida Statutes, the County shall have the option of terminating any contract with the County for goods or services of any amount that is entered into or renewed on or after July 1, 2018, if the Contractor is found to have been placed on the Scrutinized Companies that Boycott Israel List as referred to in Section 287.135(2), or is engaged in a boycott of Israel as defined in Section 287.135(1).

Further, as provided in Section 287.135(3), Florida Statutes, the County shall have the option of terminating a contract with the County for goods or services of $1 million or more that is:

(a) entered into or renewed on or before September 30, 2016, and :

(i) is found to have submitted a false certification as provided under Section 287.135(5);

(ii) has been placed on the Scrutinized Companies with Activities in Sudan List or the Scrutinized Companies with Activities in the Iran Petroleum Energy Sector List as referred to in Section 287.135(2); or,

(iii) has been engaged in business operations in Cuba or Syria as defined in Section 287.135(1).

(b) entered into or renewed on or after October 1, 2016, through June 30, 2018, and:

(i) is found to have submitted a false certification as provided under Section 287.135(5);

(ii) has been placed on the Scrutinized Companies that Boycott Israel List as referred to in Section 287.135(2), or is engaged in a boycott of Israel as defined in Section 287.135(1);

(iii) has been placed on the Scrutinized Companies with Activities in Sudan List or the Scrutinized Companies with Activities in the Iran Petroleum Energy Sector List as referred to in Section 287.135(2); or,

(iv) has been engaged in business operations in Cuba or Syria as defined in Section 287.135(1).

(c) entered into or renewed on or after July 1, 2018, and:

(i) is found to have submitted a false certification as provided under Section 287.135(5);

(ii) has been placed on the Scrutinized Companies with Activities in Sudan List or the Scrutinized Companies with Activities in the Iran Petroleum Energy Sector List as referred to in Section 287.135(2); or,

(iii) has been engaged in business operations in Cuba or Syria as defined in Section 287.135(1).

ATTEST FOR CLAY COUNTY:

Lorin L. Mock, Acting County Manager and
Clerk of the Board of County Commissioners

(Corporate Seal)

County:

Clay County, a political subdivision of the State of Florida, by its Board of County Commissioners

By: _____
Mike Cella
Its Chairman

Contractor Name: Mosquito Control Services of Florida

By: _____

Printed Name: Steven G. Pankow

Title: CEO / General Manager

Form date 07-01-18

EXHIBIT C

Scrutinized Companies Certification

[Clay County: Mosquito Control Program]
INSERT PROJECT NAME

Name of Company:[1] Mosquito Control Services of Florida, LLC

In compliance with subsection (5) of Section 287.135(5), Florida Statutes (the Statute), the undersigned hereby certifies that the company named above is not participating in a boycott of Israel as defined in subsection (1) of the Statute; is not on the Scrutinized Companies with Activities in Sudan List or the Scrutinized Companies with Activities in the Iran Petroleum Energy Sector List as referred to in subsection (2) of the Statute; and does not have business operations in Cuba or Syria as defined in subsection (1) of the Statute.

Insert Name of Company:

Mosquito Control Services of Florida, LLC

(Seal)

By: Steven G. Pawlowski

Steven G. Pawlowski

Its CEO / General Manager

[1] "Company" means a sole proprietorship, organization, association, corporation, partnership, joint venture, limited partnership, limited liability partnership, limited liability company, or other entity or business association, including all wholly owned subsidiaries, majority-owned subsidiaries, parent companies, or affiliates of such entities or business associations, that exists for the purpose of making profit.

SUMTER COUNTY BOARD OF COUNTY COMMISSIONERS
EXECUTIVE SUMMARY

SUBJECT: **Renewal of Sumter County Disaster Debris Hauling Services Agreement with Ceres Environmental Services, Inc.**

REQUESTED ACTION: **Staff Recommends Approval**

Meeting Type: Regular Meeting **DATE OF MEETING:** **5/12/2020**

CONTRACT: ☐ N/A Vendor/Entity: Ceres Environmental Services, Inc.

Effective Date: 6/26/2018 Termination Date: 6/25/2021

Managing Division / Dept: **Road & Bridge**

BUDGET IMPACT: Based on the need for services.

FUNDING SOURCE: **General Fund**

Type: Annual **EXPENDITURE ACCOUNT:** **001-340-541-3400**

HISTORY/FACTS/ISSUES:

On June 26, 2018, the BOCC approved an agreement with Ceres Environmental Services, Inc. through RFP 015-0-2018/RS for disaster debris hauling services. The original agreement expires on June 25, 2020 and has two, one-year renewals remaining. At this time, Sumter County wishes to extend the current agreement for one year.

All terms and conditions of the original contract shall remain in effect for the renewal period.

There will be one renewal remaining on this agreement.

Prepared by:	**Becky Segrest**	**Grammarly Check**	☒

Extension Agreement #1
Sumter County Disaster Debris Hauling Services Agreement

This agreement extension is made and entered into this 12th day of May 2020, between the Board of County Commissioners of Sumter County Florida, 7375 Powell Road, Wildwood, Florida 34785 (County) and Ceres Environmental Services, Inc. (Contractor) 3825 85th Avenue North, Brooklyn Park, Minnesota 55443.

WHEREAS, the parties executed an original agreement dated June 26, 2018 based on the Contractor's response to RFP 015-0-2018;

WHEREAS, the County wishes to extend the agreement for one year through June 25, 2021 under the same terms and conditions.

NOW, THEREFORE, the parties agree as follows:

1. That the certain agreement between the parties originally dated June 26, 2018, is hereby extended to June 25, 2021.
2. Contractor shall, at all times, comply with the Florida Public Records Law, the Florida Open Meeting Law and all other applicable laws, rules and regulations of the State of Florida.
3. **IF THE CONTRACTOR HAS QUESTIONS REGARDING THE APPLICATION OF CHAPTER 119, FLORIDA STATUTES, TO THE FIRMS' DUTY TO PROVIDE PUBLIC RECORDS RELATING TO THIS AGREEMENT, CONTACT THE CUSTODIAN OF PUBLIC RECORDS AT 352-689-4400, Sumter County Board of County Commissioners, 7375 Powell Road, Wildwood, Florida 34785 or via email at Records@sumtercountyfl.gov.**
4. Except as expressly modified by this Extension Agreement, all other terms and conditions of the original Agreement remain in full force and effect for the term of the Agreement.

THIS AGREEMENT is executed the day and year first written above.

BOARD OF COUNTY COMMISSIONERS,
SUMTER COUNTY, FLORIDA

Attest: Deputy Clerk

Date Signed: _____

By: _____
Chairman

Date Signed: _____

CERES ENVIRONMENTAL SERVICES, INC.
By: _____

Witness:
Date Signed: _____

Date Signed: _____

SUMTER COUNTY BOARD OF COUNTY COMMISSIONERS
EXECUTIVE SUMMARY

SUBJECT: **Renewal of Sumter County Disaster Debris Monitoring Services Agreement with Rostan Solutions, LLC**

REQUESTED ACTION: **Staff Recommends Approval**

Meeting Type: Regular Meeting **DATE OF MEETING:** **5/12/2020**

CONTRACT: ☐ N/A Vendor/Entity: Rostan Solutions, LLC
Effective Date: 6/26/2018 Termination Date: 6/25/2021
Managing Division / Dept: **Road & Bridge**

BUDGET IMPACT: Based on the need for services.
FUNDING SOURCE: **General Fund**
Type: Annual **EXPENDITURE ACCOUNT:** **001-340-541-3400**

HISTORY/FACTS/ISSUES:

On June 26, 2018, the BOCC approved an agreement with Rostan Solutions, LLC through RFP 016-0-2018/RS for disaster debris monitoring services. The original agreement expires on June 25, 2020 and has two, one-year renewals remaining. At this time, Sumter County wishes to extend the current agreement for one year.

All terms and conditions of the original contract shall remain in effect for the renewal period.

There will be one renewal remaining on this agreement.

Prepared by: **Becky Segrest** **Grammarly Check** ☒

Extension Agreement #1
Sumter County Disaster Debris Monitoring Services Agreement

This agreement extension is made and entered into this 12th day of May 2020, between the Board of County Commissioners of Sumter County Florida, 7375 Powell Road, Wildwood, Florida 34785 (County) and Rostan Solutions, LLC (Contractor) 3433 Lithia Pinecrest Road, Suite 287, Valrico, Florida 33596.

WHEREAS, the parties executed an original agreement dated June 26, 2018 based on the Contractor's response to RFP 016-0-2018;

WHEREAS, the County wishes to extend the agreement for one year through June 25, 2021 under the same terms and conditions.

NOW, THEREFORE, the parties agree as follows:

1. That the certain agreement between the parties originally dated June 26, 2018, is hereby extended to June 25, 2021.
2. Contractor shall, at all times, comply with the Florida Public Records Law, the Florida Open Meeting Law and all other applicable laws, rules and regulations of the State of Florida.
3. **IF THE CONTRACTOR HAS QUESTIONS REGARDING THE APPLICATION OF CHAPTER 119, FLORIDA STATUTES, TO THE FIRMS' DUTY TO PROVIDE PUBLIC RECORDS RELATING TO THIS AGREEMENT, CONTACT THE CUSTODIAN OF PUBLIC RECORDS AT 352-689-4400, Sumter County Board of County Commissioners, 7375 Powell Road, Wildwood, Florida 34785 or via email at Records@sumtercountyfl.gov.**
4. Except as expressly modified by this Extension Agreement, all other terms and conditions of the original Agreement remain in full force and effect for the term of the Agreement.

THIS AGREEMENT is executed the day and year first written above.

BOARD OF COUNTY COMMISSIONERS,
SUMTER COUNTY, FLORIDA

Attest: Deputy Clerk

Date Signed: _____

By: _____
Chairman

Date Signed: _____

ROSTAN SOLUTIONS, LLC
By: _____

Witness:
Date Signed: _____

Date Signed: _____

SUMTER COUNTY BOARD OF COUNTY COMMISSIONERS
EXECUTIVE SUMMARY

SUBJECT: State-Funded Grant Agreement Between State of Florida Department of Transportation (FDOT) and Sumter County Board of County Commissioners for the Construction and Construction Engineering Inspection (CEI) Services for The Sumter County Advanced Traffic Management System (ATMS) Phase 1 Project (Staff Recommends Approval).

REQUESTED ACTION: **Staff Recommends Approval**

Meeting Type: **Regular Meeting** **DATE OF MEETING:** **5/12/2020**

CONTRACT: ☐ N/A Vendor/Entity: **FDOT**
Effective Date: **5/12/2020** Termination Date: **9/30/2021**
Managing Division / Dept: **Engineering**

BUDGET IMPACT: **$1,107,780.00 ($924,060.00 Construction + $183,720.00 CEI)**

Type: Capital **FUNDING SOURCE:** **Secondary Trust Fund**
EXPENDITURE ACCOUNT: **106-340-541-6331**

HISTORY/FACTS/ISSUES:

This County Incentive Grant Program (CIGP) Agreement will assist the County in the construction and construction engineering inspection (CEI) services for the Sumter County Advanced Traffic Management System (ATMS) Phase 1 Project, FPN 436365-1-54-01. The maximum amount reimbursed by State funds is $300,000.00 (Construction/CEI).

This project is the first of three phases for the Sumter County Advanced Traffic Management System (ATMS). Phase 1 includes three roadway segments. The length of phase 1 is approximately 4.1 miles (does not include the communications network from the Traffic Management Center [TMC] to each roadway segment). The project limits/segments are (1) County Road 466 (C-466) from US 301 to Buena Vista Boulevard, 2.0 miles, (2) C-466A from Powell Road to Buena Vista Boulevard, 1.5 miles, and (3) C-466A from Morse Boulevard to Farner Place, 0.6 miles. Phase 1 Construction will consist of constructing a TMC at the Public Works offices in Bushnell, interconnecting the traffic signals in each roadway segment, and providing a communications system from the TMC to connect with the signals in each roadway segment.

Prepared by: **Steven Cohoon** **Grammarly Check** ☒

STATE-FUNDED GRANT AGREEMENT

FPN: 436365-1-54-01	Fund: CIGP Org Code: 55054010508	FLAIR Category: 088572 FLAIR Obj: 751000
FPN: 436365-1-54-01	Fund: LF Org Code: N/A	FLAIR Category: N/A FLAIR Obj: N/A
FPN:	Fund: Org Code:	FLAIR Category: FLAIR Obj:
County No:18	Contract No:	Vendor No: F596000865060

THIS STATE-FUNDED GRANT AGREEMENT ("Agreement") is entered into on _____,
(This date to be entered by DOT only)
by and between the State of Florida Department of Transportation, ("Department"), and Sumter County, ("Recipient"). The Department and the Recipient are sometimes referred to in this Agreement as a "Party" and collectively as the "Parties".

NOW, THEREFORE, in consideration of the mutual benefits to be derived from joint participation on the Project, the Parties agree to the following:

1. **Authority:** The Department is authorized to enter into this Agreement pursuant to Sections 334.044, 334.044(7), and (*select the applicable statutory authority for the program(s) below):*
   ☒ Section 339.2817 Florida Statutes, County Incentive Grant Program (CIGP), (CSFA 55.008)
   ☐ Section 339.2818 Florida Statutes, Small County Outreach Program (SCOP), (CSFA 55.009)
   ☐ Section 339.2816 Florida Statutes, Small County Road Assistance Program (SCRAP), (CSFA 55.016)
   ☐ Section 339.2819 Florida Statutes, Transportation Regional Incentive Program (TRIP), (CSFA 55.026)
   ☐ Insert Legal Authority , Insert Funding Program Name , Insert CSFA Number

   The Recipient by Resolution or other form of official authorization, a copy of which is attached as **Exhibit "E"**, **Recipient Resolution**, and made a part of this Agreement, has authorized its officers to execute this Agreement on its behalf.

2. **Purpose of Agreement:** The purpose of this Agreement is to provide for the Department's participation in Construction and CEI Services for the Sumter County Advanced Traffic Management System (ATMS) Phase 1, as further described in **Exhibit "A", Project Description and Responsibilities**, attached to and incorporated into this Agreement ("Project"); to provide Department financial assistance to the Recipient; state the terms and conditions upon which Department funds will be provided; and to set forth the manner in which the Project will be undertaken and completed.

3. **Term of the Agreement, Commencement and Completion of the Project:** This Agreement shall commence upon full execution by both Parties and the Recipient shall complete the Project on or before September 30, 2021. If the Recipient does not complete the Project within this time period, this Agreement will expire on the last day of the scheduled completion as provided in this paragraph unless an extension of the time period is requested by the Recipient and granted in writing by the Department prior to the expiration of this Agreement. Expiration of this Agreement will be considered termination of the Project. The Recipient acknowledges that no funding for the Project will be provided by the State under this Agreement for work on the Project that is not timely completed and invoiced in accordance with the terms of this Agreement, or for work performed prior to full execution of the Agreement. Notwithstanding the expiration of the required completion date provided in this Agreement and the consequent potential unavailability of any unexpended portion of State funding to be provided under this Agreement, the Recipient shall remain obligated to complete all aspects of the Project identified in **Exhibit "A"** in accordance with the remaining terms of this Agreement, unless otherwise agreed by the Parties, in writing.

Execution of this Agreement by both Parties shall be deemed a Notice to Proceed to the Recipient for the design phase or other non-construction phases of the Project. If the Project involves a construction phase, the Recipient shall not begin the construction phase of the Project until the Department issues a written Notice to Proceed for the construction phase. Prior to commencing the construction work described in this Agreement, the Recipient shall request a Notice to Proceed from the Department.

4. **Amendments, Extensions and Assignment:** This Agreement may be amended or extended upon mutual written agreement of the Parties. This Agreement shall not be assigned, transferred or otherwise encumbered by the Recipient under any circumstances without the prior written consent of the Department.

5. **Termination or Suspension of Project:** The Department may, by written notice to the Recipient, suspend any or all of the Department's obligations under this Agreement for the Recipient's failure to comply with applicable laws or the terms of this Agreement until such time as the event or condition resulting in such suspension has ceased or been corrected. The Department may also terminate this Agreement in whole or in part at any time the interest of the Department requires such termination.

   a. If the Department terminates the Agreement, the Department shall notify the Recipient of such termination in writing within thirty (30) days of the Department's determination to terminate the Agreement, with instructions as to the effective date of termination or to specify the stage of work at which the Agreement is to be terminated.

   b. The Parties to this Agreement may also terminate this Agreement when its continuation would not produce beneficial results commensurate with the further expenditure of funds. In this event, the Parties shall agree upon the termination conditions through mutual written agreement.

   c. If the Agreement is terminated before performance is completed, the Recipient shall be paid only for that work satisfactorily performed for which costs can be substantiated. Such payment, however, may not exceed an amount which is the same percentage of the contract price as the amount of work satisfactorily completed is a percentage of the total work called for by this Agreement. All work in progress on the Department right-of-way will become the property of the Department and will be turned over promptly by the Recipient.

   d. Upon termination of this Agreement, the Recipient shall, within thirty (30) days, refund to the Department any funds determined by the Department to have been expended in violation of this Agreement.

6. **Project Cost:**

   a. The estimated cost of the Project is $1,107,778.00. This amount is based upon the Schedule of Financial Assistance in **Exhibit "B"**, attached and incorporated in this Agreement. The Schedule of Financial Assistance may be modified by execution of an amendment of the Agreement by the Parties.

   b. The Department agrees to participate in the Project cost up to the maximum amount of $300,000.00 and, additionally the Department's participation in the Project shall not exceed N/A% of the total cost of the Project, and as more fully described in **Exhibit "B", Schedule of Financial Assistance**. The Department's participation may be increased or reduced upon a determination of the actual bid amounts of the Project by the execution of an amendment. The Recipient agrees to bear all expenses in excess of the amount of the Department's participation and any cost overruns or deficits incurred in connection with completion of the Project.

   c. The Department's participation in eligible Project costs is subject to, but not limited to:

      i. Legislative approval of the Department's appropriation request in the work program year that the Project is scheduled to be committed;

      ii. Approval of all plans, specifications, contracts or other obligating documents and all other terms of this Agreement; and

iii. Department approval of the Project scope and budget at the time appropriation authority becomes available.

7. Compensation and Payment:

a. The Department shall reimburse the Recipient for costs incurred to perform services described in the Project Description and Responsibilities in **Exhibit "A**", and as set forth in the Schedule of Financial Assistance in **Exhibit "B"**.

b. The Recipient shall provide quantifiable, measurable, and verifiable units of deliverables. Each deliverable must specify the required minimum level of service to be performed and the criteria for evaluating successful completion. The Project and the quantifiable, measurable, and verifiable units of deliverables are described more fully in **Exhibit "A"**, Project Description and Responsibilities. Any changes to the deliverables shall require an amendment executed by both parties.

c. Invoices shall be submitted no more often than monthly and no less than quarterly by the Recipient in detail sufficient for a proper pre-audit and post-audit, based on the quantifiable, measurable and verifiable deliverables as established in **Exhibit "A"**. Deliverables and costs incurred must be received and approved by the Department prior to reimbursements. Requests for reimbursement by the Recipient shall include an invoice, progress report and supporting documentation for the period of services being billed that are acceptable to the Department. The Recipient shall use the format for the invoice and progress report that is approved by the Department.

d. Supporting documentation must establish that the deliverables were received and accepted in writing by the Recipient and must also establish that the required minimum standards or level of service to be performed based on the criteria for evaluating successful completion as specified in **Exhibit "A"** has been met. All costs invoiced shall be supported by properly executed payrolls, time records, invoices, contracts or vouchers evidencing in proper detail the nature and propriety of charges as described in **Attachment F – Contract Payment Requirements**.

e. Travel expenses are not compensable under this Agreement.

f. Payment shall be made only after receipt and approval of deliverables and costs incurred unless advance payments are authorized by the Chief Financial Officer of the State of Florida under Chapters 215 and 216, Florida Statutes or the Department's Comptroller under Section 334.044(29), Florida Statutes.

☐ If this box is selected, advance payment is authorized for this Agreement and Exhibit "G", Alternative Advance Payment Financial Provisions is attached and incorporated into this Agreement.

If the Department determines that the performance of the Recipient is unsatisfactory, the Department shall notify the Recipient of the deficiency to be corrected, which correction shall be made within a time-frame to be specified by the Department. The Recipient shall, within thirty (30) days after notice from the Department, provide the Department with a corrective action plan describing how the Recipient will address all issues of contract non-performance, unacceptable performance, failure to meet the minimum performance levels, deliverable deficiencies, or contract non-compliance. If the corrective action plan is unacceptable to the Department, the Recipient will not be reimbursed to the extent of the non-performance. The Recipient will not be reimbursed until the Recipient resolves the deficiency. If the deficiency is subsequently resolved, the Recipient may bill the Department for the unpaid reimbursement request(s) during the next billing period. If the Recipient is unable to resolve the deficiency, the funds shall be forfeited at the end of the Agreement's term.

Recipients receiving financial assistance from the Department should be aware of the following time frames. Inspection and approval of deliverables and costs incurred shall take no longer than 20 days from the Department's receipt of the invoice. The Department has 20 days to deliver a request for payment (voucher) to the Department of Financial Services. The 20 days are measured from the latter of the date the invoice is received or the deliverables and costs incurred are received, inspected, and approved.

If a payment is not available within 40 days, a separate interest penalty at a rate as established pursuant to Section 55.03(1), Florida Statutes, will be due and payable, in addition to the invoice amount, to the Recipient. Interest penalties of less than one (1) dollar will not be enforced unless the Recipient requests payment. Invoices that have to be returned to a Recipient because of Recipient preparation errors will result in a delay in the payment. The invoice payment requirements do not start until a properly completed invoice is provided to the Department.

A Vendor Ombudsman has been established within the Department of Financial Services. The duties of this individual include acting as an advocate for Recipient who may be experiencing problems in obtaining timely payment(s) from a state agency. The Vendor Ombudsman may be contacted at (850) 413-5516.

g. The Recipient shall maintain an accounting system or separate accounts to ensure funds and projects are tracked separately. Records of costs incurred under the terms of this Agreement shall be maintained and made available upon request to the Department at all times during the period of this Agreement and for five years after final payment is made. Copies of these documents and records shall be furnished to the Department upon request. Records of costs incurred include the Recipient's general accounting records and the project records, together with supporting documents and records, of the contractor and all subcontractors performing work on the project, and all other records of the contractor and subcontractors considered necessary by the Department for a proper audit of costs.

h. **Progress Reports.** Upon request, the Recipient agrees to provide progress reports to the Department in the standard format used by the Department and at intervals established by the Department. The Department will be entitled at all times to be advised, at its request, as to the status of the Project and of details thereof.

i. If, after Project completion, any claim is made by the Department resulting from an audit or for work or services performed pursuant to this Agreement, the Department may offset such amount from payments due for work or services done under any agreement which it has with the Recipient owing such amount if, upon demand, payment of the amount is not made within 60 days to the Department. Offsetting any amount pursuant to this paragraph shall not be considered a breach of contract by the Department.

j. The Recipient must submit the final invoice on the Project to the Department within 120 days after the completion of the Project. Invoices submitted after the 120-day time period may not be paid.

k. The Department’s performance and obligation to pay under this Agreement is contingent upon an annual appropriation by the Legislature. If the Department's financial assistance for this Project is in multiple fiscal years, a notice of availability of funds from the Department’s project manager must be received prior to costs being incurred by the Recipient. See **Exhibit “B”** for funding levels by fiscal year. Project costs utilizing any fiscal year funds are not eligible for reimbursement if incurred prior to funds approval being received. The Department will notify the Recipient, in writing, when funds are available.

l. In the event this Agreement is in excess of $25,000 and has a term for a period of more than one year, the provisions of Section 339.135(6)(a), Florida Statutes, are hereby incorporated:

> "The Department, during any fiscal year, shall not expend money, incur any liability, or enter into any contract which, by its terms, involves the expenditure of money in excess of the amounts budgeted as available for expenditure during such fiscal year. Any contract, verbal or written, made in violation of this subsection is null and void, and no money may be paid on such contract. The Department shall require a statement from the comptroller of the Department that funds are available prior to entering into any such contract or other binding commitment of funds. Nothing herein contained shall prevent the making of contracts for periods exceeding 1 year, but any contract so made shall be executory only for the value of the services to be rendered or agreed to be paid for in succeeding fiscal years, and this paragraph shall be incorporated verbatim in all contracts of the Department which are for an amount in excess of $25,000 and which have a term for a period of more than 1 year."

m. Any Project funds made available by the Department pursuant to this Agreement which are determined by the Department to have been expended by the Recipient in violation of this Agreement or any other applicable law or regulation, shall be promptly refunded in full to the Department. Acceptance by the Department of any documentation or certifications, mandatory or otherwise permitted, that the Recipient files shall not constitute a waiver of the Department's rights as the funding agency to verify all information at a later date by audit or investigation.

n. In determining the amount of the payment, the Department will exclude all Project costs incurred by the Recipient prior to the execution of this Agreement, costs incurred prior to issuance of a Notice to Proceed, costs incurred after the expiration of the Agreement, costs which are not provided for in the latest approved Schedule of Financial Assistance in **Exhibit "B"** for the Project, costs agreed to be borne by the Recipient or its contractors and subcontractors for not meeting the Project commencement and final invoice time lines, and costs attributable to goods or services received under a contract or other arrangements which have not been approved in writing by the Department.

8. General Requirements:

The Recipient shall complete the Project with all practical dispatch in a sound, economical, and efficient manner, and in accordance with the provisions in this Agreement and all applicable laws.

a. The Recipient must obtain written approval from the Department prior to performing itself (through the efforts of its own employees) any aspect of the Project that will be funded under this Agreement.

☐ If this box is checked, then the Agency is permitted to utilize its own forces and the following provision applies: **Use of Agency Workforce.** In the event the Agency proceeds with any phase of the Project utilizing its own forces, the Agency will only be reimbursed for direct costs (this excludes general overhead).

b. The Recipient shall provide to the Department certification and a copy of appropriate documentation substantiating that all required right-of-way necessary for the Project has been obtained. Certification is required prior to authorization for advertisement for or solicitation of bids for construction of the Project, including if no right-of-way is required.

c. The Recipient shall comply and require its contractors and subcontractors to comply with all terms and conditions of this Agreement and all federal, state, and local laws and regulations applicable to this Project.

d. The Recipient shall have the sole responsibility for resolving claims and requests for additional work for the Project by the Recipient's contractors and consultants. No funds will be provided for payment of claims or additional work on the Project under this Agreement without the prior written approval of the claim or request for additional work by Department.

9. Contracts of the Recipient

a. The Department has the right to review and approve any and all third party contracts with respect to the Project before the Recipient executes any contract or obligates itself in any manner requiring the disbursement of Department funds under this Agreement, including consultant or construction contracts or amendments thereto. If the Department exercises this right and the Recipient fails to obtain such approval, the Department may deny payment to the Recipient. The Department may review the qualifications of any consultant or contractor and to approve or disapprove the employment of such consultant or contractor.

b. It is understood and agreed by the parties hereto that participation by the Department in a project that involves the purchase of commodities or contractual services or the purchasing of capital equipment or the equipping of facilities, where purchases or costs exceed the Threshold Amount for CATEGORY TWO per Chapter 287.017 Florida Statutes, is contingent on the Recipient complying in full with the provisions of Chapter 287.057 Florida Statutes The Recipient shall certify to the Department that the purchase of commodities or contractual services has been accomplished in compliance with Chapter 287.057 Florida Statutes It shall be the sole responsibility of the Recipient to ensure that any obligations made in accordance with this Section comply with the current threshold limits. Contracts, purchase orders, task orders,

construction change orders, or any other agreement that would result in exceeding the current budget contained in **Exhibit "B"**, or that are not consistent with the Project description and scope of services contained in **Exhibit "A"** must be approved by the Department prior to Recipient execution. Failure to obtain such approval, and subsequent execution of an amendment to the Agreement if required, shall be sufficient cause for nonpayment by the Department.

c. Participation by the Department in a project that involves a consultant contract for engineering, architecture or surveying services, is contingent on the Recipient's complying in full with provisions of Section 287.055, Florida Statutes, Consultants' Competitive Negotiation Act. In all cases, the Recipient shall certify to the Department that selection has been accomplished in compliance with the Consultants' Competitive Negotiation Act.

d. If the Project is procured pursuant to Chapter 255 for construction services and at the time of the competitive solicitation for the Project 50 percent or more of the cost of the Project is to be paid from state-appropriated funds, then the Recipient must comply with the requirements of Section 255.0991, Florida Statutes.

10. Design and Construction Standards and Required Approvals: In the event the Project includes construction the following provisions are incorporated into this Agreement:

a. The Recipient is responsible for obtaining all permits necessary for the Project.

b. In the event the Project involves construction on the Department's right-of-way, the Recipient shall provide the Department with written notification of either its intent to:

i. Award the construction of the Project to a Department prequalified contractor which is the lowest and best bidder in accordance with applicable state and federal statutes, rules, and regulations. The Recipient shall then submit a copy of the bid tally sheet(s) and awarded bid contract, or

ii. Construct the Project utilizing existing Recipient employees, if the Recipient can complete said Project within the time frame set forth in this Agreement. The Recipient's use of this option is subject to approval by the Department.

c. The Recipient shall hire a qualified contractor using the Recipient's normal bid procedures to perform the construction work for the Project. For projects that are not located on the Department's right-of-way, the Recipient is not required to hire a contractor prequalified by the Department unless the Department notifies the Recipient prior to letting that they are required to hire a contractor prequalified by the Department.

d. The Recipient is responsible for provision of Construction Engineering Inspection (CEI) services. The Department reserves the right to require the Recipient to hire a Department pre-qualified consultant firm that includes one individual that has completed the Advanced Maintenance of Traffic Level Training. Notwithstanding any provision of law to the contrary, design services and CEI services may not be performed by the same entity. Administration of the CEI staff shall be under the responsible charge of a State of Florida Licensed Professional Engineer who shall provide the certification that all design and construction for the Project meets the minimum construction standards established by Department. The Department shall have the right to approve the CEI firm. The Department shall have the right, but not the obligation, to perform independent assurance testing during the course of construction of the Project. Subject to the approval of the Department, the Recipient may choose to satisfy the requirements set forth in this paragraph by either hiring a Department prequalified consultant firm or utilizing Recipient staff that meet the requirements of this paragraph, or a combination thereof.

e. The Recipient is responsible for the preparation of all design plans for the Project. The Department reserves the right to require the Recipient to hire a Department pre-qualified consultant for the design phase of the Project using the Recipient's normal procurement procedures to perform the design services for the Project. Notwithstanding any provision of law to the contrary, design services and CEI services may not be performed by the same entity. All design work on the Project shall be performed in accordance with the requirements of all applicable laws and governmental rules and regulations and federal and state accepted design standards for the type of construction contemplated by the Project, including, as applicable, but not

limited to, the applicable provisions of the Manual of Uniform Traffic Control Devices (MUTCD) and the AASHTO Policy on Geometric Design of Streets and Highways. If any portion of the Project will be located on, under, or over any Department-owned right-of-way, the Department shall review the Project's design plans for compliance with all applicable standards of the Department, as provided in **Exhibit "F", Terms and Conditions of Construction**, which is attached to and incorporated into this Agreement.

f. The Recipient shall adhere to the Department's Conflict of Interest Procedure (FDOT Topic No. 375-030-006).

g. The Recipient will provide copies of the final design plans and specifications and final bid documents to the Department's Construction Project Manager prior to commencing construction of the Project. The Department will specify the number of copies required and the required format.

h. The Recipient shall require the Recipient's contractor to post a payment and performance bond in accordance with applicable law.

i. The Recipient shall be responsible to ensure that the construction work under this Agreement is performed in accordance with the approved construction documents, and that it will meet all applicable Recipient and Department standards.

j. Upon completion of the work authorized by this Agreement, the Recipient shall notify the Department in writing of the completion of construction of the Project; and for all design work that originally required certification by a Professional Engineer, this notification shall contain an Engineers Certification of Compliance, signed and sealed by a Professional Engineer, the form of which is attached hereto and incorporated herein as **Exhibit "C", Engineers Certification of Completion**. The certification shall state that work has been completed in compliance with the Project construction plans and specifications. If any deviations are found from the approved plans, the certification shall include a list of all deviations along with an explanation that justifies the reason to accept each deviation.

k. The Recipient shall provide the Department with as-built plans of any portions of the Project funded through the Agreement prior to final inspection.

11. Maintenance Obligations: In the event the Project includes construction then the following provisions are incorporated into this Agreement:

a. The Recipient agrees to maintain any portion of the Project not located on the State Highway System constructed under this Agreement for its useful life. If the Recipient constructs any improvement on Department right-of-way, the Recipient

☒ shall

☐ shall not

maintain the improvements located on the Department right-of-way made for their useful life. If the Recipient is required to maintain Project improvements located on the Department right-of-way beyond final acceptance, then Recipient shall, prior to any disbursement of the State funding provided under this Agreement, also execute a Maintenance Memorandum of Agreement in a form that is acceptable to the Department. The Recipient has agreed to the foregoing by resolution, and such resolution is attached and incorporated into this Agreement as **Exhibit "E"**. This provision will survive termination of this Agreement.

12. State Single Audit: The administration of resources awarded through the Department to the Recipient by this Agreement may be subject to audits and/or monitoring by the Department. The following requirements do not limit the authority of the Department to conduct or arrange for the conduct of additional audits or evaluations of state financial assistance or limit the authority of any state agency inspector general, the Auditor General, or any other state official. The Recipient shall comply with all audit and audit reporting requirements as specified below.

a. In addition to reviews of audits conducted in accordance with Section 215.97, Florida Statutes, monitoring procedures to monitor the Recipient's use of state financial assistance may include but not be limited to on-site visits by Department staff and/or other procedures including, reviewing any required performance and

financial reports, following up, ensuring corrective action, and issuing management decisions on weaknesses found through audits when those findings pertain to state financial assistance awarded through the Department by this Agreement. By entering into this Agreement, the Recipient agrees to comply and cooperate fully with any monitoring procedures/processes deemed appropriate by the Department. The Recipient further agrees to comply and cooperate with any inspections, reviews, investigations, or audits deemed necessary by the Department, the Department of Financial Services (DFS) or the Auditor General.

b. The Recipient, a nonstate entity as defined by Section 215.97(2)(n), Florida Statutes, as a recipient of state financial assistance awarded by the Department through this Agreement is subject to the following requirements:

i. In the event the Recipient meets the audit threshold requirements established by Section 215.97, Florida Statutes, the Recipient must have a State single or project-specific audit conducted for such fiscal year in accordance with Section 215.97, Florida Statutes; applicable rules of the Department of Financial Services; and Chapters 10.550 (local governmental entities) or 10.650 (nonprofit and for-profit organizations), Rules of the Auditor General. **Exhibit "D"** to this Agreement indicates state financial assistance awarded through the Department by this Agreement needed by the Recipient to further comply with the requirements of Section 215.97, Florida Statutes. In determining the state financial assistance expended in a fiscal year, the Recipient shall consider all sources of state financial assistance, including state financial assistance received from the Department by this Agreement, other state agencies and other nonstate entities. State financial assistance does not include Federal direct or pass-through awards and resources received by a nonstate entity for Federal program matching requirements.

ii. In connection with the audit requirements, the Recipient shall ensure that the audit complies with the requirements of Section 215.97(8), Florida Statutes. This includes submission of a financial reporting package as defined by Section 215.97(2)(e), Florida Statutes, and Chapters 10.550 (local governmental entities) or 10.650 (nonprofit and for-profit organizations), Rules of the Auditor General.

iii. In the event the Recipient does not meet the audit threshold requirements established by Section 215.97, Florida Statutes, the Recipient is exempt for such fiscal year from the state single audit requirements of Section 215.97, Florida Statutes. However, the Recipient must provide a single audit exemption statement to the Department at FDOTSingleAudit@dot.state.fl.us no later than nine months after the end of the Recipient's audit period for each applicable audit year. In the event the Recipient does not meet the audit threshold requirements established by Section 215.97, Florida Statutes, in a fiscal year and elects to have an audit conducted in accordance with the provisions of Section 215.97, Florida Statutes, the cost of the audit must be paid from the Recipient's resources (i.e., the cost of such an audit must be paid from the Recipient's resources obtained from other than State entities).

iv. In accordance with Chapters 10.550 (local governmental entities) or 10.650 (nonprofit and for-profit organizations), Rules of the Auditor General, copies of financial reporting packages required by this Agreement shall be submitted to:

Florida Department of Transportation
Office of Comptroller, MS 24
605 Suwannee Street
Tallahassee, FL 32399-0405
Email: FDOTSingleAudit@dot.state.fl.us

And

State of Florida Auditor General
Local Government Audits/342
111 West Madison Street, Room 401
Tallahassee, FL 32399-1450
Email: flaudgen_localgovt@aud.state.fl.us

v. Any copies of financial reporting packages, reports or other information required to be submitted to the Department shall be submitted timely in accordance with Section 215.97, Florida Statutes, and Chapters 10.550 (local governmental entities) or 10.650 (nonprofit and for-profit organizations), Rules of the Auditor General, as applicable.

vi. The Recipient, when submitting financial reporting packages to the Department for audits done in accordance with Chapters 10.550 (local governmental entities) or 10.650 (nonprofit and for-profit organizations), Rules of the Auditor General, should indicate the date the reporting package was delivered to the Recipient in correspondence accompanying the reporting package.

vii. Upon receipt, and within six months, the Department will review the Recipient's financial reporting package, including corrective action plans and management letters, to the extent necessary to determine whether timely and appropriate corrective action on all deficiencies has been taken pertaining to the state financial assistance provided through the Department by this Agreement. If the Recipient fails to have an audit conducted consistent with Section 215.97, Florida Statutes, the Department may take appropriate corrective action to enforce compliance.

viii. As a condition of receiving state financial assistance, the Recipient shall permit the Department, or its designee, DFS or the Auditor General access to the Recipient's records including financial statements, the independent auditor's working papers and project records as necessary. Records related to unresolved audit findings, appeals or litigation shall be retained until the action is complete or the dispute is resolved.

c. The Recipient shall retain sufficient records demonstrating its compliance with the terms of this Agreement for a period of five years from the date the audit report is issued and shall allow the Department, or its designee, DFS or the Auditor General access to such records upon request. The Recipient shall ensure that the audit working papers are made available to the Department, or its designee, DFS or the Auditor General upon request for a period of five years from the date the audit report is issued unless extended in writing by the Department.

13. Restrictions, Prohibitions, Controls and Labor Provisions:

a. A person or affiliate who has been placed on the convicted vendor list following a conviction for a public entity crime may not submit a bid on a contract to provide any goods or services to a public entity; may not submit a bid on a contract with a public entity for the construction or repair of a public building or public work; may not submit bids on leases of real property to a public entity; may not be awarded or perform work as a contractor, supplier, subcontractor or consultant under a contract with any public entity; and may not transact business with any public entity in excess of the threshold amount provided in Section 287.017, Florida Statutes, for CATEGORY TWO for a period of 36 months from the date of being placed on the convicted vendor list.

b. In accordance with Section 287.134, Florida Statutes, an entity or affiliate who has been placed on the Discriminatory Vendor List, kept by the Florida Department of Management Services, may not submit a bid on a contract to provide goods or services to a public entity; may not submit a bid on a contract with a public

entity for the construction or repair of a public building or public work; may not submit bids on leases of real property to a public entity; may not be awarded or perform work as a contractor, supplier, subcontractor or consultant under a contract with any public entity; and may not transact business with any public entity.

c. An entity or affiliate who has had its Certificate of Qualification suspended, revoked, denied or have further been determined by the Department to be a non-responsible contractor may not submit a bid or perform work for the construction or repair of a public building or public work on a contract with the Recipient.

d. No funds received pursuant to this Agreement may be expended for lobbying the Florida Legislature, judicial branch, or any state agency, in accordance with Section 216.347, Florida Statutes.

e. The Department shall consider the employment by any contractor of unauthorized aliens a violation of Section 274A(e) of the Immigration and Nationality Act. If the contractor knowingly employs unauthorized aliens, such violation will be cause for unilateral cancellation of this Agreement.

f. The Recipient shall:

i. Utilize the U.S. Department of Homeland Security's E-Verify system to verify the employment eligibility of all new employees hired by the Recipient during the term of the contract; and

ii. Expressly require any subcontractors performing work or providing services pursuant to the state contract to likewise utilize the U.S. Department of Homeland Security's E-Verify system to verify the employment eligibility of all new employees hired by the subcontractor during the contract term.

g. The Recipient shall comply and require its contractors and subcontractors to comply with all terms and conditions of this Agreement and all federal, state, and local laws and regulations applicable to this Project.

14. Indemnification and Insurance:

a. It is specifically agreed between the parties executing this Agreement that it is not intended by any of the provisions of any part of this Agreement to create in the public or any member thereof, a third-party beneficiary under this Agreement, or to authorize anyone not a party to this Agreement to maintain a suit for personal injuries or property damage pursuant to the terms or provisions of this Agreement. The Recipient guarantees the payment of all just claims for materials, supplies, tools, or labor and other just claims against the Recipient or any subcontractor, in connection with this Agreement.

b. To the extent provided by law, Recipient shall indemnify, defend, and hold harmless the Department against any actions, claims, or damages arising out of, relating to, or resulting from negligent or wrongful act(s) of Recipient, or any of its officers, agents, or employees, acting within the scope of their office or employment, in connection with the rights granted to or exercised by Recipient hereunder, to the extent and within the limitations of Section 768.28, Florida Statutes. The foregoing indemnification shall not constitute a waiver of sovereign immunity beyond the limits set forth in Florida Statutes, Section 768.28, nor shall the same be construed to constitute agreement by Recipient to indemnify the Department for the negligent acts or omissions of the Department, its officers, agents, or employees, or for the acts of third parties. Nothing herein shall be construed as consent by Recipient to be sued by third parties in any manner arising out of this Agreement. This indemnification shall survive the termination of this Agreement.

c. Recipient agrees to include the following indemnification in all contracts with contractors, subcontractors, consultants, or subconsultants (each referred to as "Entity" for the purposes of the below indemnification) who perform work in connection with this Agreement:

"To the extent provided by law, [ENTITY] shall indemnify, defend, and hold harmless the [RECIPIENT] and the State of Florida, Department of Transportation, including the Department's officers, agents, and employees, against any actions, claims, or damages arising out of, relating to, or resulting from negligent or wrongful act(s) of [ENTITY], or any of its officers, agents, or employees, acting within the scope of their office or employment, in connection with the rights

granted to or exercised by [ENTITY] hereunder, to the extent and within the limitations of Section 768.28, Florida Statutes.

The foregoing indemnification shall not constitute a waiver of sovereign immunity beyond the limits set forth in Florida Statutes, Section 768.28. Nor shall the same be construed to constitute agreement by [ENTITY] to indemnify [RECIPIENT] for the negligent acts or omissions of [RECIPIENT], its officers, agents, or employees, or third parties. Nor shall the same be construed to constitute agreement by [ENTITY] to indemnify the Department for the negligent acts or omissions of the Department, its officers, agents, or employees, or third parties. This indemnification shall survive the termination of this Agreement."

d. The Recipient shall provide Workers' Compensation Insurance in accordance with Florida's Workers' Compensation law for all employees. If subletting any of the work, ensure that the subcontractor(s) and subconsultants have Workers' Compensation Insurance for their employees in accordance with Florida's Workers' Compensation law. If using "leased employees" or employees obtained through professional employer organizations ("PEO's"), ensure that such employees are covered by Workers' Compensation insurance through the PEO's or other leasing entities. Ensure that any equipment rental agreements that include operators or other personnel who are employees of independent contractors, sole proprietorships or partners are covered by insurance required under Florida's Workers' Compensation law.

e. If the Recipient elects to self-perform the Project, and such self-performance is approved by the Department in accordance with the terms of this Agreement, the Recipient may self-insure and proof of self-insurance shall be provided to the Department. If the Recipient elects to hire a contractor or consultant to perform the Project, then the Recipient shall, or cause its contractor or consultant to carry Commercial General Liability insurance providing continuous coverage for all work or operations performed under the Agreement. Such insurance shall be no more restrictive than that provided by the latest occurrence form edition of the standard Commercial General Liability Coverage Form (ISO Form CG 00 01) as filed for use in the State of Florida. Recipient shall, or cause its contractor to cause the Department to be made an Additional Insured as to such insurance. Such coverage shall be on an "occurrence" basis and shall include Products/Completed Operations coverage. The coverage afforded to the Department as an Additional Insured shall be primary as to any other available insurance and shall not be more restrictive than the coverage afforded to the Named Insured. The limits of coverage shall not be less than $1,000,000 for each occurrence and not less than a $5,000,000 annual general aggregate, inclusive of amounts provided by an umbrella or excess policy. The limits of coverage described herein shall apply fully to the work or operations performed under the Agreement, and may not be shared with or diminished by claims unrelated to the Agreement. The policy/ies and coverage described herein may be subject to a deductible and such deductibles shall be paid by the Named Insured. No policy/ies or coverage described herein may contain or be subject to a Retention or a Self-Insured Retention unless the Recipient is a state agency or subdivision of the State of Florida that elects to self-perform the Project. Prior to the execution of the Agreement, and at all renewal periods which occur prior to final acceptance of the work, the Department shall be provided with an ACORD Certificate of Liability Insurance reflecting the coverage described herein. The Department shall be notified in writing within ten days of any cancellation, notice of cancellation, lapse, renewal, or proposed change to any policy or coverage described herein. The Department's approval or failure to disapprove any policy/ies, coverage, or ACORD Certificates shall not relieve or excuse any obligation to procure and maintain the insurance required herein, nor serve as a waiver of any rights or defenses the Department may have.

f. When the Agreement includes the construction of a railroad grade crossing, railroad overpass or underpass structure, or any other work or operations within the limits of the railroad right-of-way, including any encroachments thereon from work or operations in the vicinity of the railroad right-of-way, the Recipient shall, or cause its contractor to, in addition to the insurance coverage required above, procure and maintain Railroad Protective Liability Coverage (ISO Form CG 00 35) where the railroad is the Named Insured and where the limits are not less than $2,000,000 combined single limit for bodily injury and/or property damage per occurrence, and with an annual aggregate limit of not less than $6,000,000. The railroad shall also be added along with the Department as an Additional Insured on the policy/ies procured pursuant to the paragraph above. Prior to the execution of the Agreement, and at all renewal periods which occur prior to final acceptance of the work, both the Department and the railroad shall be provided with an ACORD Certificate of Liability Insurance reflecting the coverage described herein. The insurance described herein

shall be maintained through final acceptance of the work. Both the Department and the railroad shall be notified in writing within ten days of any cancellation, notice of cancellation, renewal, or proposed change to any policy or coverage described herein. The Department's approval or failure to disapprove any policy/ies, coverage, or ACORD Certificates shall not relieve or excuse any obligation to procure and maintain the insurance required herein, nor serve as a waiver of any rights the Department may have.

g. When the Agreement involves work on or in the vicinity of utility-owned property or facilities, the utility shall be added along with the Department as an Additional Insured on the Commercial General Liability policy/ies procured above.

15. Miscellaneous:

a. In no event shall any payment to the Recipient constitute or be construed as a waiver by the Department of any breach of covenant or any default which may then exist on the part of the Recipient and the making of such payment by the Department, while any such breach or default shall exist, shall in no way impair or prejudice any right or remedy available to the Department with respect to such breach or default.

b. If any provision of this Agreement is held invalid, the remainder of this Agreement shall not be affected. In such an instance, the remainder would then continue to conform to the terms and requirements of applicable law.

c. The Recipient and the Department agree that the Recipient, its employees, contractors, subcontractors, consultants, and subconsultants are not agents of the Department as a result of this Agreement.

d. By execution of the Agreement, the Recipient represents that it has not paid and, also agrees not to pay, any bonus or commission for the purpose of obtaining an approval of its application for the financing hereunder.

e. Nothing in the Agreement shall require the Recipient to observe or enforce compliance with any provision or perform any act or do any other thing in contravention of any applicable state law. If any of the provisions of the Agreement violate any applicable state law, the Recipient will at once notify the Department in writing in order that appropriate changes and modifications may be made by the Department and the Recipient to the end that the Recipient may proceed as soon as possible with the Project.

f. This Agreement may be executed in one or more counterparts, each of which shall be deemed an original, but all of which shall constitute the same Agreement. A facsimile or electronic transmission of this Agreement with a signature on behalf of a party will be legal and binding on such party.

g. The Department reserves the right to unilaterally terminate this Agreement for failure by the Recipient to comply with the provisions of Chapter 119, Florida Statutes.

h. The Recipient agrees to comply with Section 20.055(5), Florida Statutes, and to incorporate in all subcontracts the obligation to comply with Section 20.055(5), Florida Statutes

i. This Agreement shall be governed by and construed in accordance with the laws of the State of Florida. In the event of a conflict between any portion of the contract and Florida law, the laws of Florida shall prevail. The Recipient agrees to waive forum and venue and that the Department shall determine the forum and venue in which any dispute under this Agreement is decided.

j. This Agreement does not involve the purchase of Tangible Personal Property, as defined in Chapter 273, Florida Statutes.

16. Exhibits.

a. **Exhibits A, B, D, and E, and Attachment F** are attached to and incorporated into this Agreement.

b. ☒ The Project will involve construction, therefore, **Exhibit "C"**, Engineer's Certification of Compliance is attached and incorporated into this Agreement.

c. ☒ A portion or all of the Project will utilize the Department's right-of-way and, therefore, **Exhibit F**, **Terms and Conditions of Construction in Department Right-of-Way**, is attached and incorporated into this Agreement.

d. ☐ The following Exhibit(s), in addition to those listed in 16.a. and 16.b., are attached and incorporated into this Agreement: _____

e. Exhibit and Attachment List

Exhibit A: Project Description and Responsibilities
Exhibit B: Schedule of Financial Assistance
*Exhibit C: Engineer's Certification of Compliance
Exhibit D: State Financial Assistance (Florida Single Audit Act)
Exhibit E: Recipient Resolution
*Exhibit F: Terms and Conditions of Construction in Department Right-of-Way
*Exhibit G: Alternative Pay Method

Attachment F – Contract Payment Requirements

*Additional Exhibit(s): _____
*Indicates that the Exhibit is only attached and incorporated if applicable box is selected.

The remainder of this page intentionally left blank.

IN WITNESS WHEREOF, the Parties have executed this Agreement on the day and year written above.

RECIPIENT SUMTER COUNTY

By: "See Attached Signature Page"

Name: _____

Title: _____

STATE OF FLORIDA,
DEPARTMENT OF TRANSPORTATION

By: _____

Name: Loreen C. Bobo, P.E.

Title: Director of Transportation Development

Legal Review:

By: _____

Name: _____

STATE-FUNDED GRANT AGREEMENT
SIGNATURE PAGE
(FPN 436365-1-54-01)

IN WITNESS WHEREOF, the parties have executed this Agreement on the day and year written above.

RECIPIENT SUMTER COUNTY

By: _____
Name: Steve Printz
Title: Chairman

By: _____
Name: Bradley Arnold
Title: County Administrator

EXHIBIT "A"

PROJECT DESCRIPTION AND RESPONSIBILITIES

FPN: 436365-1-54-01

This exhibit forms an integral part of the State-Funded Grant Agreement between the State of Florida, Department of Transportation and

Sumter County (the Recipient)

PROJECT LOCATION:

☐ The project is on the National Highway System.

☒ The project is on the State Highway System.

PROJECT LENGTH AND MILE POST LIMITS: See Description Below.

PROJECT DESCRIPTION:

The Project 436365-1 Sumter County ATMS Phase I is with Sumter County. This project is the first of three phases for the Sumter County Advanced Traffic Management System (ATMS). Phase 1 includes three roadway segments. The length of phase 1 is approximately 4.1 miles (does not include the communications network from the Traffic Management Center [TMC] to each roadway segment). The project limits/segments are (1) County Road 466 (C-466) from US 301 to Buena Vista Boulevard, 2.0 miles, seven signals, (2) C-466A from Powell Road to Buena Vista Boulevard, 1.5 miles, three signals, and (3) C-466A from Morse Boulevard to Farner Place, 0.6 miles, three signals.

Phase 1 Construction will consist of constructing a TMC at the Public Works offices in Bushnell, interconnecting the traffic signals in each roadway segment, and providing a communications system from the TMC to connect with the signals in each roadway segment. The Phase 1 Construction will include intersection upgrades that consists of signal controllers at each intersection, traffic controller cabinet, non-intrusive vehicle Video Detection Systems (VDS), Microwave Vehicle Detection System (MVDS) devices and fiber optic communications equipment as needed. Other ITS equipment will include CCTV cameras, Geographical Information System (GIS) data collection equipment, travel performance monitoring via Bluetooth technology, fiber optic patch panels, managed field Ethernet switches, fiber optic splice vaults, fiber optic cables, pull boxes, underground conduits, associated poles with all ITS equipment, and other transportation improvement technology as needed to provide an operational ATMS. All pedestrian improvements shall be ADA compliant. Existing underground conduits, fiber optic cables and pull boxes are to be reused whenever possible.

All equipment shall be placed within existing County Right of Ways, easements, or within areas bound by legal agreements allowing the maintenance, access, and installation of said equipment.

Coordination with CSX railroad will occur for the signal at US 301 & C-466. All CSX coordination will be the responsibility of the winning bidder. The winning bidder must complete the CSX Contractors Amendment before beginning work on said project. The winning bidder must also complete the CSX OP request using reference number 418190704230323.
No work is to be performed on CSXT property without Roadmaster's authorization. CSX requires at least thirty (30) days of notification to schedule protection services and inspection prior to doing any work on CSX's right-of-way.

To schedule your work:
Please Note** You must schedule your work activity through the CSX Property Portal. This projects CSX contract number is CSX880841. The special reference number to schedule the work is 418190704230323. It is the contractor's responsibility to schedule any work on CSXT property with CSXT Outside Services. The contractor shall include Sumter County staff in all CSX correspondences.

EXHIBIT "A"

PROJECT DESCRIPTION AND RESPONSIBILITIES

SPECIAL CONSIDERATIONS BY RECIPIENT:

Invoices, progress reports and other supporting documentation shall be submitted no more than monthly and no less than quarterly via email to D5-LocalPrograms@dot.state.fl.us.

The Recipient shall commence the project's activities subsequent to the execution of this Agreement and shall perform in accordance with the following schedule:

a) Construction contract to be let (Bid Opening) by 06/18/2020.
b) Construction Duration of 240 days.
c) Construction to be completed (Final Acceptance) by 05/06/2021.

If this schedule cannot be met, the Recipient will notify the Department in writing with a revised schedule or the project is subject to the withdrawal of funding.

SPECIAL CONSIDERATIONS BY DEPARTMENT:

In the event the Project costs exceed the cost included in Exhibit "B", Schedule of Financial Assistance, the RECIPIENT will be solely responsible to provide the additional funds that are necessary to complete the Project.

The project funding may be reduced to an amount equal to the award amount and/or the actual contract costs.

Invoices will be reimbursed at 50% to meet the CIGP funding match requirement.

The remainder of this page intentionally left blank.

STATE-FUNDED GRANT AGREEMENT
EXHIBIT "B"
SCHEDULE OF FINANCIAL ASSISTANCE

RECIPIENT NAME & BILLING ADDRESS:	**FINANCIAL PROJECT NUMBER:**
Sumter County Board of County Commissioners Public Works Division 319 East Anderson Avenue Bushnell, Florida 33513	436365-1-54-01

I. **PHASE OF WORK by Fiscal Year:**	**FY 2019/2020**	**FY**	**FY**	**TOTAL**
Design- Phase 34	$ 0.00	$ 0.00	$ 0.00	$0.00
Maximum Department Participation - (Insert Program Name)	% or $	% or $	% or $	% or $ 0.00
Maximum Department Participation - (Insert Program Name)	% or $	% or $	% or $	% or $ 0.00
Maximum Department Participation - (Insert Program Name)	% or $	% or $	% or $	% or $ 0.00
Local Participation (Any applicable waiver noted in Exhibit "A")	% or $ 0.00	% or $ 0.00	% or $ 0.00	% or $0.00
In-Kind Contribution	$	$	$	$ 0.00
Cash	$	$	$	$ 0.00
Combination In-Kind/Cash	$	$	$	$ 0.00
Right of Way- Phase 44	$ 0.00	$ 0.00	$ 0.00	$0.00
Maximum Department Participation - (Insert Program Name)	% or $	% or $	% or $	% or $ 0.00
Maximum Department Participation - (Insert Program Name)	% or $	% or $	% or $	% or $ 0.00
Maximum Department Participation - (Insert Program Name)	% or $	% or $	% or $	% or $ 0.00
Local Participation (Any applicable waiver noted in Exhibit "A")	% or $ 0.00	% or $ 0.00	% or $ 0.00	% or $0.00
In-Kind Contribution	$	$	$	$ 0.00
Cash	$	$ 0.00	$	$ 0.00
Combination In-Kind/Cash	$	$	$	$ 0.00
Construction/CEI - Phase 54	$ 1,107,778.00	$ 0.00	$ 0.00	$1,107,778.00
Maximum Department Participation - (CIGP)	N/A% or $ 300,000.00	N/A% or $ 0.00	N/A% or $ 0.00	N/A% or $ 300,000.00
Maximum Department Participation - (Insert Program Name)	% or $	% or $	% or $	% or $ 0.00
Maximum Department Participation - (Insert Program Name)	% or $	% or $	% or $	% or $ 0.00
Local Participation (Any applicable waiver noted in Exhibit "A")	N/A% or $ 807,778.00	N/A% or $ 0.00	N/A% or $ 0.00	N/A% or $807,778.00
In-Kind Contribution	$	$	$	$ 0.00
Cash	$ 807,778.00	$ 0.00	$ 0.00	$ 807,778.00
Combination In-Kind/Cash	$	$	$	$ 0.00

STATE-FUNDED GRANT AGREEMENT
EXHIBIT "B"
SCHEDULE OF FINANCIAL ASSISTANCE

Insert Phase and Number (if applicable)	$ 0.00	$ 0.00	$ 0.00	$0.00
Maximum Department Participation - (Insert Program Name)	% or $	% or $	% or $	% or $ 0.00
Maximum Department Participation - (Insert Program Name)	% or $	% or $	% or $	% or $ 0.00
Maximum Department Participation - (Insert Program Name)	% or $	% or $	% or $	% or $ 0.00
Local Participation (Any applicable waiver noted in Exhibit "A")	% or $ 0.00	% or $ 0.00	% or $ 0.00	% or $0.00
In-Kind Contribution	$	$	$	$ 0.00
Cash	$	$	$	$ 0.00
Combination In-Kind/Cash	$	$	$	$ 0.00
II. **TOTAL PROJECT COST:**	$1,107,778.00	$0.00	$0.00	$1,107,778.00

COST ANALYSIS CERTIFICATION AS REQUIRED BY SECTION 216.3475, FLORIDA STATUTES:
I certify that the cost for each line item budget category has been evaluated and determined to be allowable, reasonable, and necessary as required by Section 216.3475, F.S. Documentation is on file evidencing the methodology used and the conclusions reached.

Amir Asgarinik
District Grant Manager Name

Signature Date

EXHIBIT "C"

ENGINEER'S CERTIFICATION OF COMPLIANCE

Engineer's Certification of Compliance. The Recipient shall complete and submit the following Notice of Completion and, if applicable, Engineer's Certification of Compliance to the Department upon completion of the construction phase of the Project.

NOTICE OF COMPLETION

STATE-FUNDED GRANT AGREEMENT
Between
THE STATE OF FLORIDA, DEPARTMENT OF TRANSPORTATION
and SUMTER COUNTY

PROJECT DESCRIPTION: Construction and CEI Services for the Sumter County Advanced Traffic Management System (ATMS) Phase 1.

FPID#: 436365-1-54-01

In accordance with the Terms and Conditions of the State-Funded Grant Agreement, the undersigned provides notification that the work authorized by this Agreement is complete as of _____, 20__.

By: _____

Name: _____

Title: _____

ENGINEER'S CERTIFICATION OF COMPLIANCE

In accordance with the Terms and Conditions of the State-Funded Grant Agreement, the undersigned certifies that all work which originally required certification by a Professional Engineer has been completed in compliance with the Project construction plans and specifications. If any deviations have been made from the approved plans, a list of all deviations, along with an explanation that justifies the reason to accept each deviation, will be attached to this Certification. Also, with submittal of this certification the Recipient shall furnish the Department a set of "as-built" plans certified by the Engineer of Record/CEI.

By: _____, _____ P.E.

SEAL:

Name: _____

Date: _____

EXHIBIT D

STATE FINANCIAL ASSISTANCE (FLORIDA SINGLE AUDIT ACT)

THE STATE RESOURCES AWARDED PURSUANT TO THIS AGREEMENT CONSIST OF THE FOLLOWING:

Awarding Agency: Florida Department of Transportation

State Project Title and CSFA Number:

- ☒ County Incentive Grant Program (CIGP), (CSFA 55.008)
- ☐ Small County Outreach Program (SCOP), (CSFA 55.009)
- ☐ Small County Road Assistance Program (SCRAP), (CSFA 55.016)
- ☐ Transportation Regional Incentive Program (TRIP), (CSFA 55.026)
- ☐ Insert Program Name, Insert CSFA Number

***Award Amount:** $300,000.00

*The state award amount may change with supplemental agreements

Specific project information for CSFA Number is provided at: https://apps.fldfs.com/fsaa/searchCatalog.aspx

COMPLIANCE REQUIREMENTS APPLICABLE TO STATE RESOURCES AWARDED PURSUANT TO THIS AGREEMENT:

State Project Compliance Requirements for CSFA Number are provided at: https://apps.fldfs.com/fsaa/searchCompliance.aspx

The State Projects Compliance Supplement is provided at: https://apps.fldfs.com/fsaa/compliance.aspx

STATE-FUNDED GRANT AGREEMENT

EXHIBIT "E"

RECIPIENT RESOLUTION

The Recipient Resolution, or other official authorization, authorizing entry into this Agreement is attached and incorporated into this Agreement.

RESOLUTION NO 2020-____

A RESOLUTION OF THE BOARD OF COUNTY COMMISSIONERS OF SUMTER COUNTY, FLORIDA, APPROVING THE STATE-FUNDED GRANT AGREEMENT BETWEEN THE STATE OF FLORIDA DEPARTMENT OF TRANSPORTATION AND SUMTER COUNTY BOARD OF COUNTY COMMISSIONERS FOR THE SUMTER COUNTY ADVANCED TRAFFIC MANAGEMENT SYSTEM (ATMS) PROJECT, FPN 436365-1-54-01; AUTHORIZING THE COUNTY ADMINISTRATOR TO EXECUTE SAID AGREEMENT.

WHEREAS, the State of Florida Department of Transportation and Sumter County desire to facilitate the Sumter County Advanced Traffic Management System (ATMS) Project, FPN 436365-1-54-01 and,

WHEREAS, the State of Florida Department of Transportation has requested Sumter County to execute and deliver to the State of Florida Department of Transportation the State-Funded Grant Agreement for the aforementioned project, FPN 436365-1-54-01 and,

NOW, THEREFORE, BE IT RESOLVED by the Board of Sumter Commissioners that the County Administrator is hereby authorized to make, execute, and deliver to the State of Florida Department of Transportation the State-Funded Grant Agreement for the aforementioned project, FPN 436365-1-54-01.

PASSED AND ADOPTED BY THE BOARD OF COUNTY COMMISSIONERS OF SUMTER COUNTY, this 12th day of May 2020.

ATTEST:

_____ _____

Caroline Alrestimawi, Deputy Clerk Steve Printz, Chairman

_____

Bradley Arnold, County Administrator

EXHIBIT "F"

TERMS AND CONDITIONS OF CONSTRUCTION IN DEPARTMENT RIGHT OF WAY

1. **Construction on the Department's Right of Way.** If the Project involves construction on, under, or over the Department's right-of-way, the design work for all portions of the Project to be constructed on, under, or over the Department's right-of-way shall be submitted to the Department for review prior to any work being commenced, and the following provisions shall apply:

   a. The Project shall be designed and constructed in accordance with the latest edition of the Department's Standard Specifications for Road and Bridge Construction and Department Design Standards and Manual of Uniform Traffic Control Devices ("MUTCD"). The following guidelines shall apply as deemed appropriate by the Department: the Department Structures Design Manual, AASHTO Guide Specifications for the Design of Pedestrian Bridges, AASHTO LRFD Bridge Design Specifications, the Department Plans Preparation Manual ("PPM") and the Department Traffic Engineering Manual.

   Designs that do not meet Department standards may be rejected by the Department at its sole discretion. The Department may allocate Department-managed resources to facilitate compliance with applicable design standards. If changes to the Department approved plans are required, the Recipient shall notify the Department of the changes and receive approval from the Department prior to the changes being constructed. The Recipient shall maintain the area of the Project, at all times, and coordinate any work needs of the Department during construction of the Project.

   b. The Recipient shall notify the Department a minimum of 48 hours before beginning construction within, under, or over Department right-of-way. The Recipient shall notify the Department should construction be suspended for more than 5 working days. The Department contact person for construction is D5-ConstructionSpecialProjects@dot.state.fl.us.

   c. The Recipient shall be responsible for monitoring construction operations and the maintenance of traffic ("MOT") throughout the course of the Project in accordance with the latest edition of the Department Standard Specifications, section 102. The Recipient is responsible for the development of a MOT plan and making any changes to that plan as necessary. The MOT plan shall be in accordance with the latest version of the Department Design Standards, Index 600 series. Any MOT plan developed by the Recipient that deviates from the Department Design Standards must be signed and sealed by a professional engineer. MOT plans will require approval by the Department prior to implementation.

   d. The Recipient shall be responsible for locating all existing utilities, both aerial and underground, and for ensuring that all utility locations be accurately documented on the construction plans. All utility conflicts shall be fully resolved directly with the applicable utility.

   e. The Recipient will be responsible for obtaining all permits that may be required by other agencies or local governmental entities.

   f. It is hereby agreed by the Parties that this Agreement creates a permissive use only and all improvements located on, under, or over the Department's right-of-way resulting from this Agreement shall become the property of the Department. Neither the granting of the permission to use the Department right-of-way nor the placing of facilities upon the Department property shall operate to create or vest any property right to or in the Recipient, except as may otherwise be provided in separate agreements. The Recipient shall not acquire any right, title, interest or estate in Department right-of-way, of any nature or kind whatsoever, by virtue of the execution, operation, effect, or performance of this Agreement including, but not limited to, the Recipient's use, occupancy or possession of Department right-of-way. The Parties agree that this Agreement does

EXHIBIT "F"

TERMS AND CONDITIONS OF CONSTRUCTION IN DEPARTMENT RIGHT OF WAY

not, and shall not be construed to, grant credit for any future transportation concurrency requirements pursuant to Chapter 163, Florida Statutes.

g. The Recipient shall not cause any liens or encumbrances to attach to any portion of the Department's property, including but not limited to, the Department's right-of-way.

h. The Recipient shall perform all required testing associated with the design and construction of the Project. Testing results shall be entered into the department's Materials Testing and Certification database application and the department must provide the final Materials Certification for the Project. The Department shall have the right to perform its own independent testing during the course of the Project.

i. The Recipient shall exercise the rights granted herein and shall otherwise perform this Agreement in a good and workmanlike manner, with reasonable care, in accordance with the terms and provisions of this Agreement and all applicable federal, state, local, administrative, regulatory, safety and environmental laws, codes, rules, regulations, policies, procedures, guidelines, standards and permits, as the same may be constituted and amended from time to time, including, but not limited to, those of the Department, applicable Water Management District, Florida Department of Environmental Protection, Environmental Protection Recipient, the Army Corps of Engineers, the United States Coast Guard and local governmental entities.

j. If the Department determines a condition exists which threatens the public's safety, the Department may, at its discretion, cause construction operations to cease and immediately have any potential hazards removed from on, under, or over its right-of-way at the sole cost, expense, and effort of the Recipient. The Recipient shall bear all construction delay costs incurred by the Department.

k. The Recipient shall be responsible to maintain and restore all features that might require relocation within the Department right-of-way.

l. The Recipient will be solely responsible for clean up or restoration required to correct any environmental or health hazards that may result from construction operations.

m. The acceptance procedure will include a final "walk-through" by Recipient and Department personnel. Upon completion of construction, the Recipient will be required to submit to the Department final as-built plans and an engineering certification that construction was completed in accordance to the plans. Submittal of the final as-built plans shall include one complete set of the signed and sealed plans on 11" X 17" plan sheets and an electronic copy prepared in Portable Document Format (PDF). Prior to the termination of this Agreement, the Recipient shall remove its presence, including, but not limited to, all of the Recipient's property, machinery, and equipment from Department right-of-way and shall restore those portions of Department right of way disturbed or otherwise altered by the Project to substantially the same condition that existed immediately prior to the commencement of the Project.

n. If the Department determines that the Project is not completed in accordance with the provisions of this Agreement, the Department shall deliver written notification of such to the Recipient. The Recipient shall have thirty (30) days from the date of receipt of the Department's written notice, or such other time as the Recipient and the Department mutually agree to in writing, to complete the Project and provide the Department with written notice of the same (the "Notice of Completion"). If the Recipient fails to timely deliver the Notice of Completion, or if it is determined that the Project is not properly completed after receipt of the Notice of Completion, the Department, within its

EXHIBIT "F"

TERMS AND CONDITIONS OF CONSTRUCTION IN DEPARTMENT RIGHT OF WAY

discretion may: 1) provide the Recipient with written authorization granting such additional time as the Department deems appropriate to correct the deficiency(ies); or 2) correct the deficiency(ies) at the Recipient 's sole cost and expense, without Department liability to the Recipient for any resulting loss or damage to property, including, but not limited to, machinery and equipment. If the Department elects to correct the deficiency(ies), the Department shall provide the Recipient with an invoice for the costs incurred by the Department and the Recipient shall pay the invoice within thirty (30) days of the date of the invoice.

o. The Recipient shall implement best management practices for erosion and pollution control to prevent violation of state water quality standards. The Recipient shall be responsible for the correction of any erosion, shoaling, or water quality problems that result from the construction of the Project.

p. Portable Traffic Monitoring Site (PTMS) or a Telemetry Traffic Monitoring Site (TTMS) may exist within the vicinity of your proposed work. It is the responsibility of the Recipient to locate and avoid damage to these sites. If a PTMS or TTMS is encountered during construction, the Department must be contacted immediately.

q. During construction, highest priority must be given to pedestrian safety. If permission is granted to temporarily close a sidewalk, it should be done with the express condition that an alternate route will be provided, and shall continuously maintain pedestrian features to meet Americans Disability Act (ADA) standards.

r. Restricted hours of operation will be from N/A, (N/A), unless otherwise approved by the Operations Engineer, or designee.

s. Lane closures on the state road system must be coordinated with the Public Information Office at least two weeks prior to the closure. The contact information for the Department's Public Information Office is:

D5-PIO@dot.state.fl.us

Note: (Highlighted sections indicate need to confirm information with District Office or appropriate DOT person managing the Agreement)

ATTACHMENT F

CONTRACT PAYMENT REQUIREMENTS
Florida Department of Financial Services, Reference Guide for State Expenditures
Cost Reimbursement Contracts

Invoices for cost reimbursement contracts must be supported by an itemized listing of expenditures by category (salary, travel, expenses, etc.). Supporting documentation shall be submitted for each amount for which reimbursement is being claimed indicating that the item has been paid. Documentation for each amount for which reimbursement is being claimed must indicate that the item has been paid. Check numbers may be provided in lieu of copies of actual checks. Each piece of documentation should clearly reflect the dates of service. Only expenditures for categories in the approved agreement budget may be reimbursed. These expenditures must be allowable (pursuant to law) and directly related to the services being provided.

Listed below are types and examples of supporting documentation for cost reimbursement agreements:

(1) Salaries: A payroll register or similar documentation should be submitted. The payroll register should show gross salary charges, fringe benefits, other deductions and net pay. If an individual for whom reimbursement is being claimed is paid by the hour, a document reflecting the hours worked times the rate of pay will be acceptable.

(2) Fringe Benefits: Fringe Benefits should be supported by invoices showing the amount paid on behalf of the employee (e.g., insurance premiums paid). If the contract specifically states that fringe benefits will be based on a specified percentage rather than the actual cost of fringe benefits, then the calculation for the fringe benefits amount must be shown.

Exception: Governmental entities are not required to provide check numbers or copies of checks for fringe benefits.

(3) Travel: Reimbursement for travel must be in accordance with Section 112.061, Florida Statutes, which includes submission of the claim on the approved State travel voucher or electronic means.

(4) Other direct costs: Reimbursement will be made based on paid invoices/receipts. If nonexpendable property is purchased using State funds, the contract should include a provision for the transfer of the property to the State when services are terminated. Documentation must be provided to show compliance with Department of Management Services Rule 60A-1.017, Florida Administrative Code, regarding the requirements for contracts which include services and that provide for the contractor to purchase tangible personal property as defined in Section 273.02, Florida Statutes, for subsequent transfer to the State.

(5) In-house charges:Charges which may be of an internal nature (e.g., postage, copies, etc.) may be reimbursed on a usage log which shows the units times the rate being charged. The rates must be reasonable.

(6) Indirect costs:If the contract specifies that indirect costs will be paid based on a specified rate, then the calculation should be shown.

Contracts between state agencies, and or contracts between universities may submit alternative documentation to substantiate the reimbursement request that may be in the form of FLAIR reports or other detailed reports.

The Florida Department of Financial Services, online Reference Guide for State Expenditures can be found at this web address:
https://www.myfloridacfo.com/Division/AA/Manuals/Auditing/Reference_Guide_For_State_Expenditures.pdf

SUMTER COUNTY BOARD OF COUNTY COMMISSIONERS
EXECUTIVE SUMMARY

SUBJECT: **Sumter County C-478 Widening Project from US 301 to SR 471 Asphalt and Geotechnical Inspection Services with Central Testing Laboratory**

REQUESTED ACTION: **Staff Recommends Approval**

Meeting Type: **Regular Meeting** **DATE OF MEETING:** **5/12/2020**

CONTRACT: ☐ N/A Vendor/Entity: **Central Testing Laboratory**

Effective Date: **2/14/2017** Termination Date: **2/13/2021**

Managing Division / Dept: **Engineering**

BUDGET IMPACT: **$49,980.00**

FUNDING SOURCE: **Secondary Trust Fund**

Type: Capital **EXPENDITURE ACCOUNT:** **106-340-541-6345**

HISTORY/FACTS/ISSUES:

On January 28, 2020, the Sumter County Board of County Commissioners (BOCC) entered into Extension Agreement #3 with Central Testing Laboratory, Inc. for RFQ 040-0-2016/RS Sumter County Geotechnical and Materials Testing Services. Consistent with Extension Agreement #3, Public Works wishes to include certain material testing services for the C-478 Widening Project between US 301 and SR 471 (ITB 012-0-2020/RS).

Services will include Standard and Modified Proctors, Sieve Analysis, Organic Content Tests, Limerock Bearing Ratio (LBR), Asphalt extraction, and Gradation Tests, etc.

Attached: Sumter County Geotechnical and Materials Testing Services Professional Services Agreement and Extension Agreement #3.

Prepared by: **Steven Cohoon** **Grammarly Check** ☒

November 21, 2019 **(Revised May 4, 2020)**

Sumter County Board of County Commissioners
Public Works Department
319 E. Anderson Avenue
Bushnell, FL 33513
(352)689-4400

Attention: Shailesh Patel
Shailesh.patel@sumtercountyfl.gov

Subject: Proposal for Materials Testing Services
C-478 Resurfacing from US 301 to SR 471
FIN No. 434403-1-54-01
ITB # 004-0-2020/RS
Sumter County, Florida
CTL Proposal No. 1930089.**101**

Dear Mr. Patel

Central Testing Laboratory, Inc. (CTL) is pleased to submit this proposal on the above referenced project to provide Materials Testing Services. This proposal is based on estimated quantities for asphalt testing in accordance with plans and Standard Specifications.

CTL's inspectors and technicians are certified in earthwork, concrete, and asphalt through organizations such as the Florida Department of Transportation (FDOT), Construction Training Qualification Program (CTQP), the American Concrete Institute (ACI), and the Construction Materials Engineering Council (CMEC). Our laboratory facilities are pre-qualified by the FDOT for providing Quality Control Inspection and Testing. The technicians are familiar with local codes and FDOT standard specifications. All technicians operate under a QC Manager and are under direction of a licensed Professional Engineer registered in the State of Florida.

Unit Fee Schedule

It is proposed that the cost of providing these services be determined on a unit price basis shown on our annual fee schedule with Sumter County contract no. 040-0-2016/RS.

Based on a review of the construction plans and specifications, CTL has prepared a proposed budgetary estimate for this project. This estimate may fluctuate up or down, depending on the contractor's methodology of construction.

This document shall not be reproduced, except in full, without prior written approval of Central Testing Laboratory, Inc.

Cost of Services

Based on the estimated quantities, the total cost for providing these services for the C-478 Resurfacing from US 301 to SR 471 Project are estimated at $49,980.00 (please see Attachment "A").

* Cost for additional services such as, but not limited to full time inspection technicians or miscellaneous sampling and testing may be included by issuance of a separate purchase order.

Closure

Central Testing Laboratory strives to work one on one with our clients to see that our projects run as smoothly as possible. Central Testing Laboratory appreciates this opportunity to submit our qualifications for the Quality Control Services for your project and is very excited about this opportunity to work with you.

If you have questions regarding this submittal, please do not hesitate to contact us at our Leesburg office at (352) 787-1268 or by email at mdavis@ctlfl.com.

Respectively submitted,
Central Testing Laboratory, Inc.

Michael C. Davis
Vice President

MCD/slk

Attachment: Project Fee Schedule

ATTACHMENT "A"
PROJECT FEE SCHEDULE
Sumter County Public Works
C-478 Resurfacing from US 301 to SR 471
ITB # 004-0-2020/RS
FIN No. 434403-1-54-01
Sumter County

CTL Proposal No. 1930089.101

Proposal for Materials Testing Services	No.	Unit Meas.	Unit Price	Extended Total
Standard or Modified Proctors	4	EA	$ 90.00	$ 360.00
Sieve Analysis	4	EA	$ 60.00	$ 240.00
Atterberg Limits Test	58	EA	$ 75.00	$ 4,350.00
Organic Content	58	EA	$ 40.00	$ 2,320.00
Field Density Limerock (minimum of 3 tests per trip)	200	EA	$ 22.00	$ 4,400.00
Limerock Bearing Ratio (LBR)	54	EA	$ 300.00	$ 16,200.00
Asphalt Extraction & Gradation tests	40	EA	$ 160.00	$ 6,400.00
Asphalt Thickness & Density	150	EA	$ 35.00	$ 5,250.00
Field Technician Level II	45	HR	$ 55.00	$ 2,475.00
Specialty Senior Technician	71	HR	$ 75.00	$ 5,325.00
Staff Engineer (QCM, Density Log Book)	28	HR	$ 95.00	$ 2,660.00
Total Estimate				**$ 49,980.00**

*Any additional testing needed outside this proposed scope of services will be billed at our current fee schedule.

SUMTER COUNTY BOARD OF COUNTY COMMISSIONERS
EXECUTIVE SUMMARY

SUBJECT: Extension Agreement #3 for Sumter County Geotechnical and Materials Testing Services RFQ 040-0-2016/RS (Staff Recommends Approval).

REQUESTED ACTION: **Staff Recommends Approval**

Meeting Type: Regular Meeting **DATE OF MEETING:** **1/28/2020**

CONTRACT: ☒ N/A Vendor/Entity: Central Testing Laboratory, Inc.

Effective Date: 2/14/2017 Termination Date: 2/13/2021

Managing Division / Dept: **Road & Bridge / Public Works**

BUDGET IMPACT: Varies depending on project.

FUNDING SOURCE: **Varies**

Type: Annual **EXPENDITURE ACCOUNT:** **Varies**

HISTORY/FACTS/ISSUES:

On February 14, 2017, the Sumter County Board of County Commissioners (BOCC) entered into an agreement with Central Testing Laboratory, Inc. for RFQ 040-0-2016/RS Sumter County Geotechnical and Materials Testing Services. Extension Agreement #1 was approved by the BOCC on January 8, 2019 to extend the agreement through February 13, 2019. Extension Agreement #2 was approved by the BOCC on January 22, 2019 to extend the agreement through February 13, 2021.

At this time, Public Works wishes to renew the agreement to February 13, 2021. There are no renewals left on this agreement.

Attached for BOCC review are the original Sumter County Geotechnical and Materials Testing Services Professional Services Agreement and the Extension Agreement #3.

APPROVED

January 28, 2020

Board of County Commissioners
Sumter County, Florida

7375 Powell Road, Suite 200 • Wildwood, FL 34785 • Phone (352) 689-4400 • FAX: (352) 689-4401
Website: http://sumtercountyfl.gov

January 30, 2020

Central Testing Laboratory
130 Satellite Court
Leesburg, FL 34748

To Whom It May Concern:

Enclosed for signature are two originals of the Agreement for Real Estate Broker Services between Sumter County and Central Testing Laboratory, approved by the Board of Sumter County Commissioners on January 28, 2020. Please sign both copies and return one of each set to the Clerk of Court in the envelope provided.

If there are any questions, please do not hesitate to contact our office at (352) 569-6629.

Very truly yours,

BOARD OF SUMTER COUNTY COMMISSIONERS

GLORIA R. HAYWARD
CLERK & AUDITOR

By Caroline Al Restimawi
Caroline Al Restimawi
Deputy Clerk

Enclosures

Al Butler, Dist 1
2nd Vice Chairman
(352) 689-4400
7375 Powell Road
Wildwood, FL 34785

Doug Gilpin, Dist 2
(352) 689-4400
7375 Powell Road
Wildwood, FL 34785

Don Burgess, Dist 3
(352) 689-4400
7375 Powell Road
Wildwood, FL 34785

Garry Breeden, Dist 4
Vice Chairman
(352) 689-4400
7375 Powell Road
Wildwood, FL 34785

Steve Printz, Dist 5
Chairman
(352) 689-4400
7375 Powell Road
Wildwood, FL 34785

Bradley S. Arnold,
County Administrator
(352) 689-4400
7375 Powell Road
Wildwood, FL 34785

Gloria R. Hayward, Clerk & Auditor
(352) 569-6600
215 East McCollum Avenue
Bushnell, FL 33513

County Attorney
The Hogan Law Firm
Post Office Box 485
Brooksville, Florida 34605

Extension Agreement #3

Sumter County Geotechnical and Materials Testing Services

This agreement extension is made and entered into this 28th day of January 2020, between the Board of County Commissioners of Sumter County Florida, 7375 Powell Road, Wildwood, Florida 34785 (County) and Central Testing Laboratory, 130 Satellite Court, Leesburg, Florida 34748 (Firm).

WHEREAS, the parties executed an original agreement dated February 14, 2017 for RFQ 040-0-2016/RS Sumter County Geotechnical and Materials Testing Services;

WHEREAS, the County wishes to extend the agreement through February 13, 2021 under the same terms and conditions.

NOW, THEREFORE, the parties agree as follows:

1. That the certain agreement between the parties originally dated February 14, 2017, is hereby extended to February 13, 2021.
2. Firm shall, at all times, comply with the Florida Public Records Law, the Florida Open Meeting Law and all other applicable laws, rules and regulations of the State of Florida.
3. **IF THE FIRM HAS QUESTIONS REGARDING THE APPLICATION OF CHAPTER 119, FLORIDA STATUTES, TO THE FIRMS' DUTY TO PROVIDE PUBLIC RECORDS RELATING TO THIS AGREEMENT, CONTACT THE CUSTODIAN OF PUBLIC RECORDS AT 352-689-4400, Sumter County Board of County Commissioners, 7375 Powell Road, Wildwood, Florida 34785 or via email at Administrative.Services@sumtercountyfl.gov.**
4. Except as expressly modified by this Extension Agreement, all other terms and conditions of the original Agreement remain in full force and effect for the term of the Agreement.

THIS AGREEMENT is executed the day and year first written above.

BOARD OF COUNTY COMMISSIONERS SUMTER COUNTY FLORIDA SEAL

Attest: Deputy Clerk

BOARD OF COUNTY COMMISSIONERS, SUMTER COUNTY, FLORIDA

By: _____

Chairman

Date Signed: 1/28/2020

Date Signed: 1/28/2020

Central Testing Laboratory, Inc.

By: _____

Witness: Tracy Bryan

Date Signed: 2/4/2020

Date Signed: 2/4/2020

SUMTER COUNTY BOARD OF COUNTY COMMISSIONERS
EXECUTIVE SUMMARY

SUBJECT: Extension Agreement #2 for Sumter County Geotechnical and Materials Testing Services RFQ 040-0-2016/RS (Staff Recommends Approval).

REQUESTED ACTION: **Staff Recommends Approval**

Meeting Type: Regular Meeting **DATE OF MEETING:** **1/22/2019**

CONTRACT: ☒ N/A Vendor/Entity: Central Testing Laboratory, Inc.

Effective Date: 2/14/2017 Termination Date: 2/13/2020

Managing Division / Dept: **Road & Bridge / Public Works**

BUDGET IMPACT: Varies depending on project.

FUNDING SOURCE: **Varies**

Type: Annual **EXPENDITURE ACCOUNT:** **Varies**

HISTORY/FACTS/ISSUES:

On February 14, 2017, the Sumter County Board of County Commissioners (BOCC) entered into an agreement with Central Testing Laboratory, Inc. for RFQ 040-0-2016/RS Sumter County Geotechnical and Materials Testing Services. Extension Agreement #1 was approved by the BOCC on January 8, 2019 to extend the agreement through February 13, 2019.

At this time, Public Works wishes to renew the agreement to February 13, 2020. There will be one additional one-year renewal left on this agreement.

Attached for BOCC review are the original Sumter County Geotechnical and Materials Testing Services Professional Services Agreement and the Extension Agreement #2.

Prepared by: **Becky Segrest** **Grammarly Check** ☒

Mailed agreement 1/28/19

APPROVED

Board of County Commissioners
Sumter County, Florida

7375 Powell Road, Suite 200 • Wildwood, FL 34785 • Phone (352) 689-4400 • FAX: (352) 689-4401
Website: http://sumtercountyfl.gov

January 28, 2019

Central Testing Laboratory
130 Satellite Court
Leesburg, FL 34748

To whom it may concern:

Enclosed for your record, please find two originals of Extension Agreement #2 , for Geotechnical and Materials Testing Services, between Central Testing Laboratory and The Sumter County Board of County Commissioners, approved at their January 22, 2019 meeting.

Please sign both documents, keep one for your records and return one in the envelope provided.

If you have any questions, I can be reached by phone at 352-569-6612, or, by email at melliott@sumterclerk.com.

Sincerely,

Melissa Elliott
Deputy Clerk
Sumter County Finance
PO Box 247
Bushnell, FL 33513

Al Butler, Dist 1
(352) 689-4400
7375 Powell Road
Wildwood, FL 34785

Don Burgess, Dist 3
Chairman
(352) 689-4400
7375 Powell Road
Wildwood, FL 34785

Steve Printz, Dist 5
Vice Chairman
(352) 689-4400
7375 Powell Road
Wildwood, FL 34785

Doug Gilpin, Dist 2
(352) 689-4400
7375 Powell Road
Wildwood, FL 34785

Garry Breeden, Dist 4
Second Vice Chairman
(352) 689-4400
7375 Powell Road
Wildwood, FL 34785

Bradley S. Arnold,
County Administrator
(352) 689-4400
7375 Powell Road
Wildwood, FL 34785

Gloria R. Hayward, Clerk & Auditor
(352) 569-6600
215 East McCollum Avenue
Bushnell, FL 33513

County Attorney
The Hogan Law Firm
Post Office Box 485
Brooksville, Florida 34605

Extension Agreement #2

Sumter County Geotechnical and Materials Testing Services

This agreement extension is made and entered into this 22nd day of January 2019, between the Board of County Commissioners of Sumter County Florida, 7375 Powell Road, Wildwood, Florida 34785 (County) and Central Testing Laboratory, 130 Satellite Court, Leesburg, Florida 34748 (Firm).

WHEREAS, the parties executed an original agreement dated February 14, 2017 for RFQ 040-0-2016/RS Sumter County Geotechnical and Materials Testing Services;

WHEREAS, the County wishes to extend the agreement through February 13, 2020 under the same terms and conditions.

NOW, THEREFORE, the parties agree as follows:

1. That the certain agreement between the parties originally dated February 14, 2017, is hereby extended to February 13, 2020.
2. Firm shall, at all times, comply with the Florida Public Records Law, the Florida Open Meeting Law and all other applicable laws, rules and regulations of the State of Florida.
3. **IF THE FIRM HAS QUESTIONS REGARDING THE APPLICATION OF CHAPTER 119, FLORIDA STATUTES, TO THE FIRMS' DUTY TO PROVIDE PUBLIC RECORDS RELATING TO THIS AGREEMENT, CONTACT THE CUSTODIAN OF PUBLIC RECORDS AT 352-689-4400, Sumter County Board of County Commissioners, 7375 Powell Road, Wildwood, Florida 34785 or via email at Administrative.Services@sumtercountyfl.gov.**

THIS AGREEMENT is executed the day and year first written above.

Attest: Deputy Clerk

Date Signed: 1/22/19

BOARD OF COUNTY COMMISSIONERS,
SUMTER COUNTY, FLORIDA
By: _____
Chairman

Date Signed: 1/22/19

Central Testing Laboratory, Inc.
By: _____

Witness: Tracey Bryan

Date Signed: 1/31/19

Date Signed: 1/31/19

SUMTER COUNTY BOARD OF COUNTY COMMISSIONERS
EXECUTIVE SUMMARY

SUBJECT: Award and Enter into Contract with Central Testing Laboratory, Inc. for RFQ 040-0-2016/RS Sumter County Geotechnical and Materials Testing Services (Staff Recommends Approval).

REQUESTED ACTION: **Staff Recommends Approval**

Meeting Type: Regular Meeting **DATE OF MEETING:** **2/14/2017**

CONTRACT: ☐ N/A Vendor/Entity: Central Testing Laboratory, Inc.

Effective Date: 2/14/2017 Termination Date: 2/13/2018

Managing Division / Dept: **Engineering / Public Works**

BUDGET IMPACT: $20,000.00

FUNDING SOURCE: Secondary Trust

Type: Annual **EXPENDITURE ACCOUNT:** **106-340-541-6599**

HISTORY/FACTS/ISSUES:

RFQ 040-0-2016/RS Sumter County Geotechnical and Materials Testing was broadcasted on 11/3/2016. Qualifications were due on 1/11/2017 at 10:30 a.m. and opened at 10:35 a.m. in Room 110 of The Villages Sumter County Service Center, 7375 Powell Road, Wildwood, FL 34785. The Selection Committee met on 1/13/2017 to score the RFQ submittals. It was decided that, due to the top three scores, vendor presentations would be conducted on Thursday, 1/17/2017 for the top three scoring RFQ submittals. Based on the scoring results, the Selection Committee agreed to recommend to the Sumter County Board of County Commissioners to enter into contract negotiations with Central Testing Laboratory, Inc. (CTL).

Contract negotiations, that include geotechnical testing, field materials testing, laboratory testing, geophysical survey capabilities, and engineering analysis, were completed with CTL. Attached for award and execution by the BOCC is the negotiated contract with CTL.

Prepared by: **Robert Lawler III** **Grammarly Check** ☒

The Villages
DAILY SUN

Published Daily
Lady Lake, Florida
State of Florida
County Of Lake

Before the undersigned authority personally appeared **Sheryl Dufour** who on oath says that she is Legal Ad Coordinator of the DAILY SUN, a daily newspaper published at Lady Lake in Lake County, Florida with circulation in Lake, Sumter and Marion Counties; that the attached copy of advertisement, being a **Legal Ad #711424** in the matter of **REQUEST FOR QUALIFICATIONS,** was published in said newspaper in the issues of

NOVEMBER 23, 2016

Affiant further says that the said Daily Sun is a newspaper published at Lady Lake in said Lake County, Florida, and that the said newspaper has heretofore been continuously published in said Lake County, Florida each week and has been entered as second class mail matter at the post office in Lady Lake, in said Lake County, Florida, for a period of one year next preceding the first publication of the attached copy of advertisements; and affiant further says that he has neither paid nor promised any person, firm, or Corporation any discount, rebate, commission or refund for the purpose of securing this advertisement for publication in the said newspaper.

Sheryl Dufour
(Signature Of Affiant)

Sworn to and subscribed before me this 25 day November 2016

Robin L. Baldeschwieler
Robin Louise Baldeschwieler, Notary

Personally Known X or
Production Identification
Type of Identification Produced

Attach Notice Here

ROBIN L. BALDESCHWIELER
MY COMMISSION # GG 026382
EXPIRES: October 10, 2020
Bonded Thru Notary Public Underwriters

REQUEST FOR QUALIFICATIONS (RFQ)

Notice is hereby given that the Sumter County Board of County Commissioners (BOCC) will receive qualification packages for the following: "RFQ 040-0-2016/RS Sumter County Geotechnical and Materials Testing Services".

Information is available upon request by calling (352) 689-4400, by coming to the Purchasing Division located at The Villages Sumter County Service Center, 7375 Powell Road, Wildwood, FL 34785, or by contacting Demand Star at 1-800-711-1712 or www.DemandStar.com.

All inquiries and questions regarding this request for qualifications must be made only to the contact identified below and shall be made in writing by fax, e-mail, or mail:

Mrs. Becky Segrest,
Assistant Purchasing Agent
Mailing Address:
7375 Powell Road, Suite 200
Wildwood, FL 34785
E-mail: Becky.Segrest@sumtercountyfl.gov
Fax: (352) 689-4401

The deadline for submission of questions relating to the RFQ shall be December 7, 2016 by 5:00 p.m. A copy of the RFQ must be obtained in order to view the items being requested by BOCC.

All RFQ packages are due by 10:30 a.m. on January 11, 2017 to the address listed above. Late submittals will be rejected and returned unopened to the Proposer. RFQ packages must be firmly sealed in packaging that is clearly marked on the outside: "RFQ 040-0-2016/RS Sumter County Geotechnical and Materials Testing Services". Sealed RFQs must be mailed or delivered to Mrs. Becky Segrest at the above address.

Upon submission, all RFQ packages will become the property of the BOCC, who has the right to use any or all ideas presented in any packages submitted in response to this RFQ, whether or not the RFQ is accepted. Qualification packages will be opened at 10:35 a.m. on January 11, 2017 in Room 110 of The Villages Sumter County Service Center, Wildwood, FL 34785.

The Selection Committee shall meet on January 13, 2017 at 11:30 a.m. in Room 110 of The Villages Sumter County Service Center to review and discuss the qualification packages.

If necessary, vendor presentations will be held on January 17, 2017 starting at 9:00 a.m. in Room 208 of The Villages Sumter County Service Center.

The Selection Committee's recommendation will be presented to the BOCC on February 14, 2017.

SUMTER COUNTY BOARD OF COUNTY COMMISSIONERS
SUMTER COUNTY, FLORIDA
#711424 11/23/2016

Board of County Commissioners
Sumter County, Florida

7375 Powell Road, Suite 200 • Wildwood, FL 34785 • Phone (352) 689-4400 • FAX: (352) 689-4401
Website: http://sumtercountyfl.gov

February 15, 2017

Theodore J. Strouse, P.E.
Central Testing Laboratory, Inc.
130 Satellite Court
Leesburg, Florida 34748

Dear Mr. Strouse:

Enclosed for your signature are two (2) originals of the Sumter County Geotechnical and Materials Testing Services Professional Services Agreement approved by the Board of Sumter County Commissioners on February 14, 2017. Please have both copies signed and return one (1) in the envelope provided.

Thank you for your assistance in this matter. If there are any questions, please do not hesitate to contact our office at (352) 569-6629.

Very truly yours,

BOARD OF SUMTER COUNTY COMMISSIONERS

GLORIA R. HAYWARD
CLERK & AUDITOR

By Caroline Al Restimawi
Caroline Al Restimawi
Deputy Clerk

Enclosures

Al Butler, Dist 1
Vice Chairman
(352) 689-4400
7375 Powell Road
Wildwood, FL 34785

Doug Gilpin, Dist 2
Chairman
(352) 689-4400
7375 Powell Road
Wildwood, FL 34785

Don Burgess, Dist 3
Second Vice Chairman
(352) 689-4400
7375 Powell Road
Wildwood, FL 34785

Garry Breaden, Dist 4
(352) 689-4400
7375 Powell Road
Wildwood, FL 34785

Steve Printz, Dist 5
(352) 689-4400
7375 Powell Road
Wildwood, FL 34785

Bradley S Arnold,
County Administrator
(352) 689-4400
7375 Powell Road
Wildwood, FL 34785

Gloria R Hayward, Clerk & Auditor
(352) 569-6600
215 East McCollum Avenue
Bushnell, FL 33513

County Attorney
The Hogan Law Firm
Post Office Box 485
Brooksville, Florida 34605

SUMTER COUNTY GEOTECHNICAL AND MATERIALS TESTING SERVICES PROFESSIONAL SERVICES AGREEMENT

THIS AGREEMENT is made this 14th day of February, 2017, by and between **Board of Sumter County Commissioners** (hereafter referred to as "Board"), whose address is 7375 Powell Road, Wildwood, Florida 34785, and **Central Testing Laboratory, Inc.** (hereafter referred to as "Firm"), whose address is 130 Satellite Court, Leesburg, Florida 34748.

RECITALS

WHEREAS, the Board has need of professional services for traffic count data collection, data reduction, mapping and summary reporting for various roads throughout Sumter County and;

WHEREAS, the parties desire to enter into a written agreement outlining the duties, responsibilities and compensation of Firm, based on the Firm's response to RFQ 040-0-2016/RS Sumter County Geotechnical and Materials Testing Services;

NOW, THEREFORE, in consideration of the mutual covenants and agreements contained herein, it is hereby agreed as follows:

1. The relationship of the Firm to the Board will be that of a professional Firm and the Firm will provide the professional and technical services required under this agreement in accordance with acceptable professional practices and ethical standards applicable to Firm's profession, and Firm will endeavor to provide to the Board prompt and efficient consulting services to the best of its ability.

2. Firm is hereby retained and employed as a professional consultant; and will work with the Board to provide said services in accordance with the scope of work outlined in RFQ 040-0-2016/RS.

3. Firm agrees to prepare and complete a report to the Board, detailing the status of services provided pursuant to this Agreement at least ninety (90) days prior to the expiration of the term of this Agreement, or at least ninety (90) days prior to the expiration of any renewal term of this Agreement. Firm may be asked to present the deliverables in person for review by staff or for discussion at a scheduled Board meeting.

4. The term of this Agreement shall commence on the day and year as shown above and continue in full force through February 13, 2018, unless otherwise terminated as provided in paragraph five (5) of this Agreement. This Agreement may be renewed on an annual basis for three additional consecutive one-year periods, if agreed to in writing by both parties, at least sixty (60) days prior to the expiration of this Agreement, including any periods of renewal. The term of this Agreement does not relieve the Firm of any future responsibility as described in paragraph eight (8) of this Agreement.

5. This Agreement may be terminated by either party upon thirty (30) days prior written notice to the other party at the address designated in this Agreement for receiving such notice. If this agreement is terminated, Firm shall be authorized to receive payment for all work performed up to the date of termination.

6. With regard to compensation paid to Firm, Firm shall furnish to the Board on a monthly basis an itemized invoice detailing all of Firms hours, services, expenses, and any other services utilized by the Board during the preceding month. Invoice shall be itemized pursuant to and in accordance with the attached Fee Schedule. Firm shall compute the total amount due for the preceding month and all amounts due Firm shall be paid on a monthly basis pursuant to the provisions of the Local Government Prompt Payment Act, F.S. 218. Firm acknowledges and agrees that the rates set forth in the Fee Schedule shall remain fixed throughout the duration of the Agreement and thereafter shall only be adjusted by mutual written agreement of both parties.

7. General Considerations.

a. All reports, drawings, designs, specifications, notebooks, computations, details, and calculation documents prepared by Firm and presented to the Board pursuant to this Agreement are and remain the property of the Board as instruments of service.
b. All analyses, data, documents, models, modeling, reports and tests performed or utilized by Firm shall be made available to the Board upon request and shall be considered public records.
c. Firm shall keep all books, records, files, drawings, plans and other documentation, including all electronically stored items, which concern or relate to the services required hereunder, for a minimum of three (3) years from the date of expiration or termination of this Agreement, or as otherwise required by any applicable law, whichever date is later. The Board shall have the right to order, inspect, and copy all such Records as often as it deems necessary during any such period-of-time. The right to audit, inspect, and copy records shall include all of the records of sub-Firms (if any).
d. Firm shall, at all times, comply with the Florida Public Records Law, the Florida Open Meeting Law and all other applicable laws, rules and regulations of the State of Florida.
e. If the Firm has questions regarding the application of Chapter 119, Florida Statutes, to the firms' duty to provide public records relating to this agreement, contact the custodian of public records at 352-689-4400, Sumter County Board of County Commissioners, 7375 Powell Road, Wildwood, Florida 34785 or via email at Administrative.Services@sumtercountyfl.gov.
f. Firm shall, at all times, carry Professional Liability, General Liability, Automobile and Worker's Compensation Insurance pursuant to the insurance requirements in RFQ 040-0-2016/RS, naming Board as an additional insured in each such policy.
g. Upon Firm's written request, the Board will furnish, or cause to be furnished, such reports, studies, instruments, documents, and other information as Firm and Board mutually deem necessary, and Firm may rely upon same in performing the services required under this agreement.
h. The Board and Firm each binds itself and its successors, legal representatives and assigns to the other party to this agreement and to the partners, successors, legal representatives and assigns of such other party to this agreement, in respect to all covenants of this agreement; and neither the Board nor Firm shall assign or transfer their interest in this agreement without the prior written consent of the other party.

8. Should any other professional services be called for by the Board, which are not otherwise set forth in this Agreement or any of its attachments or exhibits, said charges shall be

agreed upon in advance by the parties hereto. The Firm may be required to provide additional services to the Board on challenges, public protests, administrative hearings, or similar matters. The Firm shall be available to represent the Board, serve as an expert witness, and provide supporting documentation as necessary.

9. The Contract Documents, which comprise the entire Contract between Board and Firm and which are further incorporated herein by reference, consist of the following:

a. Request for Qualifications (RFQ)
b. Vendor's RFQ Documents
c. Permits / Licenses
d. All RFQ Addenda Issued Prior to RFQ Opening Date
e. All Modifications and Change Orders Issued

10. Firm does hereby specifically promise and agree to "hold harmless", defend and indemnify the Board and the agents, servants, employees, officers, and officials thereof from and against any and all liability or responsibility for damage to property or person that may arise in connection with the services to be provided hereunder, including payment of all reasonable attorney's fees, costs and expenses associated with the same.

11. Firm, its agents, servants or employees shall, in no manner, whatsoever be construed as the employees, agents, servants or representatives of the Board and shall have not expressed or implied power or authority to act in any manner whatsoever for or on behalf of the Board, except as provided in the scope of services called for herein. Firm is hereby designated as an independent contractor to the Board and none of the employees, agents or servants of the Firm shall have, or be entitled to, any of the fringe benefits applicable to employees of the Board.

12. In the event of default by either party hereto, the defaulting party shall be liable for all costs and expenses, including reasonable attorney's fees and costs incurred by the other party in enforcing its rights hereunder, whether litigation be instituted or not, at the trial court and appellate court level.

13. Firm does hereby waive any and all "venue privilege" and or "diversity of citizenship privileges" and specifically agrees that any action brought for the enforcement, construction or interpretation of this agreement shall be maintained in the County or Circuit Court in and for Sumter County, Florida, and Firm hereby specifically waives its right or privilege to institute any action of any kind or nature whatsoever, against the Board in any other State Court, Federal Court or administrative tribunal.

14. This Agreement represents the entire and integrated agreement between the parties and supersedes all prior negotiations, representations, or agreements, either written or verbal. If any provision of this Agreement is declared to be invalid or unenforceable, the remainder shall continue to operate in full force and effect.

15. This Agreement cannot be changed or modified, unless by written agreement signed by all parties hereto.

16. In performing services hereunder, Firm shall comply with all federal, state, and local laws and regulations. Firm shall be responsible for identifying and obtaining all permits necessary to complete the scope of services. Firm shall be responsible for obtaining, at its sole cost and expense, all necessary licenses and other governmental approvals required in order for Firm to provide the type of services required hereunder.

17. Firm shall notify Board in writing of any commitments during the term of this Agreement, which may constitute a potential or actual conflict of interest with respect to the scope of services to be performed for the Board.

18. Each of the WHEREAS clauses listed above are hereby re-alleged and incorporated into this Agreement as if otherwise fully stated herein.

19. Any notices required by this Agreement shall be mailed to the following individual(s), by Certified Mail, Return Receipt requested:

FOR THE BOARD	FOR THE FIRM
Name: Bradley S. Arnold	Name:
Address: 7375 Powell Road, Wildwood, FL 34785	Address:
Title: County Administrator	Title:
Date: FEB 14 2017	Date:

IN WITNESS WHEREOF, the parties have signed this agreement the day and year first above written.

ATTEST:

By: Caroline Alrestimawi

CAROLINE ALRESTIMAWI

SUMTER COUNTY
BOARD OF COUNTY COMMISSIONERS

By: DOUG GILPIN, Chairman

Date Signed: FEB 14 2017

ATTEST:

By: Tracy M Bryan

Firm

By: Theodore J. Strouse

Date Signed: 2/21/17

2017
SUMTER COUNTY RFQ# 040-0-2016/RS
GEOTECHNICAL FEE SCHEDULE

1.	*Mobilization of crew and equipment, lump sum*	$ 350.00
2.	*Mobilization of crew & track rig, lump sum*	$ 750.00
3.	*Standard Penetration Test Borings:*	
	(a) (0-25 ft. depth)	$ 13.50/l.f.
	(b) (26-50 ft. depth)	$ 15.00/l.f.
	(c) (51-75 ft. depth)	$ 16.50/l.f.
	(d) (76-100 ft. depth)	$ 19.00/l.f.
4.	*Cone Penetration Tests*	$ 9.50/l.f.
5.	*Muck probes*	$ 110.00/hour
6.	*Install casing, as required*	$ 6.00/l.f.
7.	*Undisturbed samples (Shelby Tube)*	$120.00/each
8.	*Auger borings, 4-inch flight*	$ 10.00/l.f.
9.	*Laboratory Testing:*	
	(a) Permeability test	$ 250.00/test
	(b) Atterberg limits	$ 75.00/set
	(c) Sieve analysis	$ 60.00/each
	(d) Percent fines	$ 40.00/each
	(e) Natural moisture content	$ 12.00/each
	(f) Organic content	$ 40.00/each
	(g) Corrosion Series Test (soil or water)	$ 250..00/each
	(h) Dual Ring Infiltration	$ 500.00/test
10.	*Grouting boreholes, as required*	$ 4.00/LF
11.	*Engineering analysis and report preparation:*	
	Principal Engineer	$ 140.00/hour
	Registered Engineer	$ 125.00/hour
	Staff Engineer	$ 95.00/hour
	Sr. Lab Technician (soil classification)	$ 55.00/hour
	Sr. Engineering Technician	$ 55.00/hour
	Engineering Technician	$ 50.00/hour
	Technical Draftsperson	$ 65.00/hour
	Technical Typist	$ 40.00/hour
	Report copies (Beyond 4 per project)	$ 20.00/each
12.	Standby of drill crew and equipment for reasons beyond our control or difficult access.	$ 145.00/hour
13.	*Geophysical Survey Capabilities*	
	(a) Ground Penetrating Radar-GPR (Ambient Technologies)	$ 2,000.00/day
	(b) Electric Resistivity Imaging-ERI (Ambient Technologies)	$ 3,000.00/day
14.	*Utility Vac Truck*	
	(a) Catch Basin Clean out (TNT Sewer)	$ 1,000.00/trip

2017
SUMTER COUNTY RFQ# 040-0-2016/RS
FIELD AND LABORATORY TESTING FEE SCHEDULE

Soils and Aggregate Testing	
Proctor - Standard (ASTM D-698) or Modified (ASTM D-1557)	$ 90.00/each
Monitor site work (full time material removal, compaction)	$ 50.00/hour
Field density testing-(sand cone, drive sleeve, or nuclear) (minimum of 3 tests)	$ 22.00/each
Florida Bearing Value (FBV)	$ 70.00/each
Limerock Bearing Ratio (LBR)	$ 300.00/each
Carbonate content	$ 75.00/each
Moisture content (ASTM D-2216)	$ 12.00/each
Organic content (ASTM D-2974)	$ 40.00/each
Sieve analysis	$ 60.00/each
Percent Fines (ASTM D-1140)	$ 40.00/each
Atterberg Limits	$ 75.00/set
Concrete Sampling and Testing	
Compressive strength of concrete	
Including slump, air content, temperature, molding and breaking of 4"x 8" cylinders (set of 5 cylinders)	$ 85.00/set
Compressive strength of grout cubes/prisms	
Including molding and breaking of 3 each cubes or prisms	$ 85.00/set
Additional cylinders	$ 15.00/each
Additional slump	$ 15.00/each
Additional air content	$ 20.00/each
Cure, cap and break cylinders made by others	$ 20.00/each
Asphalt Sampling and Testing	
Marshall Stability, Extraction & Gradation	$ 200.00/each
Marshall Stability	$ 125.00/each
Extraction & Gradation	$ 160.00/each
Rolling Straightedge	$ 200.00/trip
Coring and Testing of Cores	
Mobilization of equipment	$ 180.00/trip
Concrete coring, per inch of depth	$ 10.00/inch
Trim, cap, and break concrete cores	$ 25.00/core
Thickness and density of paving cores	$ 35.00/core
Engineering Services	
Principal Engineer	$ 140.00/hour
Registered Engineer	$ 125.00/hour
Staff Engineer	$ 95.00/hour
Field Technician (Level I)	$ 50.00/hour
Field Technician Time (for pick-up and standby)	$ 50.00/hour
Field Technician (Level II)	$ 55.00/hour
Specialty Senior Technician (Drill Shaft, Paving & Plant Inspector)	$ 75.00/hour
Senior Lab Technician	$ 55.00/hour
Technical Typist	$ 40.00/hour

NOTES:

1.) The above list of services and fees represents the base services offered by CTL. Prices for services not shown will be quoted upon request. Hours over 8.0 hours per day, before 7:00 am and after 5:00 pm, weekends and holidays will be billed at the overtime rate of 1.5 times the rate shown above.

Central Testing Laboratory

EB 0002407

Engineering & Materials Testing

Leesburg
Reply to:

November 13, 2019

Sumter County Board of County Commissioners
7375 Powell Road
Wildwood, Florida 34785
(352) 689-4400 Phone
(352) 689-4401 Fax

Attention: Mr. Shailesh Patel
Shailesh.patel@sumtercountyfl.gov

Subject: Renewal of Professional Services Agreement
RFQ 040-0-2016/ RS Sumter County Geotechnical and Materials Testing Services

Dear Mr. Patel

Central Testing Laboratory, Inc. (CTL) wishes to renew the Professional Service Agreement between Sumter County and CTL for Professional Geotechnical and Materials Testing Services. Our current agreement is due for renewal February 13, 2020. CTL is willing to renew the contract with the same terms and conditions and without an increase in unit prices. At this time there are no outstanding project orders or deliverables due. We wish to renew for an additional one year term per original agreement.

CTL appreciates the opportunity to provide these services to Sumter County and looks forward to continuing our working relationship. Should you have any questions, or if further action is required on our part, please contact me at your earliest convenience at (352) 787-1268, or tstrouse@ctlfl.com.

Respectfully Submitted,
Central Testing Laboratory, Inc.

Theodore J. Strouse, P.E.
President

TJS/tmb

5400 S. Florida Avenue
Inverness, FL 34450
(352) 726-6447

130 Satellite Ct.
Leesburg, FL 34748
(352) 787-1268

Sumter County
(352) 793-3110

Marion County
(352) 622-1186

This document shall not be reproduced, except in full, without prior written approval of Central Testing Laboratory, Inc.

SUMTER COUNTY BOARD OF COUNTY COMMISSIONERS
EXECUTIVE SUMMARY

SUBJECT: **Task 38 With Kimley-Horn and Associates, Inc., Task #1 Will Provide Design Plans and Permits for a 300' +/- Water Line Extension with a New Fire Hydrant for the Animal Services Project. Task #2 the Engineer Will Provide As-Needed Professional Construction Phase Services for the Animal Services Project (Staff Recommends Approval).**

REQUESTED ACTION: **Staff Recommends Approval**

Meeting Type: Regular Meeting **DATE OF MEETING:** **5/12/2020**

CONTRACT: ☐ N/A Vendor/Entity: Kimley-Horn & Associates

Effective Date: 10/10/2017 Termination Date: 9/30/2020

Managing Division / Dept: **Engineering / Public Works**

BUDGET IMPACT: Task #1 $6,355.00, Task #2 $4,770.00 Total $11,125.00

FUNDING SOURCE: **Capital Outlay Reserve Fund**

Type: Capital **EXPENDITURE ACCOUNT:** **305-100-562-6272**

HISTORY/FACTS/ISSUES:

Task 38 with Kimley-Horn and Associates, Inc., On October 10, 2017, the BOCC approved RFQ # 023-0-2017/RS for Continuing Engineering Services Contract with Kimley-Horn. Under the Continuing Engineering Services Contract, Kimley-Horn was requested to submit a proposal for civil design services to support a new building, Sumter County Animal Services Center.

Scope of services:

Task #1 will provide design plans and permits for a 300' +/- water line extension with a new fire hydrant for the Animal Services project. The Sumter County Fire Marshall is requiring the new hydrant.

Task #2 the Engineer will provide as-needed professional construction phase services for the Animal Services multipurpose building. For this Agreement, the ENGINEER assumes an active construction duration of three calendar months for the Animal Services project.

Task#1 $6,355.00, Task #2 $4,770.00

Staff recommends approval for Task Order #38. The proposal is attached.

Prepared by: **Michael F. Jara** **Grammarly Check** ☒

Kimley»Horn

TASK ORDER NUMBER 38

Describing a specific agreement between Kimley-Horn and Associates, Inc. (ENGINEER), and Sumter County Board of County Commissioners (BOARD) in accordance with the terms of the Master Agreement for Continuing Professional Services dated October 10, 2017, which is incorporated herein by reference.

Identification of Project:

Project: Animal Control Building; Engineering Services

Client: Sumter County Board of County Commissioners

Project Understanding:

Design of the Animal Control Building Infrastructure improvements has been completed by the ENGINEER under a separate Agreement. The BOARD desires for the ENGINEER to provide a design for a water main extension and to perform Engineer of Record (EOR) services as requested throughout construction. This Amendment assumes that the BOARD will perform daily Construction, Engineering, and Inspection (CEI) services and therefore those services are not included in this Amendment.

Scope of Services:

The scope of services included in this Amendment is limited to the following tasks:

Task 1 – Utility Extension Design and Permitting

Under this Task the ENGINEER will provide design plans and permits for a 300' +/- water line extension with a new fire hydrant. The new hydrant is being required by the Sumter County Fire Marshall.

A. The ENGINEER will conduct a site visit to the area where the new utility line extension is needed. The ENGINEER will conduct a fire hydrant flow test at the last hydrant on CR529 to determine the available tie-in pressures and flowrates.

B. The ENGINEER will retain a survey subconsultant to obtain a specific purpose field survey for the area where the utility line extension will be proposed.

C. The ENGINEER will prepare a utility line extension construction plan depicting the proposed construction.

D. The ENGINEER will submit the construction plan to the BOARD for review and comment.

E. The ENGINEER will submit the construction plan to the City of Bushnell for review and permitting.

F. The ENGINEER will submit the construction plan to the Florida Department of Environmental Protection (FDEP) for review and permitting.

Task 2 – EOR Construction Phase Services

Under this task, the ENGINEER will provide as-needed professional construction phase services for the subject project as described below. For this Agreement, the ENGINEER assumes an active construction duration of three calendar months. If construction continues beyond the assumed three-month period, the ENGINEER will provide additional services under a new contract amendment.

The ENGINEER will provide professional construction phase services as specifically stated below:

A. *Pre-Construction Conference*. ENGINEER will attend a Pre-Construction Conference prior to commencement of Work at the Site.

B. *Visits to Site and Observation of Construction.* Kimley-Horn will make visits as directed by The BOARD in order to observe the progress of the work. Such observations will not be exhaustive or extend to every aspect of Contractor's work. Observations will to be limited to spot checking, selective measurement, and similar methods of general observation. Based on information obtained during site visits, Kimley-Horn will evaluate whether Contractor's work is generally proceeding in accordance with the Contract Documents, and Kimley-Horn will keep The BOARD informed of the general progress of the work.

C. *Shop Drawings and Samples*. Kimley-Horn will review and approve or take other appropriate action in respect to Shop Drawings and Samples and other data which Contractor is required to submit, but only for conformance with the information given in the Contract Documents. Such review and approvals or other action will not extend to means, methods, techniques, equipment choice and usage, schedules, or procedures of construction or to related safety programs

D. *Substantial Completion*. ENGINEER will, promptly after notice from Contractor that it considers the entire Work ready for its intended use, in company with BOARD and Contractor, conduct a site visit to determine if the Work is substantially complete. Work will be considered substantially complete following satisfactory completion of all items except for those identified on a final punch list. If after considering any objections of the BOARD, the ENGINEER considers the Work substantially complete, ENGINEER will notify the BOARD and Contractor.

E. *Permit Close-Outs.* The BOARD desires to complete the permit closeout task with assistance from the ENGINEER when necessary. The ENGINEER will assist the BOARD through the permit close out process with the applicable regulatory agencies, including the following:

1) Southwest Florida Water Management District

2) City of Bushnell Utility Department

3) Florida Department of Transportation

Additional Services If Required:

Any professional services not specifically listed in the above Scope of Services are not included in the contracted fees. Should the BOARD desire any of these services, the ENGINEER will prepare a fee, scope and schedule for the work at the time the services are requested.

Method of Compensation:

The ENGINEER will perform the services described herein per the fees noted below.

Task	Labor Fee Budget
Task 1 Utility Extension Design and Permitting	Lump Sum, $6,355.00
Task 2 EOR Construction Phase Services	Lump Sum, $4,770.00

All permitting, application, and similar project fees will be paid directly by the BOARD. Fees and expenses will be invoiced monthly based, as applicable, upon the percentage of services performed or actual services performed, and expenses incurred as of the invoice date. Payment will be due within ten (10) days of your receipt of the invoice, as per Item 6 in the Consulting Engineering Agreement. If additional efforts become necessary during the performance of the assignment, the ENGINEER will immediately advise the BOARD of any budget revisions.

Attachments: Table A

BOARD OF COUNTY COMMISSIONERS
OF SUMTER COUNTY, FLORIDA

BY:_____

TITLE:_____

DATE:_____

KIMLEY-HORN AND ASSOCIATES, INC.

BY:_____
Richard V. Busche, P.E.

TITLE: Senior Vice President

DATE: April 22, 2020

Kimley»Horn

TABLE A
FEE ESTIMATE FOR PROFESSIONAL SERVICES

PROJECT: ANIMAL SERVICES CENTER — FILE NO.
CLIENT: BOARD OF SUMTER COUNTY COMMISSIONERS — DATE: 04-22-2020
KHA PM: RICHARD BUSCHE
BASIS FOR ESTIMATE: APPROVED RATES PER RFQ 023-0-2017/RS

TASK NO.	DESCRIPTION	DIRECT LABOR (MAN-HOURS)										
		Principal Engineer	Senior Professional	Professional	Senior Technical Support	Survey Field Crew Supervisor	Survey Field Crew	Technical Support	Support Staff	LABOR HOURS	SUB ($)	LABOR TOTAL
		$ 200.00	$ 165.00	$ 135.00	$ 120.00	$ 100.00	$ 125.00	$ 90.00	$ 65.00	--	--	--
1.0	**UTILITY EXTENSION DESIGN AND PERMITTING**											
A	SITE VISIT AND HYDRANT TEST			4.0					2.0	6.0		$ 670
B	FIELD SURVEY			2.0						2.0	$ 1,800.00	$ 2,070
C	DESIGN PLAN		2.0	4.0	8.0					14.0		$ 1,830
D	BOARD REVIEW		1.0	2.0					2.0	5.0		$ 565
E	BUSHNELL REVIEW		1.0	4.0					2.0	7.0		$ 835
F	FDEP PERMITTING		1.0	4.0					2.0	7.0		$ 835
										0.0		$ -
2.0	**EOR CONSTRUCTION PHASE SERVICES**									0.0		$ -
A	PRE-CONSTRUCTION CONFERENCE	2.0								2.0		$ 400
B	SITE VISITS			8.0						8.0		$ 1,080
C	SHOP DRAWINGS			2.0				2.0		4.0		$ 450
D	SUBSTANTIAL COMPLETION	2.0		4.0					2.0	8.0		$ 1,070
E	PERMIT CLOSEOUTS	1.0		6.0				2.0	2.0	11.0		$ 1,320
TOTALS		**5.0**	**5.0**	**40.0**	**8.0**	**0.0**	**0.0**	**4.0**	**12.0**	**74.0**	**$ 1,800.00**	**$ 11,125.00**

SUMTER COUNTY BOARD OF COUNTY COMMISSIONERS
EXECUTIVE SUMMARY

SUBJECT: **Approval of the Maintenance Memorandum of Agreement (MMOA) for the On-System Multi-Use Trail Project with the Florida Department of Transportation (FDOT) for the SR 50 Widening Project from East of C 478A to the Lake County Line (FDOT Project No. 435859-4)**

REQUESTED ACTION: **Staff Recommends Approval**

Meeting Type: Regular Meeting **DATE OF MEETING:** **5/12/2020**

CONTRACT: ☐ N/A Vendor/Entity: FDOT
Effective Date: Termination Date: N/A
Managing Division / Dept: **Engineering**

BUDGET IMPACT: N/A
FUNDING SOURCE: **N/A**
Type: N/A **EXPENDITURE ACCOUNT:** **N/A**

HISTORY/FACTS/ISSUES:

The State of Florida Department of Transportation (FDOT) proposes to construct State Road No. 50, Section No. 18030, Financial Project No. 435859-4, in Sumter County, Florida, within the limits of the CR 478A to East of the Lake County Line.

As part of the project, a Multi-Use Trail will be constructed within the right-of-way of SR 50, and the County has committed to maintaining this Multi-Use Trail once the construction has been completed and accepted.

The perpetual maintenance of this Multi-Use Trail is in the best interest of the County, and FDOT has made application to Sumter County to execute and deliver to the FDOT the MMOA, in favor of the State of Florida, and said request having been duly considered.

Attached is the MMOA and Resolution for execution by the Board that was prepared by County Staff and FDOT and reviewed and approved for execution by the County Attorney.

The staff recommends approval.

Prepared by: **Deborah L. Snyder** **Grammarly Check** ☒

MAINTENANCE MEMORANDUM OF AGREEMENT
FOR ON SYSTEM MULTI-USE TRAIL PROJECT
Between
STATE OF FLORIDA, DEPARTMENT OF TRANSPORTATION
("DEPARTMENT")
and
SUMTER COUNTY
("LOCAL GOVERNMENT")

THIS AGREEMENT, made and entered into on _____, by and between the STATE OF FLORIDA, DEPARTMENT OF TRANSPORTATION, an executive agency of the State of Florida, hereinafter called the "DEPARTMENT," and SUMTER COUNTY, a political subdivision of the State of Florida, hereinafter called the "LOCAL GOVERNMENT."

WITNESSETH

WHEREAS, the State of Florida Legislature has approved and mandated the DEPARTMENT to complete various projects included in the DEPARTMENT'S Work Program; and

WHEREAS, the DEPARTMENT has jurisdiction over and maintains State Road 50 as part of the State Highway System; and

WHEREAS, the DEPARTMENT agrees to allow the Multi-Use Trail Project to be constructed and operated within the Right of Way only under certain conditions necessary to protect the traveling public; and

WHEREAS, LOCAL GOVERNMENT, by Resolution No. _____, dated _____, and attached hereto as Exhibit "C" has authorized its officers to execute this AGREEMENT on its behalf and to formally commit to permanent, perpetual maintenance of the Multi Use Trial Project.

NOW THEREFORE, for and in consideration of the mutual benefits to flow each to the other, the parties covenant and agree as follows:

1. The DEPARTMENT hereby agrees to construct or cause to be constructed the Multi-Use Trail Project as described in Exhibit "A" attached hereto and incorporated herein and as specified in the Project Plan(s) attached hereto and incorporated herein as Exhibit "B."

2. The LOCAL GOVERNMENT acknowledges that the DEPARTMENT will require the LOCAL GOVERNMENT to maintain the entire Multi-Use Trail Project, as depicted in the Construction Plans and Specifications of F.P.I.D. #435859-4-52-01 (from East of County Road 478A in Sumter County to East of the Sumter/ Lake County Line), in perpetuity, according to

the DEPARTMENT standards in effect on the date of this agreement, which include, but are not limited to, Design Standards, and the Standard Specifications, and as amended from time to time and according to the requirements of the Americans with Disabilities Act.

3. Items to be maintained by the LOCAL GOVERNMENT shall include but are not limited to: vegetation management and removal of graffiti and all aesthetic features. The LOCAL GOVERNMENT shall maintain pavement surfaces free from residue accumulation, algae, vegetation, and other slip or trip hazards. The LOCAL GOVERNMENT shall trim landscaping, mow (if mowing a higher standard than the DEPARTMENT standard is desired), sweep, edge and provide weed control along the Multi-Use Trail Project corridor which is described as twelve (12) foot wide asphalt path from East of County Road 478A in Sumter County to East of the Sumter/ Lake County Line. The LOCAL GOVERNMENT shall ensure the safety of the Public by repairing trail related slope erosion and maintaining trail related signs, sign poles, striping, pavement symbols, traffic markings, detectable warning surfaces, pavers, crosswalks, bollards, delineators, walls, railings, barriers, guardrail, lighting, pedestrian/bicycle signals and any other safety features within the Multi-Use Trail Project corridor in accordance with DEPARTMENT standards. The LOCAL GOVERNMENT shall maintain paint on railings, sign poles, structures, etc. within the Multi-Use Trail Project corridor. Repairs to any Multi-Use Trail Project structural or safety feature shall be in kind and to DEPARTMENT standards. The LOCAL GOVERNMENT shall maintain all landscaping to DEPARTMENT standards in good operational condition. The LOCAL GOVERNMENT shall maintain and repair the Multi-Use Trail Project at its sole cost and expense, in a good and workmanlike manner, and with reasonable care.

4. The DEPARTMENT shall mow, including litter control associated with the mowing cycle, within the Multi-Use Trail Project as defined in Section 2 of this Agreement according to the Maintenance Rating Program (MRP) Manual. Mowing and litter control requirements above MRP standards shall be handled and performed by the LOCAL GOVERNMENT.

5. The DEPARTMENT shall maintain the pavement within the Multi-Use Trail Project as defined in Section 2. of this Agreement, according to the DEPARTMENT Standards.

6. The LOCAL GOVERNMENT shall conduct a minimum of one annual inspection of the Multi-Use Trail to ensure that any and all safety deficiencies are addressed.

7. When the Multi-Use Trail Project is at the end of its useful life as determined by the LOCAL GOVERNMENT, the LOCAL GOVERNMENT shall prioritize the Replacement or Reconstruction of the Multi-Use Trail Project as if it was a new Project.

8. Should the LOCAL GOVERNMENT desire to add future amenities to the Multi-Use Trail Project, the LOCAL GOVERNMENT shall contact the DEPARTMENT for prior approval.

9. If at any time the LOCAL GOVERNMENT has not performed the maintenance responsibility on the Multi-Use Trail Project in accordance with this Agreement, the DEPARTMENT shall have the option of (a) notifying the LOCAL GOVERNMENT of the deficiency with a requirement that it be corrected within a specified time; or (b) the DEPARTMENT may perform the necessary maintenance at the LOCAL GOVERNMENT'S sole cost and expense, and send an invoice to the LOCAL GOVERNMENT, equal to the cost incurred by the DEPARTMENT for such maintenance. Any action taken by the DEPARTMENT does not relieve any obligation of the LOCAL GOVERNMENT under the terms and conditions of this Agreement. Failure to perform maintenance of the Multi-Use Trail Project in accordance with this Agreement may impact DEPARTMENT funding participation in future LOCAL GOVERNMENT projects.

10. The DEPARTMENT may remove, relocate, or adjust the Multi-Use Trail Project in whole or in part at any time in the future as determined to be necessary by the DEPARTMENT in order that the adjacent State Road be widened, altered, or otherwise changed. The DEPARTMENT shall give the LOCAL GOVERNMENT notice regarding such removal, relocation, or adjustment. Any removal, relocation, or adjustment shall require LOCAL GOVERNMENT approval if maintenance responsibility is to be assigned to the LOCAL GOVERNMENT.

11. This Agreement may be terminated under either of the following conditions: (a) by the DEPARTMENT, if the LOCAL GOVERNMENT fails to perform its duties under this Agreement, following ten (10) days written notice; or (b) by the DEPARTMENT, for refusal by the LOCAL GOVERNMENT to allow public access to public records subject to the provisions of Chapter 119, Florida Statutes.

12. This Agreement may not be assigned or transferred by the LOCAL GOVERNMENT in whole or in part without the consent of the DEPARTMENT.

13. This Agreement shall be governed by and construed in accordance with the laws of the State of Florida. In the event of a conflict between any portion of the Agreement and Florida law, the laws of Florida shall prevail.

The remainder of this page intentionally left blank.

IN WITNESS WHEREOF, the parties hereto have executed this Agreement on the dates exhibited, by the signatures below.

SUMTER COUNTY
FLORIDA

By: _____

Title: County Administrator

Date: _____

STATE OF FLORIDA
DEPARTMENT OF TRANSPORTATION

By: _____

Title: Director of Transportation Operations

Date: _____

Attest: _____ (SEAL)
Executive Secretary

LOCAL GOVERNMENT Legal Review:

By:_____

DEPARTMENT Legal Review:

By:_____

Exhibit "A"
SCOPE OF SERVICES
FM#: 435859-4-52-01

As part of the State Road 50 widening project in Sumter County, a trail/multi use path will be constructed. The project limits are from East of County Road 478A in Sumter County to East of the Sumter/Lake County Line. The project extends approximately 0.4 miles into Lake County. The trail will be constructed along the southern side of the roadway within the proposed DEPARTMENT Right-of-Way (ROW). It will be a 12-foot-wide asphalt path designed to DEPARTMENT trail standards. A display showing the location and limits of this facility is attached hereto as Exhibit "A-1". The trail will have three distinct segments as described below:

Generally, the trail is separated from the eastbound lanes of State Road 50 by a roadside swale/ditch (see Typical Section 2 attached hereto as Exhibit "A-2"). Portions of the project go through the Withlacoochee State Forest. Within the forestry limits, the trail shifts its alignment in to be adjacent to the roadway shoulder (see Typical Section 3 attached hereto as Exhibit "A-3"). This was done to reduce impacts to the forest and the associated sensitive lands.

SIDEWALK/ SHARED USE PATH EXHIBIT "A-1"

FPID 4358594-4-52-01

END PROJECT FPID 435859-3
BEGIN PROJECT FPID 435859-4

SUMTER/LAKE COUNTY LINE

LEGEND

SHARED USE PATH

SIDEWALK

Exhibit "A-2"

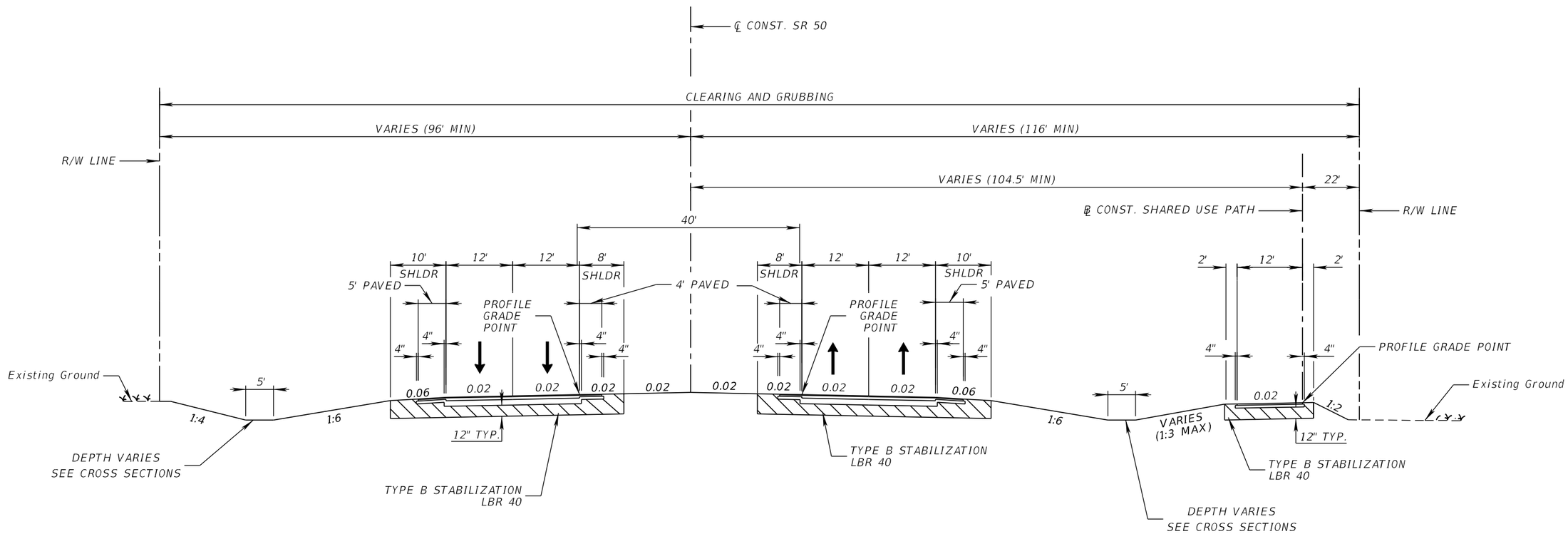

TYPICAL SECTION NO. 2
SR 50

STA. 1205+00.00 TO STA. 1401+67.94 EB
STA. 1198+00.00 TO STA. 1401+67.94 WB

NEW CONSTRUCTION

OPTIONAL BASE GROUP 10 WITH
TYPE SP STRUCTURAL COURSE (TRAFFIC C) (3 ½")
AND FRICTION COURSE FC-5 (¾") (PG 76-22)

STA. 1458+44.17 TO STA. 1542+43.85 *
STA. 1587+20.36 TO STA. 1622+35.63

NEW CONSTRUCTION

OPTIONAL BASE GROUP 10 WITH
TYPE SP STRUCTURAL COURSE (TRAFFIC D) (2 ½")
TYPE SP STRUCTURAL COURSE (TRAFFIC D) (1 ½") (PG 76-22)
AND FRICTION COURSE FC-5 (¾") (PG 76-22)

* SOME AREAS WITHIN THIS STATION RANGE WILL HAVE A HIGH WATER TABLE. THE LIMITS AND PAVEMENT DESIGN ARE NOTED BELOW.

STA. 1458+44.17 TO STA. 1464+00.00
STA. 1493+00.00 TO STA. 1511+50.00

NEW CONSTRUCTION (HIGH WATER TABLE)

OPTIONAL BASE GROUP 12 (B-12.5 ONLY) WITH
TYPE SP STRUCTURAL COURSE (TRAFFIC D) (2 ½")
TYPE SP STRUCTURAL COURSE (TRAFFIC D) (1 ½") (PG 76-22)
AND FRICTION COURSE FC-5 (¾") (PG 76-22)

SHOULDER PAVEMENT

OPTIONAL BASE GROUP 4 WITH
TYPE SP STRUCTURAL COURSE (TRAFFIC B) (1 ½")
AND FRICTION COURSE FC-5 (¾") (PG 76-22)

SHOULDER PAVEMENT (HIGH WATER TABLE)

OPTIONAL BASE GROUP 4 (B-12.5 ONLY) WITH
TYPE SP STRUCTURAL COURSE (TRAFFIC B) (1 ½")
AND FRICTION COURSE FC-5 (¾") (PG 76-22)

TRAFFIC DATA

CURRENT YEAR = 2017 AADT = 8300
ESTIMATED OPENING YEAR = 2025 AADT = 13000
ESTIMATED DESIGN YEAR = 2045 AADT = 25000
K = 9.5% D = 55.0% T = 21.0% (24 HOUR)
DESIGN HOUR T = 11%
DESIGN SPEED = 65 MPH

SHARED USE PATH

OPTIONAL BASE GROUP 1 WITH
TYPE SP STRUCTURAL COURSE (TRAFFIC B) (1 ½")

REVISIONS			
DATE	DESCRIPTION	DATE	DESCRIPTION

JEFFREY A. MESSENGER, P.E.
P.E. LICENSE NUMBER 57539
BCC ENGINEERING, INC.
160 NORTH WESTMONTE DRIVE, SUITE 2000
ALTAMONTE SPRINGS, FLORIDA 32714
CERTIFICATE OF AUTHORIZATION NO. 7184

STATE OF FLORIDA
DEPARTMENT OF TRANSPORTATION

ROAD NO.	COUNTY	FINANCIAL PROJECT ID
SR 50	SUMTER	435859-4-52-01

TYPICAL SECTION

SHEET NO.

Exhibit "A-3"

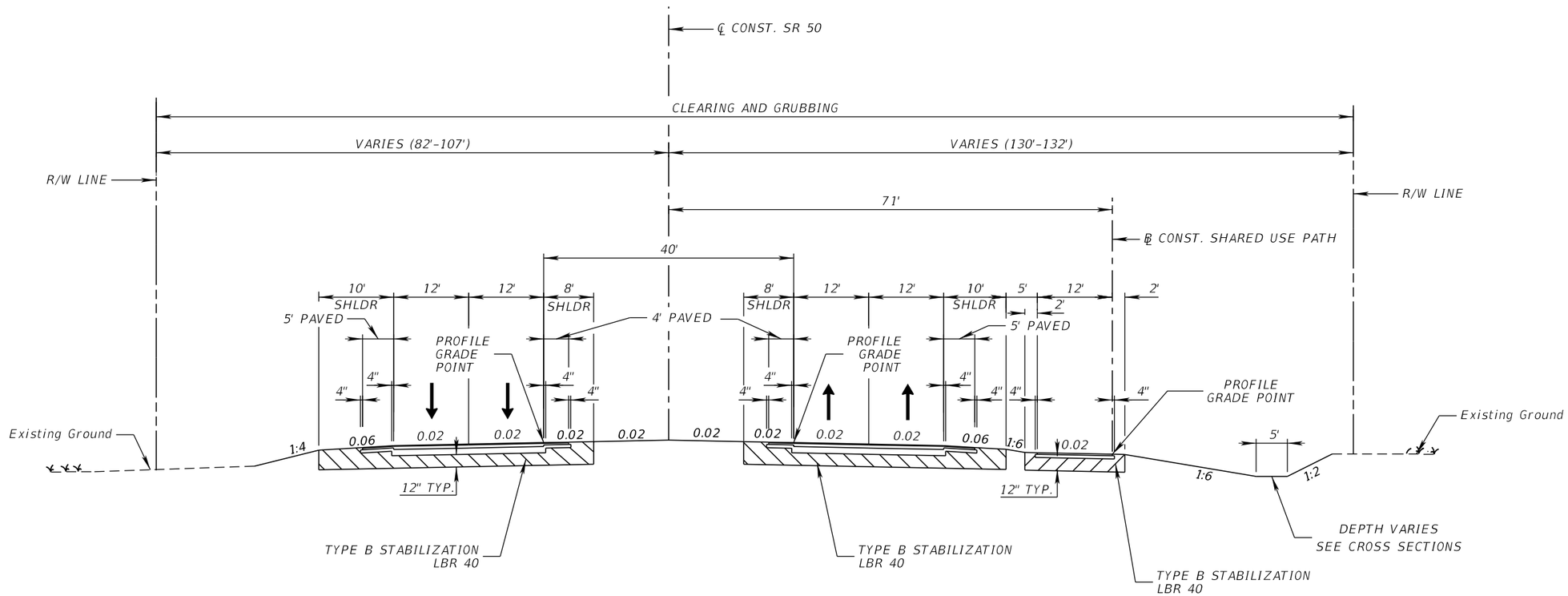

TYPICAL SECTION NO. 3
SR 50
STA. 1401+67.94 TO STA. 1458+44.17 *
STA. 1542+43.85 TO STA. 1587+20.36

NEW CONSTRUCTION

OPTIONAL BASE GROUP 10 WITH
TYPE SP STRUCTURAL COURSE (TRAFFIC D) (2 ½")
TYPE SP STRUCTURAL COURSE (TRAFFIC D) (1 ½") (PG 76-22)
AND FRICTION COURSE FC-5 (¾") (PG 76-22)

SHOULDER PAVEMENT

OPTIONAL BASE GROUP 4 WITH
TYPE SP STRUCTURAL COURSE (TRAFFIC B) (1 ½")
AND FRICTION COURSE FC-5 (¾") (PG 76-22)

SHARED USE PATH

OPTIONAL BASE GROUP 1 WITH
TYPE SP STRUCTURAL COURSE (TRAFFIC B) (1 ½")

* SOME AREAS WITHIN THIS STATION RANGE WILL HAVE A HIGH WATER TABLE. THE LIMITS AND PAVEMENT DESIGN ARE NOTED BELOW.

STA. 1411+75.00 TO STA. 1416+00.00
STA. 1435+75.00 TO STA. 1438+50.00
STA. 1454+00.00 TO STA. 1458+44.17

NEW CONSTRUCTION (HIGH WATER TABLE)

OPTIONAL BASE GROUP 12 (B-12.5 ONLY) WITH
TYPE SP STRUCTURAL COURSE (TRAFFIC D) (2 ½")
TYPE SP STRUCTURAL COURSE (TRAFFIC D) (1 ½") (PG 76-22)
AND FRICTION COURSE FC-5 (¾") (PG 76-22)

SHOULDER PAVEMENT (HIGH WATER TABLE)

OPTIONAL BASE GROUP 4 (B-12.5 ONLY) WITH
TYPE SP STRUCTURAL COURSE (TRAFFIC B) (1 ½")
AND FRICTION COURSE FC-5 (¾") (PG 76-22)

TRAFFIC DATA

CURRENT YEAR = 2017 AADT = 8300
ESTIMATED OPENING YEAR = 2025 AADT = 13000
ESTIMATED DESIGN YEAR = 2045 AADT = 25000
K = 9.5% D = 55.0% T = 21.0% (24 HOUR)
DESIGN HOUR T = 11%
DESIGN SPEED = 65 MPH

REVISIONS			
DATE	DESCRIPTION	DATE	DESCRIPTION

JEFFREY A. MESSENGER, P.E.
P.E. LICENSE NUMBER 57539
BCC ENGINEERING, INC.
160 NORTH WESTMONTE DRIVE, SUITE 2000
ALTAMONTE SPRINGS, FLORIDA 32714
CERTIFICATE OF AUTHORIZATION NO. 7184

STATE OF FLORIDA
DEPARTMENT OF TRANSPORTATION

ROAD NO.	COUNTY	FINANCIAL PROJECT ID
SR 50	SUMTER	435859-4-52-01

TYPICAL SECTION

SHEET NO.

Exhibit "B"
CONSTRUCTION PLANS
FM#435859-4-52-01

The Contract Plans for the construction of Department Project # 439859-4-52-01 (from East of County Road 478A in Sumter County to East of the Sumter/ Lake County Line), are identified herein by attaching the cover sheet of said plans and by such, the entire set of Contract Plans are incorporated by reference.

CONTRACT PLANS COMPONENTS

ROADWAY PLANS
SIGNING AND PAVEMENT MARKING PLANS
LIGHTING PLANS
LANDSCAPE PLANS
STRUCTURE PLANS

STATE OF FLORIDA
DEPARTMENT OF TRANSPORTATION

CONTRACT PLANS

FINANCIAL PROJECT ID 435859-4-52-01

SUMTER COUNTY (18020, 18030)

LAKE COUNTY (11070)

STATE ROAD NO. 50

EAST OF CR 757 TO EAST OF SUMTER/LAKE COUNTY LINE

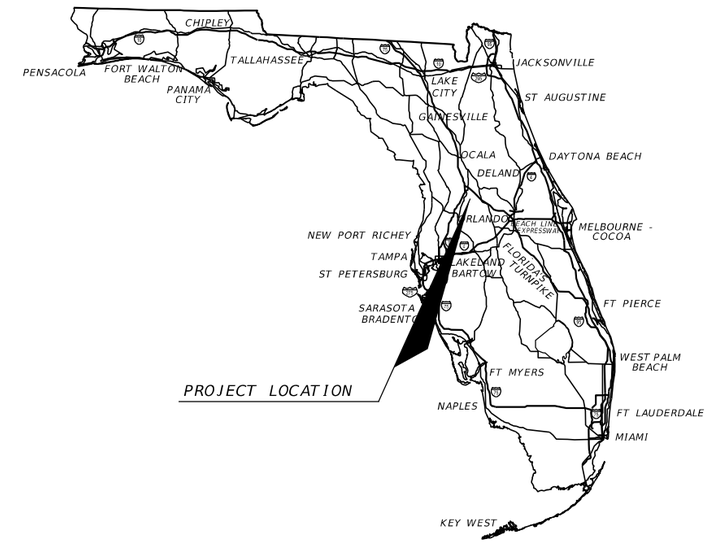

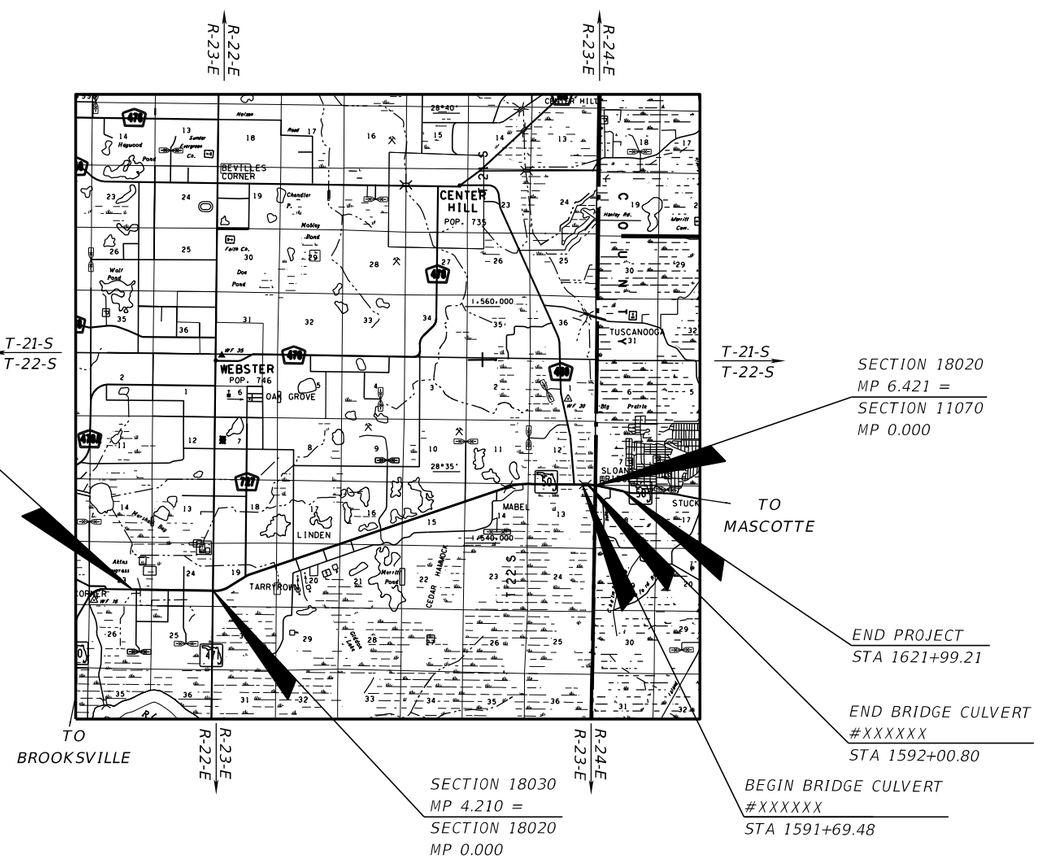

N

PRELIMINARY ESTIMATES REVIEW
JULY 12, 2019

INDEX OF ROADWAY PLANS

SHEET NO.	SHEET DESCRIPTION
1	KEY SHEET
2-11	DRAINAGE MAPS
12-13	TYPICAL SECTIONS
14-15	PROJECT LAYOUT
16	GENERAL NOTES
17-51	ROADWAY PLAN & PROFILES
52-64	TRAIL PROFILES
65-66	INTERSECTION DETAILS
67	SPECIAL DETAILS
68-284	ROADWAY CROSS SECTIONS
285-291	TEMPORARY TRAFFIC CONTROL PLANS

* This sheet is included in the Index of Roadway Plans only to indicate that it is part of the Roadway Plans. This sheet is contained in a separate digitally signed and sealed document.

GOVERNING STANDARD PLANS:

Florida Department of Transportation, FY2019-20 Plans for Road and Bridge Construction and applicable Interim Revisions (IRs).

Standard Plans for Road Construction and associated IRs are available at the following website: http://www.fdot.gov/design/standardplans

APPLICABLE IRs: N/A

Standard Plans for Bridge Construction are included in the Structures Plans Component

GOVERNING STANDARD SPECIFICATIONS:

Florida Department of Transportation, JULY 2019 Standard Specifications for Road and Bridge Construction at the following website: http://www.fdot.gov/programmanagement/Implemented/SpecBooks

ROADWAY PLANS ENGINEER OF RECORD:

JEFFREY A. MESSENGER, P.E.
P.E. NO.: 57539
BCC ENGINEERING, INC
160 N WESTMONTE DRIVE, SUITE 2000
ALTAMONTE SPRINGS, FL 32714
CONTRACT NO.: C9Z41
VENDOR NO.: 65-0540100
CERTIFICATE OF AUTHORIZATION NO.: 7184

FDOT PROJECT MANAGER:

JUDE JEAN-FRANCOIS, P.E.

CONSTRUCTION CONTRACT NO.	FISCAL YEAR	SHEET NO.
T-XXXX	25	1

Exhibit "C"
AGENCY RESOLUTION
FM#: 435859-4-52-01

The agency Resolution authorizing entry into this Agreement is attached and incorporated into this Agreement.

RESOLUTION NO 2020-____

ON MOTION of Commissioner _____, seconded by Commissioner _____, the following Resolution was adopted:

WHEREAS, the State of Florida Legislature has approved and mandated the Florida Department of Transportation (DEPARTMENT) to complete various projects included in the DEPARTMENT'S Work Program; and

WHEREAS, the DEPARTMENT has jurisdiction over and maintains State Road 50 from East of County Road 478A to East of the Lake County Line as part of the State Highway System; and

WHEREAS, the DEPARTMENT agrees to allow the Multi-Use Trail Project to be constructed and operated within the Right of Way only under certain conditions necessary to protect the traveling public; and

WHEREAS, the DEPARTMENT has made application to Sumter County (COUNTY) to formally commit to permanent, perpetual maintenance of the Multi-Use Trail Project.

NOW, THEREFORE, for and in consideration of the mutual benefits to flow each to the other, the parties covenant and agree as follows:

1. The DEPARTMENT hereby agrees to construct or cause to be constructed the Multi-Use Trail Project as depicted in the Construction Plans and Specifications of the DEPARTMENT'S FPID #435859-4-52-01 SR 50 from East of County Road 478A to East of the Lake County Line.

2. The County acknowledges that the DEPARTMENT will require the County to maintain the entire Multi-Use Trail Project, in perpetuity, according to the DEPARTMENT standards in effect on the date of this agreement.

NOW, THEREFORE, BE IT RESOLVED by the Board of County Commissioners of Sumter County, that the application of the DEPARTMENT to the COUNTY for the perpetual Maintenance Memorandum of Agreement for the On-System Multi-Use Trail Project should be drawn and executed by _____, on behalf of this Board of County Commissioners.

NOW, THEREFORE, BE IT RESOLVED by the Board of Sumter Commissioners as follows:

1. That this Resolution is transmitted to the DEPARTMENT.

2. This Resolution shall be effective upon passage by the Sumter County Board of County Commissioners.

PASSED AND ADOPTED BY THE BOARD OF COUNTY COMMISSIONERS OF SUMTER COUNTY, this _____ day of _____, 2020.

ATTEST:

Board of County Commissioners of Sumter County, FL

_____

Caroline Alrestimawi, Deputy Clerk

_____

Steve Printz, Chairman

SUMTER COUNTY BOARD OF COUNTY COMMISSIONERS
EXECUTIVE SUMMARY

SUBJECT: **Approval of the Maintenance Memorandum of Agreement (MMOA) for the On-System Multi-Use Trail Project with the Florida Department of Transportation (FDOT) for the SR 50 Widening Project from Hernando County Line to East of C 478A (FDOT Project No. 435859-3)**

REQUESTED ACTION: **Staff Recommends Approval**

Meeting Type: Regular Meeting **DATE OF MEETING:** **5/12/2020**

CONTRACT: ☐ N/A Vendor/Entity: FDOT
Effective Date: Termination Date: N/A
Managing Division / Dept: **Engineering**

BUDGET IMPACT: N/A
FUNDING SOURCE: **N/A**
Type: N/A **EXPENDITURE ACCOUNT:** **N/A**

HISTORY/FACTS/ISSUES:

The State of Florida Department of Transportation (FDOT) proposes to construct State Road No. 50, Section No. 18030, Financial Project No. 435859-3, in Sumter County, Florida, within the limits of the Hernando/Sumter County Line/US 301 to East of CR 478A.

As part of the project, a Multi-Use Trail will be constructed within the right-of-way of SR 50, and the County has committed to maintaining this Multi-Use Trail once the construction has been completed and accepted.

The perpetual maintenance of this Multi-Use Trail is in the best interest of the County, and FDOT has made application to Sumter County to execute and deliver to the FDOT the MMOA, in favor of the State of Florida, and said request having been duly considered.

Attached is the MMOA and Resolution for execution by the Board that was prepared by County Staff and FDOT and reviewed and approved for execution by the County Attorney.

The staff recommends approval.

Prepared by: **Deborah L. Snyder** **Grammarly Check** ☒

MAINTENANCE MEMORANDUM OF AGREEMENT
FOR ON SYSTEM MULTI-USE TRAIL PROJECT
Between
STATE OF FLORIDA, DEPARTMENT OF TRANSPORTATION
("DEPARTMENT")
and
SUMTER COUNTY
("LOCAL GOVERNMENT")

THIS AGREEMENT, made and entered into on _____, by and between the STATE OF FLORIDA, DEPARTMENT OF TRANSPORTATION, an executive agency of the State of Florida, hereinafter called the "DEPARTMENT," and SUMTER COUNTY, a political subdivision of the State of Florida, hereinafter called the "LOCAL GOVERNMENT."

WITNESSETH

WHEREAS, the State of Florida Legislature has approved and mandated the DEPARTMENT to complete various projects included in the DEPARTMENT'S Work Program; and

WHEREAS, the DEPARTMENT has jurisdiction over and maintains State Road 50 as part of the State Highway System; and

WHEREAS, the DEPARTMENT agrees to allow the Multi-Use Trail Project to be constructed and operated within the Right of Way only under certain conditions necessary to protect the traveling public; and

WHEREAS, LOCAL GOVERNMENT, by Resolution No._____, dated _____, and attached hereto as Exhibit "C" has authorized its officers to execute this AGREEMENT on its behalf and to formally commit to permanent, perpetual maintenance of the Multi Use Trial Project.

NOW THEREFORE, for and in consideration of the mutual benefits to flow each to the other, the parties covenant and agree as follows:

1. The DEPARTMENT hereby agrees to construct or cause to be constructed the Multi-Use Trail Project as described in Exhibit "A" attached hereto and incorporated herein and as specified in the Project Plan(s) attached hereto and incorporated herein as Exhibit "B."

2. The LOCAL GOVERNMENT acknowledges that the DEPARTMENT will require the LOCAL GOVERNMENT to maintain the entire Multi-Use Trail Project, as depicted in the Construction Plans and Specifications of F.P.I.D. #435859-3-52-01 (from the Hernando/ Sumter County Line to east of County Road 478A), in perpetuity, according to the

DEPARTMENT standards in effect on the date of this agreement, which include, but are not limited to, Design Standards, and the Standard Specifications, and as amended from time to time and according to the requirements of the Americans with Disabilities Act.

3. Items to be maintained by the LOCAL GOVERNMENT shall include but are not limited to: vegetation management and removal of graffiti and all aesthetic features. The LOCAL GOVERNMENT shall maintain pavement surfaces free from residue accumulation, algae, vegetation, and other slip or trip hazards. The LOCAL GOVERNMENT shall trim landscaping, mow (if mowing a higher standard than the DEPARTMENT standard is desired), sweep, edge and provide weed control along the Multi-Use Trail Project corridor which is described as twelve (12) foot wide asphalt path from the Hernando/ Sumter County Line to east of County Road 478A. The LOCAL GOVERNMENT shall ensure the safety of the Public by repairing trail related slope erosion and maintaining trail related signs, sign poles, striping, pavement symbols, traffic markings, detectable warning surfaces, pavers, crosswalks, bollards, delineators, walls, railings, barriers, guardrail, lighting, pedestrian/bicycle signals and any other safety features within the Multi-Use Trail Project corridor in accordance with DEPARTMENT standards. The LOCAL GOVERNMENT shall maintain paint on railings, sign poles, structures, etc. within the Multi-Use Trail Project corridor. Repairs to any Multi-Use Trail Project structural or safety feature shall be in kind and to DEPARTMENT standards. The LOCAL GOVERNMENT shall maintain all landscaping to DEPARTMENT standards in good operational condition. The LOCAL GOVERNMENT shall maintain and repair the Multi-Use Trail Project at its sole cost and expense, in a good and workmanlike manner, and with reasonable care.

4. The DEPARTMENT shall mow, including litter control associated with the mowing cycle, within the Multi-Use Trail Project as defined in Section 2 of this Agreement according to the Maintenance Rating Program (MRP) Manual. Mowing and litter control requirements above MRP standards shall be handled and performed by the LOCAL GOVERNMENT.

5. The DEPARTMENT shall maintain the pavement within the Multi-Use Trail Project as defined in Section 2. of this Agreement, according to the DEPARTMENT Standards.

6. The LOCAL GOVERNMENT shall conduct a minimum of one annual inspection of the Multi-Use Trail to ensure that any and all safety deficiencies are addressed.

7. When the Multi-Use Trail Project is at the end of its useful life as determined by the LOCAL GOVERNMENT, the LOCAL GOVERNMENT shall prioritize the Replacement or Reconstruction of the Multi-Use Trail Project as if it was a new Project.

8. Should the LOCAL GOVERNMENT desire to add future amenities to the Multi-Use Trail Project, the LOCAL GOVERNMENT shall contact the DEPARTMENT for prior approval.

9. If at any time the LOCAL GOVERNMENT has not performed the maintenance responsibility on the Multi-Use Trail Project in accordance with this Agreement, the DEPARTMENT shall have the option of (a) notifying the LOCAL GOVERNMENT of the deficiency with a requirement that it be corrected within a specified time; or (b) the DEPARTMENT may perform the necessary maintenance at the LOCAL GOVERNMENT'S sole cost and expense, and send an invoice to the LOCAL GOVERNMENT, equal to the cost incurred by the DEPARTMENT for such maintenance. Any action taken by the DEPARTMENT does not relieve any obligation of the LOCAL GOVERNMENT under the terms and conditions of this Agreement. Failure to perform maintenance of the Multi-Use Trail Project in accordance with this Agreement may impact DEPARTMENT funding participation in future LOCAL GOVERNMENT projects.

10. The DEPARTMENT may remove, relocate, or adjust the Multi-Use Trail Project in whole or in part at any time in the future as determined to be necessary by the DEPARTMENT in order that the adjacent State Road be widened, altered, or otherwise changed. The DEPARTMENT shall give the LOCAL GOVERNMENT notice regarding such removal, relocation, or adjustment. Any removal, relocation, or adjustment shall require LOCAL GOVERNMENT approval if maintenance responsibility is to be assigned to the LOCAL GOVERNMENT.

11. This Agreement may be terminated under either of the following conditions: (a) by the DEPARTMENT, if the LOCAL GOVERNMENT fails to perform its duties under this Agreement, following ten (10) days written notice; or (b) by the DEPARTMENT, for refusal by the LOCAL GOVERNMENT to allow public access to public records subject to the provisions of Chapter 119, Florida Statutes.

12. This Agreement may not be assigned or transferred by the LOCAL GOVERNMENT in whole or in part without the consent of the DEPARTMENT.

13. This Agreement shall be governed by and construed in accordance with the laws of the State of Florida. In the event of a conflict between any portion of the Agreement and Florida law, the laws of Florida shall prevail.

The remainder of this page intentionally left blank.

IN WITNESS WHEREOF, the parties hereto have executed this Agreement on the dates exhibited, by the signatures below.

SUMTER COUNTY
FLORIDA

By: _____

Title: County Administrator

Date: _____

STATE OF FLORIDA
DEPARTMENT OF TRANSPORTATION

By: _____

Title: Director of Transportation Operations

Date: _____

Attest: _____ (SEAL)
Executive Secretary

LOCAL GOVERNMENT Legal Review:

By:_____

DEPARTMENT Legal Review:

By:_____

Exhibit "A"
SCOPE OF SERVICES
FM#: 435859-3-52-01

As part of the State Road 50 widening project in Sumter County, a trail/multi use path will be constructed. The project limits are from the Hernando/Sumter County Line to east of County Road 478A, for a total project length of 2.762 miles (the trail will continue east as part of the adjacent State Road 50 widening project, FPID# 435859-4-52-01). The trail will be constructed along the southern side of the roadway within the proposed DEPARTMENT Right-of-Way (ROW). It will be a 12-foot-wide asphalt path designed to DEPARTMENT trail standards. A display showing the location and limits of this facility is attached hereto as Exhibit "A-1". The trail will have two distinct segments as described below:

Generally, the trail is separated from the eastbound lanes of State Road 50 by a roadside swale/ditch (see Typical Section 2 attached hereto as Exhibit "A-2"). From the begin project to approximately 1.5 miles east the project goes through the Withlacoochee State Forest. Within the forestry limits, the trail shifts its alignment in to be adjacent to the roadway shoulder (see Typical Section Drop Down, below Typical Section No. 1). This was done to reduce impacts to the forest and the associated sensitive lands. At the begin project the trail will be constructed as part of a proposed bridge which is to be constructed south of the existing bridge which spans the Little Withlacoochee River. Also, within the bridge limits the trail will be adjacent to guardrail as shown in Typical Section Detail B. There will be a portion of the project where the trail will need to be accommodated adjacent to the outside shoulder where shoulder gutter will be accommodated. This scenario is shown in Typical Section Detail A.

SHARED USE PATH EXHIBIT "A-1"

ID 435 9-3-52-01

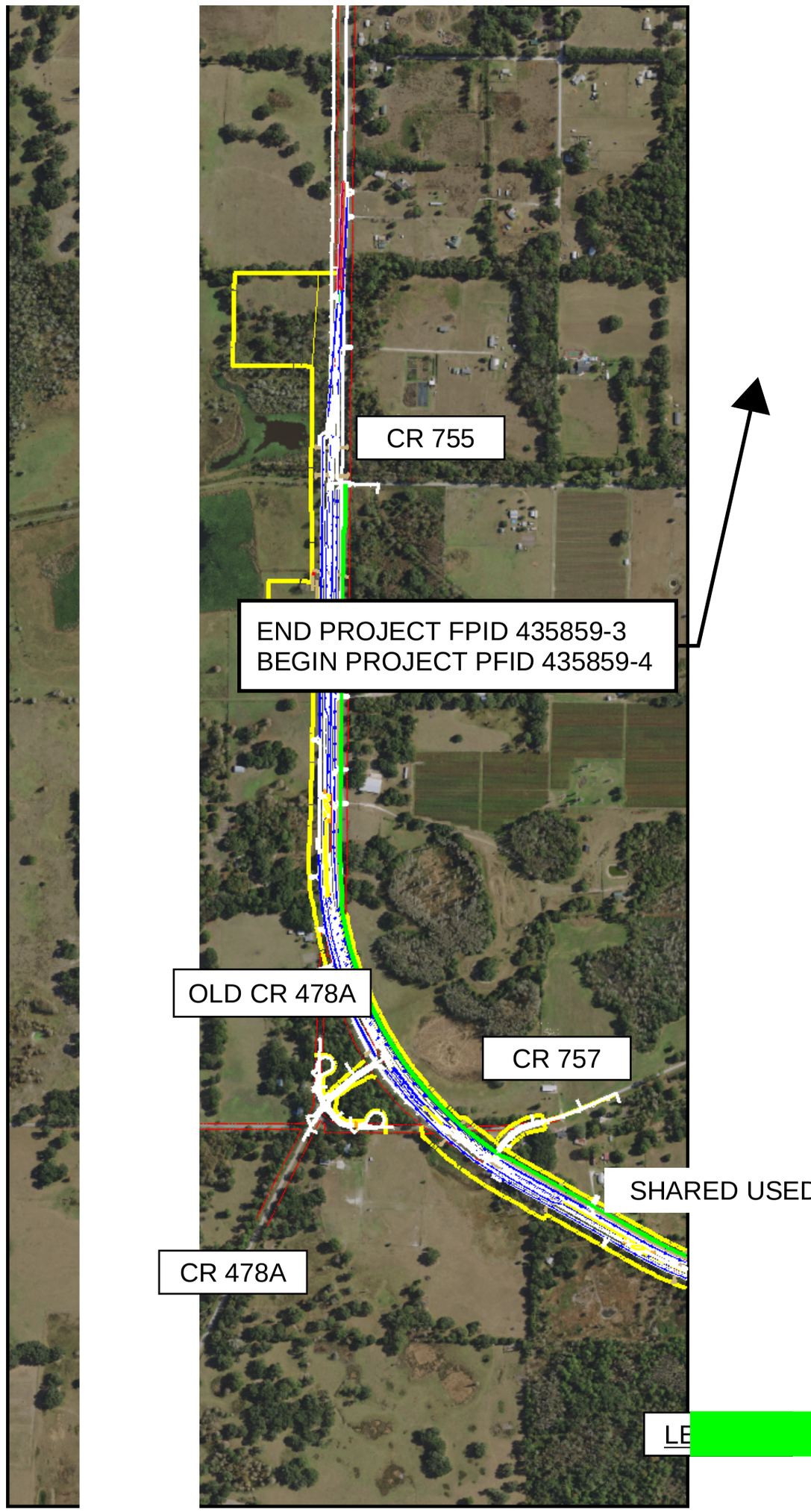

Exhibit "A-2"

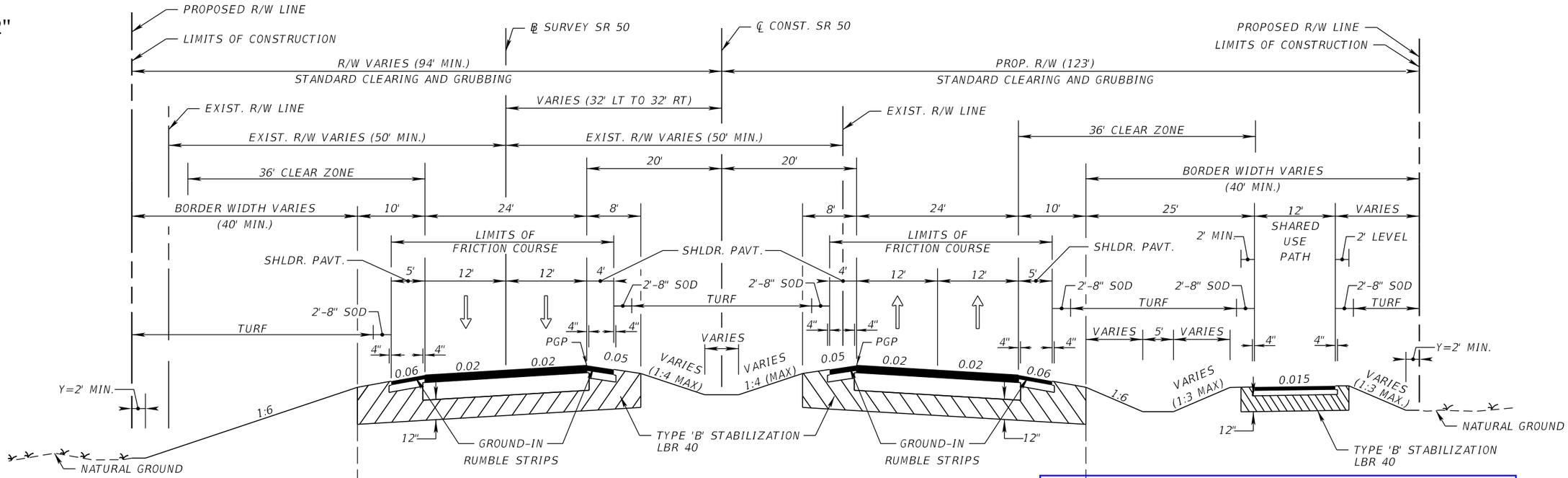

TYPICAL SECTION NO. 2
SR 50 - FULL RECONSTRUCTION

(N.T.S.)

STA. 3077+39.64 TO STA. 3096+56.85
STA. 3099+06.85 TO 3100+00.00 BK=
STA. 1042+59.35 AH TO STA. 1215+41.48

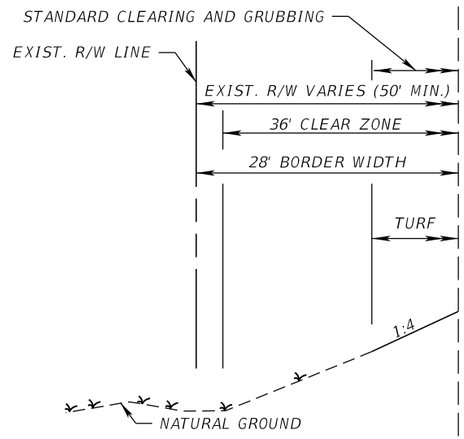

STA. 3077+39.64 TO STA. 3096+56.85
STA. 3099+06.85 TO 3100+00.00 BK=
STA. 1042+59.35 AH TO STA. 1105+00.00

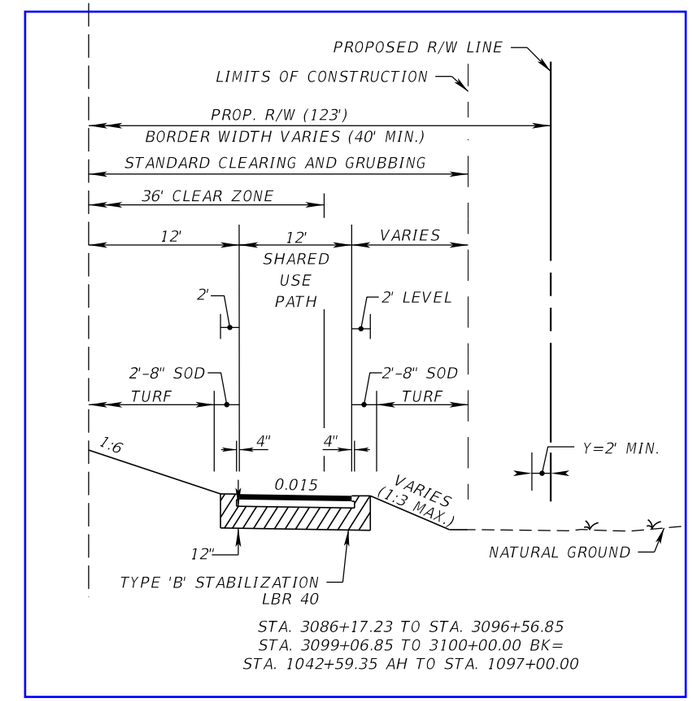

STA. 3086+17.23 TO STA. 3096+56.85
STA. 3099+06.85 TO 3100+00.00 BK=
STA. 1042+59.35 AH TO STA. 1097+00.00

Typical Section Drop Down

NOTE:

(1) "Y" THE AREA DISTURBED BY CONSTRUCTION VARIES.

(2) SEE TYPICAL SECTION DETAIL (2) FOR ADDITIONAL SHOULDER VARIATIONS.

NEW CONSTRUCTION

OPTIONAL BASE GROUP 9 WITH
TYPE SP STRUCTURAL (TRAFFIC C) (4") AND
FRICTION COURSE FC-5 (¾") PG 76-22

SHOULDER PAVEMENT

OPTIONAL BASE GROUP 4 WITH
TYPE SP STRUCTURAL (TRAFFIC C) (2")
FRICTION COURSE FC-5 (¾") PG 76-22

SHARED USE PATH

OPTIONAL BASE GROUP 1 WITH
TYPE SP STRUCTURAL (TRAFFIC B) (1½")

PAVED TURNOUT

OPTIONAL BASE GROUP 4 WITH
TYPE SP STRUCTURAL (TRAFFIC C) (2")

PAVED TURNOUT (FOREST ACCESS)

OPTIONAL BASE GROUP 9 WITH
TYPE SP STRUCTURAL (TRAFFIC C) (4")

UNPAVED TURNOUT

TYPE B STABILIZATION LBR 40

TRAFFIC DATA

CURRENT YEAR = 2019 AADT = N/A
ESTIMATED OPENING YEAR = 2025 AADT = 9,800
ESTIMATED DESIGN YEAR = 2045 AADT = 16,000
K = 9.5% D = 50% T = 22.50% (24 HOUR)
DESIGN HOUR T = 11.25%
DESIGN SPEED = 65 MPH

REVISIONS			
DATE	DESCRIPTION	DATE	DESCRIPTION

Kisinger Campo & Associates Corp.
111 N. Magnolia Ave., Suite 1050
Orlando, FL 32801
Florida Certificate of Authorization No. 02317
Engineer of Record: Kevin W. Tasillo
P.E. No.: 71411

STATE OF FLORIDA
DEPARTMENT OF TRANSPORTATION

ROAD NO.	COUNTY	FINANCIAL PROJECT ID
SR 50	SUMTER	435859-3-52-01

TYPICAL SECTION (2)

SHEET NO.

THE OFFICIAL RECORD OF THIS SHEET IS THE ELECTRONIC FILE DIGITALLY SIGNED AND SEALED UNDER RULE 61G15-23.004, F.A.C.

Exhibit "A-2"

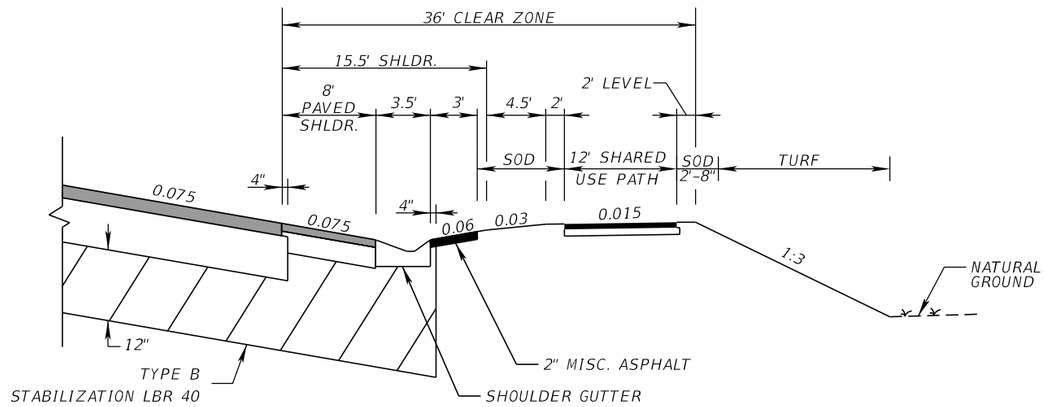

SHOULDER GUTTER AND SHARED USE PATH

℄ CONST. SR 50: STA. 1150+00.00 TO STA. 1169+00.00

DETAIL A

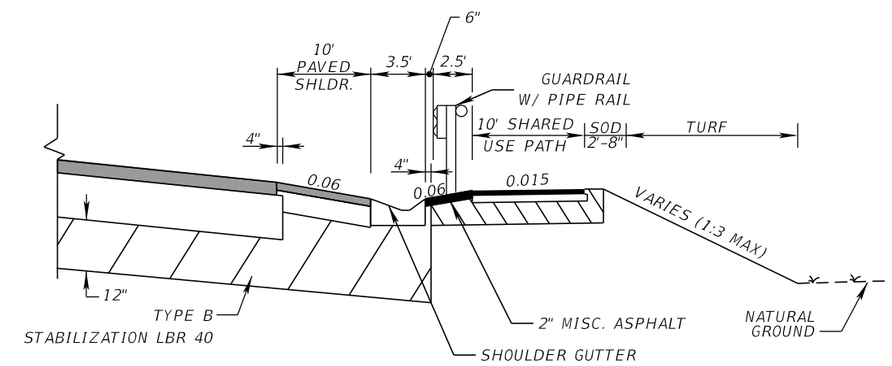

GUARDRAIL WITH SHOULDER GUTTER AND SHARED USE PATH

℄ CONST. SR 50: STA. 3091+53.80 TO STA. 3095+35.00

DETAIL B

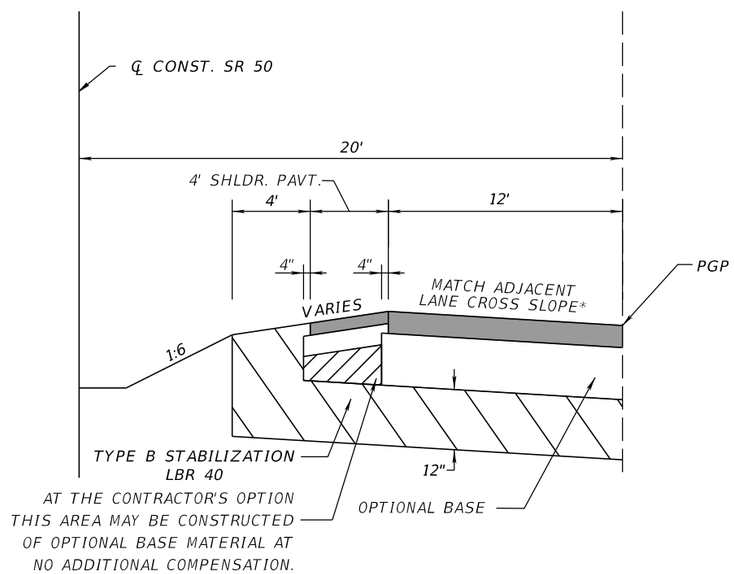

LEFT TURN LANE DETAIL

DETAIL CAN BE MIRRORED ABOUT THE ℄ CONST.

* LEFT TURN LANE DOES NOT MATCH THE ADJACENT LANES IN THE FOLLOWING LOCATIONS:

EB: STA. 1133+00.00 TO STA. 1137+00.00 - CROSS SLOPE = -0.037
WB: STA. 1150+00.00 TO STA. 1155+60.00 - CROSS SLOPE = +0.025
EB: STA. 1153+00.00 TO STA. 1158+00.00 - CROSS SLOPE = -0.025
EB: STA. 1169+20.00 TO STA. 1174+00.00 - CROSS SLOPE = -0.020

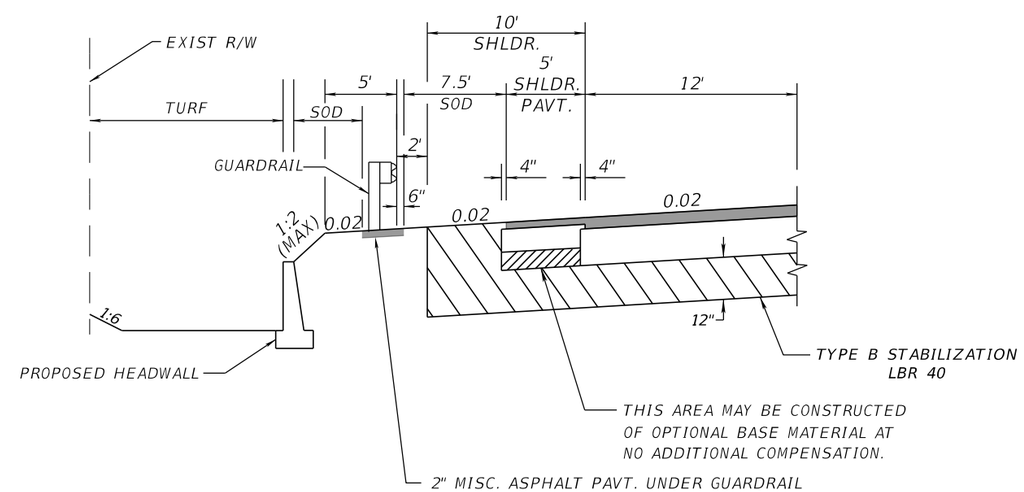

GUARDRAIL DETAIL WITH HEADWALL

SEE PLANS FOR LOCATIONS

REVISIONS			
DATE	DESCRIPTION	DATE	DESCRIPTION

Kisinger Campo & Associates Corp.
111 N. Magnolia Ave., Suite 1050
Orlando, FL 32801
Florida Certificate of Authorization No. 02317
Engineer of Record: Kevin W. Tasillo
P.E. No.: 71411

STATE OF FLORIDA
DEPARTMENT OF TRANSPORTATION

ROAD NO.	COUNTY	FINANCIAL PROJECT ID
SR 50	SUMTER	435859-3-52-01

TYPICAL SECTION DETAIL (2)

SHEET NO.

csprunger 1/3/2020 2:05:04 PM M:\43585935201 SR 50- Sub to DRMP\Design\roadway\TYPSRD02.DGN

THE OFFICIAL RECORD OF THIS SHEET IS THE ELECTRONIC FILE DIGITALLY SIGNED AND SEALED UNDER RULE 61G15-23.004, F.A.C.

Exhibit "B"
CONSTRUCTION PLANS
FM#435859-3-52-01

The Contract Plans for the construction of Department Project # 439859-3-52-01 (from the Hernando/ Sumter County Line to east of County Road 478A), are identified herein by attaching the cover sheet of said plans and by such, the entire set of Contract Plans are incorporated by reference.

CONTRACT PLANS COMPONENTS

ROADWAY PLANS
STURCTURES PLANS (NOT INCLUDED)
SIGNING AND PAVEMENT MARKING PLANS (NOT INCLUDED)

STATE OF FLORIDA
DEPARTMENT OF TRANSPORTATION

CONTRACT PLANS

FINANCIAL PROJECT ID 435859-3-52-01

SUMTER COUNTY (18030)

STATE ROAD NO. 50

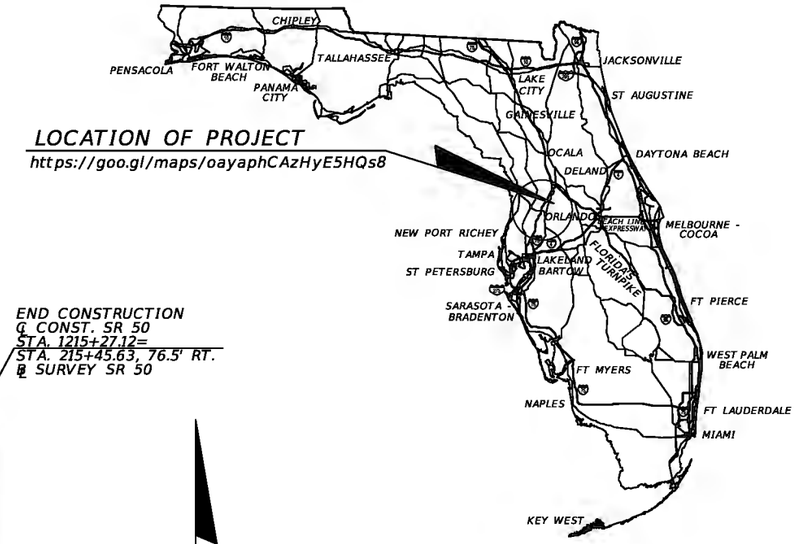

LOCATION OF PROJECT
https://goo.gl/maps/oayaphCAzHyE5HQs8

INDEX OF ROADWAY PLANS

SHEET NO.	SHEET DESCRIPTION
1	KEY SHEET
1A	NOTES TO REVIEWERS
2	SIGNATURE SHEET
3-6	SUMMARY OF PAY ITEMS
7-15	DRAINAGE MAPS
16	EXISTING DRAINAGE STRUCTURES
17-20	TYPICAL SECTIONS
21-28	TYPICAL SECTION DETAILS
29-38	SUMMARY OF DRAINAGE STRUCTURES
39	OPTIONAL MATERIALS TABULATION
40-46	PROJECT CONTROL SHEETS
47	GENERAL NOTES
48-75	ROADWAY PLAN SHEETS
76-103	ROADWAY PROFILE SHEETS
104-108	SIDESTREET PLAN/PROFILE SHEETS
109-115	SHARED USE PATH PROFILES
116-127	INTERSECTION DETAIL SHEETS
128-129	CUL-DE-SAC DETAIL SHEETS
130-172	DRAINAGE STRUCTURES
173	DRAINAGE DETAILS
174-177	POND DETAILS
178-179	SOIL SURVEY SHEETS
180-188	MUCK DELINEATION SHEETS
189-254	ROADWAY CROSS SECTIONS SHEETS
255-272	SIDE STREET CROSS SECTIONS
273-284	DRIVEWAY CROSS SECTIONS
285-312	POND & FPC CROSS SECTIONS
313-315	STORMWATER POLLUTION PREVENTION PLAN
316-348	EROSION CONTROL SHEETS
349-447	TEMPORARY TRAFFIC CONTROL PLANS
448-475	UTILITY ADJUSTMENT SHEETS
SQ-1 TO SQ-34	SUMMARY OF QUANTITIES
BQ-1 TO B3-6	MISCELLANEOUS STRUCTURES

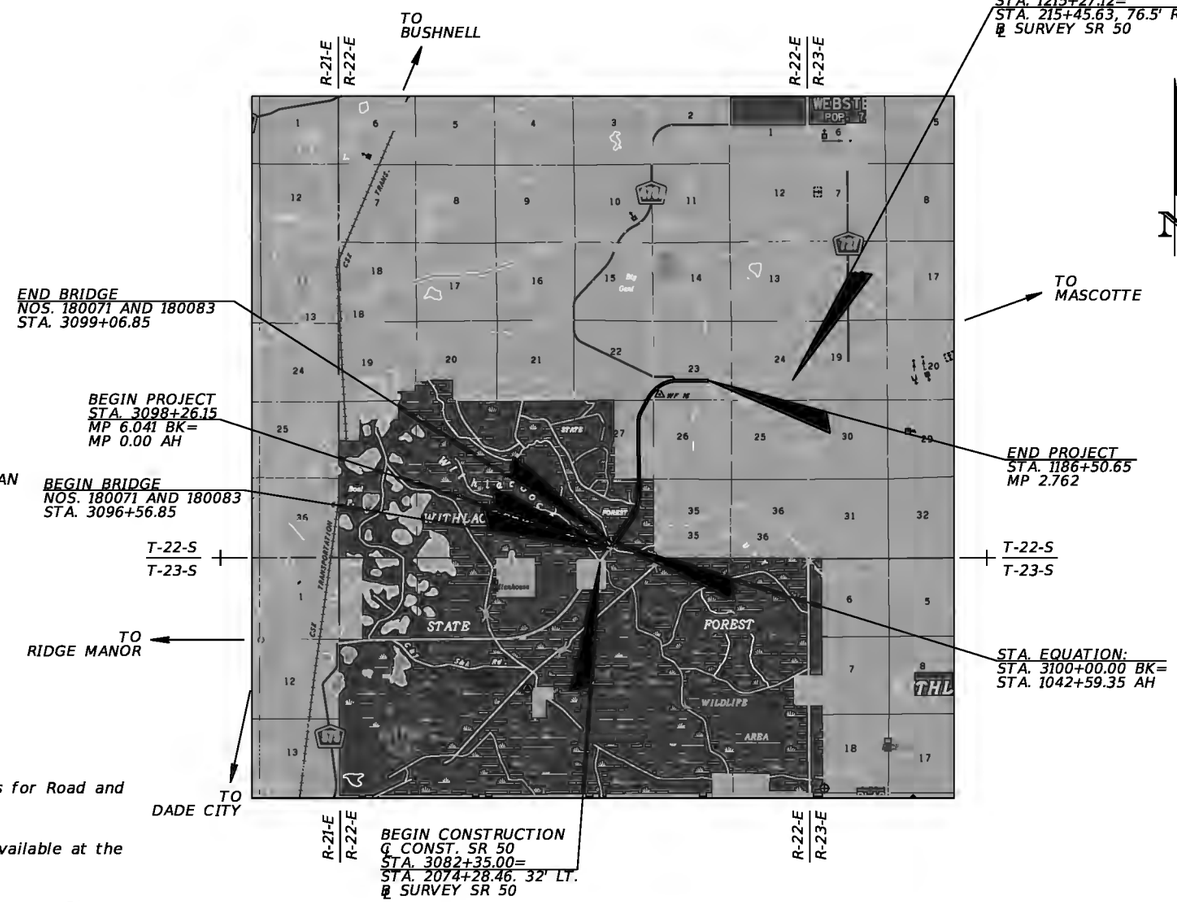

NOTE: MP LIMITS ARE BASED OFF BASELINE OF SURVEY STATIONING.

PHASE III SUBMITTAL
FEBRUARY 2020

ROADWAY PLANS ENGINEER OF RECORD:

KEVIN TASILLO, P.E.
P.E. NO.: 71411
KISINGER CAMPO & ASSOCIATES CORP.
111 N MAGNOLIA AVE, SUITE 1050
ORLANDO, FL 32801
CONTRACT NO.: C-9P75
VENDOR NO.: 59-1677145

FDOT PROJECT MANAGER:

JUDE-JEAN FRANCOIS

GOVERNING STANDARD PLANS:

Florida Department of Transportation, FY2019-20 Standard Plans for Road and Bridge Construction and applicable Interim Revisions (IRs).

Standard Plans for Road Construction and associated /Rs are available at the following website: http://www.fdot.gov/design/standardplans

Standard Plans for Bridge Construction are included in the Structures Plans Component.

GOVERNING STANDARD SPECIFICATIONS:

Florida Department of Transportation, July 2019 Standard Specifications for Road and Bridge Construction at the following website: http://www.fdot.gov/programmanagement/Implemented/SpecBooks

CONSTRUCTION CONTRACT NO.	FISCAL YEAR	SHEET NO.
TBD	22	1

THE OFFICIAL RECORD OF THIS SHEET IS THE ELECTRONIC FILE DIGITALLY SIGNED AND SEALED UNDER RULE 61G15-23.004, F.A.C.

Exhibit "C"
AGENCY RESOLUTION
FM#: 435859-3-52-01

The agency Resolution authorizing entry into this Agreement is attached and incorporated into this Agreement.

RESOLUTION NO 2020-____

ON MOTION of Commissioner _____, seconded by Commissioner _____, the following Resolution was adopted:

WHEREAS, the State of Florida Legislature has approved and mandated the Florida Department of Transportation (DEPARTMENT) to complete various projects included in the DEPARTMENT'S Work Program; and

WHEREAS, the DEPARTMENT has jurisdiction over and maintains State Road 50 from the Hernando/Sumter County Line to East of County Road 478A as part of the State Highway System; and

WHEREAS, the DEPARTMENT agrees to allow the Multi-Use Trail Project to be constructed and operated within the Right of Way only under certain conditions necessary to protect the traveling public; and

WHEREAS, the DEPARTMENT has made application to Sumter County (COUNTY) to formally commit to permanent, perpetual maintenance of the Multi-Use Trail Project.

NOW, THEREFORE, for and in consideration of the mutual benefits to flow each to the other, the parties covenant and agree as follows:

1. The DEPARTMENT hereby agrees to construct or cause to be constructed the Multi-Use Trail Project as depicted in the Construction Plans and Specifications of the DEPARTMENT'S FPID #435859-3-52-01 SR 50 from the Hernando/Sumter County Line to East of County Road 478A.

2. The County acknowledges that the DEPARTMENT will require the County to maintain the entire Multi-Use Trail Project, in perpetuity, according to the DEPARTMENT standards in effect on the date of this agreement.

NOW, THEREFORE, BE IT RESOLVED by the Board of County Commissioners of Sumter County, that the application of the DEPARTMENT to the COUNTY for the perpetual Maintenance Memorandum of Agreement for the On-System Multi-Use Trail Project should be drawn and executed by _____, on behalf of this Board of County Commissioners.

NOW, THEREFORE, BE IT RESOLVED by the Board of Sumter Commissioners as follows:

1. That this Resolution is transmitted to the DEPARTMENT.

2. This Resolution shall be effective upon passage by the Sumter County Board of County Commissioners.

PASSED AND ADOPTED BY THE BOARD OF COUNTY COMMISSIONERS OF SUMTER COUNTY, this _____ day of _____, 2020.

ATTEST:

Board of County Commissioners of Sumter County, FL

_____

Caroline Alrestimawi, Deputy Clerk

_____

Steve Printz, Chairman

SUMTER COUNTY BOARD OF COUNTY COMMISSIONERS
EXECUTIVE SUMMARY

SUBJECT: **Memorandum of Agreement for Architectural Services Between Sumter County Board of County Commissioners and City of Webster, Florida (Staff Recommends Approval).**

REQUESTED ACTION: **Staff Recommends Approval**

Meeting Type: Regular Meeting **DATE OF MEETING:** **5/12/2020**

CONTRACT: ☒ N/A Vendor/Entity:
Effective Date: Termination Date:
Managing Division / Dept: Choose a division or department.

BUDGET IMPACT: NA
FUNDING SOURCE: NA
Type: N/A **EXPENDITURE ACCOUNT:** NA

HISTORY/FACTS/ISSUES:

County contracted with the architecture firm The Lunz Group for on-call architectural services. Webster requires conceptual design and cost estimates from an architectural firm to apply for grant funds for the improvement of city facilities within the grant deadline. The grant deadline does not provide sufficient time for Webster to meet the statutory requirement to procure architectural services.

Prepared by: **Charlene Pittman** **Grammarly Check** ☒

Memorandum of Agreement for

Architectural Services

This Memorandum of Agreement between the Sumter County Board of County Commissioners, a political subdivision of the State of Florida, 7375 Powell Rd, Suite 200, Wildwood, Florida 34785, hereafter referred to as the "County" and the municipal government of the City of Webster, Florida, 85 E Central Ave, Webster, FL 33597, hereafter known as "Webster."

WITNESSETH:

WHEREAS, County contracted with the architecture firm The Lunz Group for on-call architectural services, and

WHEREAS, Webster requires conceptual design and cost estimates from an architectural firm to apply for grant funds for the improvement of city facilities within the grant deadline, and

WHEREAS, the grant deadline does not provide sufficient time for Webster to meet the statutory requirement to procure architectural services, and

NOW, THEREFORE, in consideration of the covenants herein contained, be it mutually agreed by the parties as follows:

1. County agrees to use its contracted services to support Webster's needs.

2. Webster agrees to reimburse County for its contracted costs for the provision of architectural services for Webster's current project represented in the task order developed with the concurrence of Webster and approved by County.

3. Webster agrees to remit payment within thirty days of receipt of the County's invoice.

4. **IF THE CITY HAS QUESTIONS REGARDING THE APPLICATION OF CHAPTER 119, FLORIDA STATUTES, TO THE CITY'S DUTY TO PROVIDE PUBLIC RECORDS RELATING TO THIS AGREEMENT, CONTACT THE CUSTODIAN OF PUBLIC RECORDS AT 352-689-4400, Sumter County Board of County Commissioners, 7375 Powell Road, Wildwood, Florida 34785 or via email at Administrative.Services@sumtercountyfl.gov.**

ATTEST: GLORIA HAYWARD
CLERK AND AUDITOR

_____
By: Caroline AlRestimawi, Deputy Clerk

BOARD OF COUNTY COMMISSIONERS
OF SUMTER COUNTY, FLORIDA

_____
By: Steve Printz, Chairman

ATTEST: AMY FLOOD
CITY CLERK

_____
By: Amy Flood, City Clerk

CITY OF WEBSTER, FLORIDA

_____
By: Bobby Yost, Mayor

SUMTER COUNTY BOARD OF COUNTY COMMISSIONERS
EXECUTIVE SUMMARY

SUBJECT: Affordable Housing (AH) Program Request to Execute a Partial Release of Mortgage for John and Valerie Elison (Staff Recommends Approval).

REQUESTED ACTION: **Staff Recommends Approval.**

Meeting Type: Regular Meeting **DATE OF MEETING:** **5/12/2020**

CONTRACT: ☒ N/A Vendor/Entity:
Effective Date: Termination Date:
Managing Division / Dept.: **Housing / Economic Development**

BUDGET IMPACT: N/A
FUNDING SOURCE: Affordable Housing Program

Type: N/A **EXPENDITURE ACCOUNT:** **N/A**

HISTORY/FACTS/ISSUES:

The Affordable Housing Program was created to comply with Florida Statutes § 125.379. The funds are used for various housing projects, including demolition/reconstruction of substandard homes, emergency repair, and purchase assistance. Demolition/reconstruction and emergency repair strategies are for applicants who currently own and occupy the residence. Purchase assistance is for first-time homebuyers who will occupy a home in the county. The assistance is provided in the form of a zero percent interest loan secured by a mortgage and note with monthly repayments required.

John and Valerie Elison received assistance for home repairs on January 8, 2013. The assistance was secured by a recorded mortgage and note against the property located at 8481 CR 636, Bushnell, FL 33513. Staff received a request to execute a Partial Release of Mortgage to release Lot 69 as it was included in the mortgage in error. Information content in the current existing mortgage was not altered otherwise.

Staff is requesting the execution of the Partial Release of Mortgage for John and Valerie Elison.

Prepared by: **Denna Lafferty** **Grammarly Check** ☒

Prepared by and Return to:
Sumter County Housing Services
319 East Anderson Avenue, Suite 103
Bushnell, FL 33513

PARTIAL RELEASE OF MORTAGE
Sumter County Affordable Housing (AH) Program

KNOW ALL MEN BY THESE PRESENTS:

WHEREAS, JOHN D. ELISON AND VALERIE F. ELISON, husband and wife, (hereinafter referred to as "Mortgagor") by Indenture of that certain Mortgage and Security Agreement, recorded January 24, 2013, in Official Records Book 2554, Pages 773-777, Public Records of Sumter County, Florida (the "Mortgage") granted and conveyed unto SUMTER COUNTY BOARD OF COMMISSIONERS (hereinafter referred to as "Mortgagee"), and its assigns, the premises therein particularly described, hereinafter referred to as the "Mortgaged Premises":

Lots 68 and 69 of JERRY TAYLOR LANDING, subdivision, as per plat thereof recorded in Plat Book 3, Page 34, Public Records of Sumter County, Florida.

AND WHEREAS, Mortgagor has requested that Mortgagee release that portion of the Mortgaged Premises lying within and being a part of the property described hereinafter referred to as the "Released Property" from the lien and operation of said Mortgage:

NOW, THEREFORE, Mortgagee, for and in consideration of the premises hereof and of the sum of Ten and 00/100 ($10.00), to it in hand paid by, or on behalf of, Mortgagor at the time of execution hereof, the receipt and sufficiency of which is hereby acknowledged, does remise, release, quit-claim, exonerate and discharge from the lien and operation of the Mortgaged Premise lying within the being a part of the property more particularly described as follows:

Lot 69 of JERRY TAYLOR LANDING, subdivision, as per plat thereof recorded in Plat Book 3, Page 34, Public Records of Sumter County, Florida.

This Partial Release of Mortgage is to release Lot 69, the undersigned releases from the lien and operation of mortgage executed by (Mortgagor) to (Mortgagee) said recorded in Official Records Book 2554, Pages 773-777, only the above-stated portion of the mortgaged real estate. The undersigned retains a lien upon the balance of the premises not previously released that is described in said mortgage and certifies that the undersigned has the right to release said mortgage.

TO HAVE AND TO HOLD, the same, with the appurtenances, unto Mortgagor, its successors and assigns forever, freed, exonerated and discharged of and from the lien of the Mortgage and other Loan Documents, if any, and that part of "Released Property" and without impairing the lien of the remaining portion of the property and further states: that nothing herein shall in any way impair, alter or diminish the effect, lien or encumbrances of the Mortgage and the Loan Documents on the remainder of the Mortgaged Premises no hereby released by therefrom, or any of the rights and remedies of the holder therefore.

WITNESS my hand and seal this 12th day of May, A.D. 2020.

Signed, Sealed and Delivered

SUMTER COUNTY BOARD OF COMMISSIONERS

_____
Witness Signature

By: _____ L.S.
Steve Printz, Chairman

_____
Type or Print Witness Name

_____
Witness Signature

_____
Type or Print Witness Name

STATE OF FLORIDA
COUNTY OF SUMTER

The foregoing instrument was acknowledged before me this 12th day of May, 2020 by the CHAIRMAN on behalf of the SUMTER COUNTY BOARD OF COUNTY COMMISSIONERS, who is _____ personally known to me or who has produced _____ driver's license(s) as identification.

_____
Notary Public
Commission # _____
My Commission Expires: _____

SUMTER COUNTY BOARD OF COUNTY COMMISSIONERS
EXECUTIVE SUMMARY

SUBJECT: **Satisfaction of Civil Restitution Lien for Cymande Kharriem Jacobs Adewusi**

REQUESTED ACTION: **Staff Recommends Approval**

Meeting Type: Regular Meeting **DATE OF MEETING:** **5/12/2020**

CONTRACT: x N/A Vendor/Entity:
Effective Date: Termination Date:
Managing Division / Dept: Choose a division/department.

BUDGET IMPACT: None
FUNDING SOURCE:

Type: Select impact type **EXPENDITURE ACCOUNT:**

HISTORY/FACTS/ISSUES:

On November 19, 2019 a Civil Restitution Lien for case 2019 CF 300 was ordered in the amount of $50.00, for Cymande Kharriem Jacobs Adewusi. On April 24, 2020, County Finance received cash in the amount of $50.00, to satisfy the balance of said lien.

Prepared by: **Melissa Elliott, Deputy Clerk County Finance** **Grammarly Check** ☐

IN THE CIRCUIT COURT OF THE 5TH JUDICIAL IN AND FOR

SUMTER COUNTY, FLORIDA

Criminal Case No: 2019 CF 300

STATE OF FLORIDA

VS.

CYMANDE KHARRIEM JACOBS ADEWUSI

Defendant

_____

SATISFACTION OF CIVIL RESTITUTION LIEN ORDER

KNOW ALL MEN BY THESE PRESENT: that the Board of County Commissioners of Sumter County, Florida, holder of a Civil Restitution Lien against the Defendant named above in the amount of $50.00, pursuant to an Order for determination of damages and losses and for Civil Restitution Lien Order rendered by the county court of Sumter County on November 19, 2019 and recorded in official records book 3675 page 502 of the public records of Sumter County, Florida, does hereby acknowledge full payment and satisfaction thereof and hereby consents that the same shall be satisfied of record.

Witness the hand and seal of the duly authorized officer of the Board of County Commissioners of Sumter County, Florida this _____ day of _____ , 20___.

ATTEST: GLORIA R. HAYWARD

Clerk of Circuit Court

_____

By Deputy Clerk

_____

As Chairman of
Board of County Commissioners
Sumter County, Florida

STATE OF FLORIDA

COUNTY OF SUMTER

I HEREBY CERTIFY that on this day, before me, an officer duly authorized in the state aforesaid and in the County aforesaid to take acknowledgments, personally appeared _____.

WITNESS my hand and official seal in the county and state last aforesaid this _____ day of _____, 20___.

_____

Notary Public, State of Florida

My Commission expires _____

Personally Known _____ OR Produced Identification

Type of Identification Produced _____

IN THE FIFTH JUDICIAL CIRCUIT IN
AND FOR SUMTER COUNTY, FLORIDA

2019 DEC 12 PM 3:32
GLORIA R. HAYWARD
CLERK OF CIRCUIT COURT

STATE OF FLORIDA	COURT:	CIRCUIT
VS	DIVISION:	FELONY
CYMANDE KHARRIEM JACOBS ADEWUSI	CASE NO:	2019 CF 300

PO BOX 2666
BUSHNELL, FL 33513-

CIVIL RESTITUTION LIEN ORDER

THIS CAUSE having been heard before the Court on this **19TH DAY OF NOVEMBER 2019** by the undersigned, who has imposed sentence on a criminal matter and being fully advised in the premises, does hereby

ORDERED AND ADJUDGED as follows:

This Court has jurisdiction over the subject matter and parties to this cause, pursuant to Florida Statutes 960.293(2) (determination of damages and losses). Sumter County, Florida, 215 E. McCollum Avenue, Bushnell, Florida 33513, or the State of Florida shall recover from Defendant above, the sum of **$50.00** plus interest accruing at the legal rate from the date of this Order shall constitute a civil restitution lien, for which let execution issue.

DONE AND ORDERED, in open court, at Bushnell, Sumter County, Florida on this
19TH DAY OF NOVEMBER 2019

William Hallman

Judge of Circuit Court

Certificate of Service

I HEREBY CERTIFY that a true copy hereof has been furnished to: Board of County Commissioners c/o Clerk of the Circuit Court and the defendant at the above address, by U.S. Mail, on this 12 day of December, 2019.

GLORIA R. HAYWARD, CLERK OF COURT
BY: Christiane Gatcher D.C.

COUNTY AND CIRCUIT COURT SUUM CUIQUE SUMTER COUNTY, FLORIDA

CIRCUIT COURT CLERK SUUM CUIQUE SUMTER COUNTY FLORIDA

STATE OF FLORIDA, COUNTY OF SUMTER
I HEREBY CERTIFY, that the above and foregoing is a true copy of the original
GLORIA R. HAYWARD, Clerk of Circuit Court
By C Gatcher Deputy Clerk
Dated 12-18-19

125750

Board of Sumter County Commissioners
215 E McCollum Ave. • Bushnell, FL 33513

RECEIVED from: Cyman de Jacobs Andewusi Date 4/24/2020

FOR: Civil Rest. Lien 2019 CF 300 payoff cash $ 50.00

$

Clerk of courts OFFICER

By MCCoff D.C. TOTAL $ 50.00

SUMTER COUNTY BOARD OF COUNTY COMMISSIONERS
EXECUTIVE SUMMARY

SUBJECT: **Satisfaction of Civil Restitution Lien for Debra Leonard Hunt**

REQUESTED ACTION: **Staff Recommends Approval**

Meeting Type: Regular Meeting **DATE OF MEETING:** **5/12/2020**

CONTRACT: x N/A Vendor/Entity:
Effective Date: Termination Date:
Managing Division / Dept: Choose a division/department.

BUDGET IMPACT: None
FUNDING SOURCE:

Type: Select impact type **EXPENDITURE ACCOUNT:**

HISTORY/FACTS/ISSUES:

On May 22, 2019 a Civil Restitution Lien for case 2017 CF 1028 was ordered in the amount of $50.00, for Debra Leonard Hunt. May 1, 2020, County Finance received cash in the amount of $50.00, to satisfy the balance of said lien.

Prepared by: **Melissa Elliott, Deputy Clerk County Finance** **Grammarly Check** ☐

IN THE CIRCUIT COURT OF THE 5TH JUDICIAL IN AND FOR

SUMTER COUNTY, FLORIDA

Criminal Case No: 2017 CF 1028

STATE OF FLORIDA

VS.

DEBRA LEONARD HUNT

Defendant

_____

SATISFACTION OF CIVIL RESTITUTION LIEN ORDER

KNOW ALL MEN BY THESE PRESENT: that the Board of County Commissioners of Sumter County, Florida, holder of a Civil Restitution Lien against the Defendant named above in the amount of $50.00, pursuant to an Order for determination of damages and losses and for Civil Restitution Lien Order rendered by the county court of Sumter County on May 22, 2019 and recorded in official records book 3579 page 300 of the public records of Sumter County, Florida, does hereby acknowledge full payment and satisfaction thereof and hereby consents that the same shall be satisfied of record.

Witness the hand and seal of the duly authorized officer of the Board of County Commissioners of Sumter County, Florida this _____ day of _____ , 20___.

ATTEST: GLORIA R. HAYWARD

Clerk of Circuit Court

_____

By Deputy Clerk

_____

As Chairman of
Board of County Commissioners
Sumter County, Florida

STATE OF FLORIDA

COUNTY OF SUMTER

I HEREBY CERTIFY that on this day, before me, an officer duly authorized in the state aforesaid and in the County aforesaid to take acknowledgments, personally appeared _____.

WITNESS my hand and official seal in the county and state last aforesaid this _____ day of _____, 20___.

_____

Notary Public, State of Florida

My Commission expires _____

Personally Known _____ OR Produced Identification

Type of Identification Produced _____

Gloria R. Hayward, Sumter County Clerk of Court
Inst: 201960022436 Date: 06/07/2019 Time: 3:19PM
Page 1 of 1 B: 3579 P: 300 By: BO

IN THE FIFTH JUDICIAL CIRCUIT IN
AND FOR SUMTER COUNTY, FLORIDA

STATE OF FLORIDA	COURT:	CIRCUIT
VS	DIVISION:	FELONY
DEBRA LEONARD HUNT	CASE NO:	2017 CF 1028
PO BOX 1741		
BUSHNELL, FL 33513-		

CIVIL RESTITUTION LIEN ORDER

THIS CAUSE having been heard before the Court on this **22ND DAY OF MAY 2019** by the undersigned, who has imposed sentence on a criminal matter and being fully advised in the premises, does hereby

ORDERED AND ADJUDGED as follows:

This Court has jurisdiction over the subject matter and parties to this cause, pursuant to Florida Statutes 960.293(2) (determination of damages and losses). Sumter County, Florida, 215 E. McCollum Avenue, Bushnell, Florida 33513, or the State of Florida shall recover from Defendant listed above, the sum of **$50.00** plus interest accruing at the legal rate from the date of this Order shall constitute a civil restitution lien, for which let execution issue.

DONE AND ORDERED, in open court, at Bushnell, Sumter County, Florida on this
22ND DAY OF MAY 2019

William Hallman
Judge of Circuit Court

Certificate of Service

I HEREBY CERTIFY that a true copy hereof has been furnished to: Board of County Commissioners c/o Clerk of the Circuit Court and the defendant at the above address, by U.S. Mail, on this 5 day of June, 2019.

GLORIA R. HAYWARD, CLERK OF COURT
Christiane Gatcher
D.C.

FILED IN THE OFFICE OF CLERK OF CIRCUIT COURT SUMTER COUNTY, FLA.
2019 JUN -6 P 3:40
GLORIA R. HAYWARD CLERK CIRCUIT COURT
D.C.

STATE OF FLORIDA, COUNTY OF SUMTER
I HEREBY CERTIFY, that the above and foregoing is a true copy of the original
GLORIA R. HAYWARD, Clerk of Circuit Court
By Deputy Clerk
Dated 6-7-19

Board of Sumter County Commissioners 125761

215 E McCollum Ave. • Bushnell, FL 33513

RECEIVED from: Debra Hunt Date 5/1/20

FOR: 2017-CF-1028 $ 50.00

Cure restitution lien $

Clk of Court OFFICER

By C Connell TOTAL $ 50.00

SUMTER COUNTY BOARD OF COUNTY COMMISSIONERS
EXECUTIVE SUMMARY

SUBJECT: **Satisfaction of Civil Restitution Lien for James Nicholas Vassaur**

REQUESTED ACTION: **Staff Recommends Approval**

Meeting Type: Regular Meeting **DATE OF MEETING:** **5/12/2020**

CONTRACT: x N/A Vendor/Entity:
Effective Date: Termination Date:
Managing Division / Dept: Choose a division/department.

BUDGET IMPACT: None
FUNDING SOURCE:

Type: Select impact type **EXPENDITURE ACCOUNT:**

HISTORY/FACTS/ISSUES:

On February 14, 2018 a Civil Restitution Lien for case 2017 CF 1264 was ordered in the amount of $50.00, for James Nicholas Vassaur. May 5, 2020, County Finance received check #2560 in the amount of $50.00, to satisfy the balance of said lien.

Prepared by: **Melissa Elliott, Deputy Clerk County Finance** **Grammarly Check** ☐

IN THE CIRCUIT COURT OF THE 5TH JUDICIAL IN AND FOR

SUMTER COUNTY, FLORIDA

Criminal Case No: 2017 CF 1264

STATE OF FLORIDA

VS.

JAMES NICHOLAS VASSAUR

Defendant

_____

SATISFACTION OF CIVIL RESTITUTION LIEN ORDER

KNOW ALL MEN BY THESE PRESENT: that the Board of County Commissioners of Sumter County, Florida, holder of a Civil Restitution Lien against the Defendant named above in the amount of $50.00, pursuant to an Order for determination of damages and losses and for Civil Restitution Lien Order rendered by the county court of Sumter County on February 14, 2018 and recorded in official records book 3413 page 333 of the public records of Sumter County, Florida, does hereby acknowledge full payment and satisfaction thereof and hereby consents that the same shall be satisfied of record.

Witness the hand and seal of the duly authorized officer of the Board of County Commissioners of Sumter County, Florida this _____ day of _____ , 20___.

ATTEST: GLORIA R. HAYWARD

Clerk of Circuit Court

_____

By Deputy Clerk

_____

As Chairman of
Board of County Commissioners
Sumter County, Florida

STATE OF FLORIDA

COUNTY OF SUMTER

I HEREBY CERTIFY that on this day, before me, an officer duly authorized in the state aforesaid and in the County aforesaid to take acknowledgments, personally appeared _____.

WITNESS my hand and official seal in the county and state last aforesaid this _____ day of _____, 20___.

_____

Notary Public, State of Florida

My Commission expires _____

Personally Known _____ OR Produced Identification

Type of Identification Produced _____

Inst:201860018025 Date:5/16/2018 Time:11:17 AM
DC,Gloria R. Hayward,Sumter County Page 1 of 1 B:3413 P:333

IN THE FIFTH JUDICIAL CIRCUIT IN
AND FOR SUMTER COUNTY, FLORIDA

STATE OF FLORIDA	COURT:	CIRCUIT
VS	DIVISION:	FELONY
JAMES NICHOLAS VASSAUR	CASE NO:	2017 CF 1264
1415 GARVIN CT		
CANTONMENT, FL 32533-		

CIVIL RESTITUTION LIEN ORDER

THIS CAUSE having been heard before the Court on this **14TH DAY OF FEBRUARY 2018** by the undersigned, who has imposed sentence on a criminal matter and being fully advised in the premises, does hereby

ORDERED AND ADJUDGED as follows:

This Court has jurisdiction over the subject matter and parties to this cause, pursuant to Florida Statutes 960.293(2) (determination of damages and losses). Sumter County, Florida, 215 E. McCollum Avenue, Bushnell, Florida 33513, or the State of Florida shall recover from Defendant listed above, the sum of **$50.00** plus interest accruing at the legal rate from the date of this Order shall constitute a civil restitution lien, for which let execution issue.

DONE AND ORDERED, in open court, at Bushnell, Sumter County, Florida on this
14TH DAY OF FEBRUARY 2018

Judge of Circuit Court

2018 MAY -8 PM 12:18
GLORIA R. HAYWARD
CLERK OF CIRCUIT COURT

Certificate of Service

I HEREBY CERTIFY that a true copy hereof has been furnished to: Board of County Commissioners c/o Clerk of the Circuit Court and the defendant at the above address, by U.S. Mail, on this 9 day of May, 2018.

GLORIA R. HAYWARD, CLERK OF COURT
BY: Christiane Hatcher D.C.

CIRCUIT COURT CLERK SUMTER COUNTY FLORIDA

STATE OF FLORIDA, COUNTY OF SUMTER
I HEREBY CERTIFY, that the above and foregoing is a true copy of the original
GLORIA R. HAYWARD, Clerk of Circuit Court
By Chatcher Deputy Clerk
Dated 5-15-18

NAVY FEDERAL Credit Union

PO Box 3000
Merrifield, VA 22119-3000
navyfederal.org

68-7497
2560

Cashier's Check

Serial No.	Account No.	Date	Amount
0449141819	3099445532	04/29/20	$**********50.00

Pay to the Order of SUMTER COUNTY BOCC

REMITTER: JAMES N VASSAUR
Case #: 17CF1264

Authorized Signature

© 2014 Navy Federal NFCU C36 (6-14)

SUMTER COUNTY BOARD OF COUNTY COMMISSIONERS
EXECUTIVE SUMMARY

SUBJECT: State Housing Initiatives Partnership (SHIP) Request to Approve the Technical Revision to the Local Housing Assistance Plan (LHAP) for State FY 2019/2020, 2020/2021, 2021/2022 (Staff Recommends Approval).

REQUESTED ACTION: **Staff Recommends Approval.**

Meeting Type: Regular Meeting **DATE OF MEETING:** **5/12/2020**

CONTRACT: ☒ N/A Vendor/Entity:
Effective Date: Termination Date:
Managing Division / Dept.: **Housing / Economic Development**

BUDGET IMPACT: N/A
FUNDING SOURCE:
SHIP 2019/2020, 2020/2021, 2021/2022
Type: N/A **EXPENDITURE ACCOUNT:** **N/A**

HISTORY/FACTS/ISSUES:

The State Housing Initiatives Partnership (SHIP) is a program created through a dedicated trust fund for housing. The funds are distributed through the Florida Housing Finance Corporation and are based on revenues from Documentary Stamps for all approved counties and entitlement cities in Florida. Revenue is also generated from payments made by previous housing recipients.

Sumter County is required to develop a new Local Housing Assistance Plan (LHAP) every three years to comply with Florida Statutes § 420.9075. The Board of Sumter County Commissioners (BOCC) approved the SHIP LHAP for State Fiscal Years 2019-2022, on January 22, 2019.

As required by Florida Housing Finance Corporation (FHFC), staff prepared a technical revision to the LHAP to include the recently adopted policy regarding the Local Government Contribution for developers applying for SAIL funding. FHFC requires any incentive offered by the local government regarding affordable housing to be included in the LHAP. The revision is located in Section III, Incentive Strategies, C. Other Incentive Strategies Adopted.

The technical revision also includes an increase in the maximum award amount for the demolition/reconstruction strategy based on the following factors:

1. Inflation, as reflected in an increase in the consumer price index of 2.5% in the 12 months ending January 2020 (BLS.gov/CPI).

2. The cost for constructing a custom-built residential house is averaging $85 to $111 a square foot, according to the declared values from residential single-family combo finalized permits for the period 2/1/2019 through 2/26/2020 as listed in Sumter County's Development Services Division records. Our cost allotment is considerably lower as our specifications, home sizes are designed for maximum economy, and our maximum amount of $95,000 includes all construction activities, not just constructing the house (i.e., demolition, septic systems, water connection, site clearing, boundary

survey, site evaluations, mortgage recording fees, etc.). Based on $95,000, the average cost for our largest house is $71 a square foot and includes all other expenses necessary to complete the project.

3. Construction industry activity is elevated regionally but exceptionally robust in Sumter County; this situation has increased labor costs due to strong demand. In addition, construction supplies and materials have increased 4.8 points on the Federal Reserve Bank of St. Louis Producer Price Index between January 2019 and January 2020.

4. It has been challenging to attract contractors interested in bidding on our projects, possibly due to our projects not producing a reasonable amount of profit margin.

The maximum award amount will increase to $100,000.00 from $95,000.00. The revision is located in Section II, Housing Strategies, B. Demolition/Reconstruction, C. Maximum Award Amount.

No informational content in the LHAP was altered otherwise.

The LHAP technical revision will be presented to the Affordable Housing Advisory Committee (AHAC) at their next regularly scheduled meeting.

Housing Services is requesting approval of the technical revision to the LHAP 2019-2022.

Prepared by:	**Denna Lafferty**	**Grammarly Check**	☒

Sumter County Board of County Commissioners

Housing Services

SHIP LOCAL HOUSING ASSISTANCE PLAN (LHAP)

2019-2020, 2020-2021, 2021-2022

Adopted: January 22, 2019

Effective: July 1, 2019

Technical Revision:

Table of Contents

Description	Page #
Section I, Program Details	**3-8**
Section II, Housing Strategies	**9**
A. Emergency Repair	**9-10**
B. Demolition/Reconstruction	**11-13**
C. Purchase Assistance without Rehabilitation	**14-15**
D. Disaster Repair/Mitigation	**16**
Section III, Incentive Strategies	**17**
A. Expedited Permitting	**17**
B. Ongoing Review Process	**17**
C. Other Incentive Strategies Adopted	**18-19**
Exhibits	**19**
A. Administrative Budget for each fiscal year covered in the Plan B. Timeline for Estimated Encumbrance and Expenditure C. Housing Delivery Goals Chart (HDGC) For Each Fiscal Year Covered in the plan D. Signed LHAP Certification E. Signed, dated, witnessed or attested adopting resolution F. Ordinance: (If changed from the original creating ordinance) G. Interlocal Agreement	

I. Program Details:

A. LG(s)

Name of Local Government	Sumter County Board of County Commissioners
Does this LHAP contain an interlocal agreement?	No
If yes, the name of other local government(s)	N/A

B. Purpose of the program:

- To meet the housing needs of the very low, low and moderate-income households;
- To expand the production of and preserve affordable housing; and
- To further the housing element of the local government comprehensive plan specific to affordable housing.

C. Fiscal years covered by the Plan: 2019-2020, 2020-2021, 2021-2022

D. Governance: The SHIP Program is established in accordance with Section 420.907-9079, Florida Statutes and Chapter 67-37, Florida Administrative Code. Cities and Counties must comply with these applicable statutes, rules and any additional requirements as established through the Legislative process.

E. Local Housing Partnership: The SHIP Program encourages building active partnerships between government, lending institutions, builders and developers, not-for-profit and community-based housing providers and service organizations, providers of professional services related to affordable housing, advocates for low-income persons, real estate professionals, persons or entities that can provide housing or support services and lead agencies of the local continuums of care.

F. Leveraging: The Plan is intended to increase the availability of affordable residential units by combining local resources and cost-saving measures into a local housing partnership and using public and private funds to reduce the cost of housing. SHIP funds may be leveraged with or used to supplement other Florida Housing Finance Corporation programs, and to provide a local match to obtain federal housing grants or programs.

G. Public Input: Public input is solicited in a variety of different ways. Staff conducts meetings with housing providers, lenders, community partners, and social service providers. Publications of legal advertisements are used to announce the Notice of Funding Availability and to request input on developing or amending the Local Housing Assistance Plan (LHAP). The Affordable Housing Advisory Committee (AHAC) assists with developing the LHAP. All AHAC and the Sumter County Board of County Commissioners (SCBOCC) meetings are public and advertised. Copies of the plan are provided upon request.

H. Advertising and Outreach: SHIP funding availability shall be advertised in a newspaper of general circulation and periodicals serving ethnic and diverse neighborhoods, at least 30 days before the beginning of the application period. If no funding is available due to a waiting list, no notice of funding availability is required.

I. Waiting List/Priorities: A waiting list will be established when there are eligible applicants for strategies that no longer have funding available. The households on the waiting list will be notified of their status. Applicants will be maintained in an order that is consistent with the date and time their application was submitted as well as the funding priority described below. Applicants are assisted by the date and time their completed

application was received and the availability of funding for the strategy applied for by the applicant. Every applicant who applies for assistance is placed on the main housing waiting list and issued an applicant number. The list identifies the applicant number, name, assistance type, income category, status information, special needs, and fiscal year assisted.

Applications for Emergency Repair and Purchase Assistance without Rehabilitation are accepted until all funds are expended. Applications for Demolition/Reconstruction assistance are accepted once a year when funding has been allocated. The county will accept applications during the advertised "Application Period" listed in the Notice of Funding Availability. If no funding is available due to a waiting list, the Notice of Funding Availability will not be published. Applicants, who apply for the demolition/reconstruction assistance during the open application cycle, are placed on the main housing waiting list due to limited funding for the strategy. When funding is available, applicants will be selected and attend an appointment to update their application.

The following priority for funding described/listed here apply to all strategies unless otherwise stated:

The only priority given is to meet expenditure requirements outlined in Florida Statutes § 420.9075 and Chapter 67-37 Florida Administrative Code which governs the State Housing Initiatives Partnership (SHIP) program. Sumter County does not offer any other ranking priorities.

J. Discrimination: Sumter County Code, Chapter 12, Article II, Fair Housing Sec. 12-16. It is the policy of the County of Sumter, in keeping with the laws of the United States of America and the spirit of the Constitutions of the State of Florida, to promote through fair, orderly, and lawful procedure, the opportunity for each person so seeking to obtain housing of such person's choice in this county, without regard to race, color, national origin, religion, sex, marital status, familial status, disability, pregnancy, or age and to prohibit housing discrimination. This policy will apply to the SHIP award application process for eligible housing.

K. Support Services and Counseling: Sumter County Housing Services partners with the University of Florida's Institute of Food and Agricultural Services (UF/IFAS) Extension Office to offer a homebuyer/homeowner educational program. The Money Matters Educational Home Flow Program provides training in different areas of financial management and wellness, credit counseling, foreclosure prevention, and home maintenance. Participants learn how to obtain the manageable tools which could improve their financial future. Sumter County Transit is available to provide public transportation.

L. Purchase Price Limits: The sales price or value of new or existing eligible housing may not exceed 90% of the average area purchase price in the statistical area in which the eligible housing is located. Such average area purchase price may be that calculated for any 12-month period beginning not earlier than the fourth calendar year prior to the year in which the award occurs. The sales price of new and existing units, which can be lower but may not exceed 90% of the median area purchase price established by the U.S. Treasury Department or as described above.

The methodology used is:

U.S. Treasury Department	x
Local HFA Numbers	

M. Income Limits, Rent Limits and Affordability: The Income and Rent Limits used in the SHIP Program are updated annually by the Department of Housing and Urban Development and posted at www.floridahousing.org.

"Affordable" means that monthly rents or mortgage payments including taxes and insurance do not exceed 30 percent of that amount which represents the percentage of the median annual gross income for the households as indicated in Sections 420.9071, F.S. However, it is not the intent to limit an individual household's ability to devote more than 30% of its income for housing, and housing for which a household devotes more than 30% of its income shall be deemed Affordable if the first institutional mortgage lender is satisfied that the household can afford mortgage payments in excess of the 30% benchmark and in the case of rental housing does not exceed those rental limits adjusted for bedroom size.

N. Welfare Transition Program: Should an eligible sponsor be used, a qualification system and selection criteria for applications for Awards to eligible sponsors shall be developed, which includes a description that demonstrates how eligible sponsors that employ personnel from the Welfare Transition Program will be given preference in the selection process.

O. Monitoring and First Right of Refusal: In the case of rental housing, the staff and any entity that has administrative authority for implementing the local housing assistance plan assisting rental developments shall annually monitor and determine tenant eligibility or, to the extent another governmental entity provides periodic monitoring and determination, a municipality, county or local housing financing authority may rely on such monitoring and determination of tenant eligibility. However, any loan or grant in the original amount of $10,000 or less shall not be subject to these annual monitoring and determination of tenant eligibility requirements. Tenant eligibility will be monitored annually for no less than 15 years or the term of assistance whichever is longer unless as specified above. Eligible sponsors that offer rental housing for sale before 15 years or that have remaining mortgages funded under this program must give a first right of refusal to eligible nonprofit organizations for purchase at the current market value for continued occupancy by eligible persons.

P. Administrative Budget: A line-item budget is attached as Exhibit A. The county finds that the monies deposited in the local housing assistance trust fund are necessary to administer and implement the local housing assistance plan.

Section 420.9075 Florida Statutes and Chapter 67-37, Florida Administrative Code, states: *"A county or an eligible municipality may not exceed the 5 percent limitation on administrative costs, unless its governing body finds, by resolution, that 5 percent of the local housing distribution plus 5 percent of program income is insufficient to adequately pay the necessary costs of administering the local housing assistance plan."*

Section 420.9075 Florida Statutes and Chapter 67-37, Florida Administrative Code, further states: "*The cost of administering the program may not exceed 10 percent of the local housing distribution plus 5 percent of program income deposited into the trust fund, except that small counties, as defined in s. 120.52(19), and eligible municipalities receiving a local housing distribution of up to $350,000 may use up to 10 percent of program income for administrative costs." The applicable local jurisdiction has adopted the above findings in the resolution attached as Exhibit E.*

Q. Program Administration: Administration of the local housing assistance plan will be performed by:

Entity	Duties	Percentage
Local Government	Administration of the local housing assistance plan is solely performed and maintained by the Sumter County Board of County Commissioners.	100%
Third Party Entity/Sub-recipient	N/A	N/A

R. Project Delivery Costs: Sumter County does not have any project delivery costs.

S. Essential Service Personnel Definition: For SHIP funding, the county considers the following groups as Essential Services Personnel Health Care Employees, Federal State, County, Municipal, Community Development District Employees, and all members of the United States Armed Services regardless of status.

T. Describe efforts to incorporate Green Building and Energy Saving products and processes: Sumter County will incorporate green building requirements in building specifications for new construction and emergency repair to include:

1. Energy saving rated insulated single hung windows;
2. Insulated steel exterior doors;
3. Required a minimum of R38 attic insulation;
4. All interior paint to be low VOC (less than 50 grams per gallon);
5. The installation of showerheads that use less than 2.5 GPM and faucets using less than 2 GPM;
6. Energy Star rated appliances to include stove, refrigerator and water heater;
7. Energy star rated reversible ceiling fans in the bedrooms and living room;
8. Minimum 15 SEER rating for air conditioner and minimum 8.2 HSPF for heat pump;
9. Programmable thermostat for the HVAC unit;
10. Low-flush or low-flow toilets which use 1.6 gallons per flush or less; and
11. A storm door will be installed at the front entrance of a new home to help extend energy efficiency.

U. Describe efforts to meet the 20% Special Needs set-aside: The County will collaborate with social service agencies serving the designated special needs populations to achieve the goal of the special needs set-aside. The requirement will be met through emergency repair and demolition/reconstruction strategies.

V. Subordination and Short Sale Policy and Procedure: Subordinating a mortgage held by Sumter County Board of County Commissioners (SCBOCC) to allow for refinancing or modifying a mortgage for a housing unit that has been assisted by SHIP or any other local, state or federal funding must meet the following conditions for the request to be considered:

1. The new interest rate must be lower than the original mortgage;
2. The new loan must be a fixed mortgage. Adjustable rate mortgage (ARM), prepayment penalties, negative amortization, balloon loans, reverse mortgages or owner financing will not be approved;
3. The new mortgage must not be greater than the original mortgage to obtain the home;
4. No cash out to the homeowner or cash for debt consolidation; and
5. The loan and first mortgage must be in good standing for a minimum of two years.

Subordination of Mortgage will not be approved when SCBOCC holds the first mortgage. If the above criteria have been met, documentation identifying the following must be submitted:

1. Written subordination request from the homeowner; and
2. A loan commitment on the financial institution's letterhead reflecting the mortgage amount, interest rate, terms, monthly payment, and instructions on where to send the original executed Subordination Agreement for recording.

Subordination requests (including requested documentation) can be faxed, mailed, emailed or hand delivered to Sumter County Housing Services. The processing time will be approximately 20 business days from receipt of the subordination request with required documentation. The homeowner will be notified once a final determination has been made. The SCBOCC will execute the Subordination Agreement and the closing agency for the new lender will be responsible for recording the document.

In the event of a short sale request, staff will review the terms of the request and make a recommendation to the County Administrator for approval or denial. If approved, all parties will be notified and given instructions on where to mail the final payment. After the payment has cleared, a request will be submitted for the SCBOCC to execute a Satisfaction of Mortgage to release the outstanding lien. The closing agent for the buyer will be responsible for recording the document.

W. Complaints: The Program Administrator is authorized by the County to make all determinations of eligibility for assistance and level of assistance, scheduling of rehabilitation, demolition, reconstruction, record retention, and contract management. All complaints must be submitted in writing within thirty (30) days of its occurrence. If the complainant is not satisfied with the Program Administrator's response, the issue will be presented to the Division Director for review. The Division Director will review the complaint and consider program regulations, local policies, and the availability of funds when making a decision. If the Division Director cannot resolve the complaint, the issue will be presented to the County Administrator for review and final resolution. Responses will be issued in writing.

X. Common Procedures for all strategies administered by Sumter County Housing Services:

1. Every applicant must complete a housing application;
2. All applications are accepted by a scheduled appointment with the Head of Household and all adult members in attendance;
3. The Head of Household and all adult members must sign all verification forms, authorization for release of information, and any other necessary forms required for determination of program eligibility;
4. The household assisted must be income qualified;
5. Applicants must provide all documentation requested for income, eligibility and qualification determination;
6. Third party verification of income and assets will be obtained by housing staff;
7. Applicants may submit a completed SHIP application to Sumter County Housing Services for determination of eligibility at any time unless the waiting list is closed; and
8. The Head of Household and all adult members must sign the Income Certification form.

Y. Conflict of Interest: All applicants that may have a business or familial relationship with a member of the local governing body, the Affordable Housing Advisory Committee, an employee with Sumter County, Program Administrator or a participating construction contractor must fully disclose this relationship at the time of application. The County Administrator will deal with any conflict locally. Before an applicant with a real conflict is given final approval for participation, the County Attorney must approve the application.

Z. Describe efforts to reduce homelessness:

1. Sumter County Housing as part of Sumter County Economic Development (Housing) collaborates and participates in the Continuum of Care (COC) program for Citrus, Hernando, Lake and Sumter counties, sponsored by Mid Florida Homeless Coalition, to encourage partnerships that will assist in reducing and preventing homelessness.
2. Housing Services provides individuals and families experiencing homelessness:
   a) Resources and contact information to housing providers, public assistance benefits, CareerSource of Central Florida, legal aid, and community-based services;
   b) Help with completing rental and public assistance applications; and
   c) Aid with addressing issues that may impede access to housing such as credit history and unpaid debt by connecting individuals and families with credit/debt management agencies and financial education organizations.
3. Housing utilizes the demolition/reconstruction program to assist displaced homeowners with building a new house when their current home is substandard and unlivable.
4. Housing Services provides letters of support to agencies who are applying for an Emergency Solution Grant or other grant programs, which could help the citizens of Sumter County.
5. Housing Services encourages opportunities, which include but are not limited to, rural development apartment complexes, group homes, foster care facilities, multifamily developments, and tax credit residential complexes.
6. Sumter County Economic Development provides support to existing industry and recruitment of new industry to Sumter County as an effort to maintain and stimulate jobs for our community.

Section II. LHAP Strategies:

A. Emergency Repair	Code: **6**

a. Summary: SHIP funds will be made available to homeowners for emergency repairs to their owner-occupied residence. Repairs include:
   1. Septic system repair or replacement;
   2. Roof replacement;
   3. Well repair or replacement;
   4. All cost associated with connecting eligible residences to a municipality public water and sewer main;
   5. HVAC system repair or replacement including the installation of a new heating unit if the homeowner does not have an existing system;
   6. Removal of trees or tree trimming which could cause damage to the home;
   7. Electrical upgrade to meet current code; and
   8. The installation of ramps and handicap accessible bathrooms, which require immediate attention, and will make the residence more accessible to persons who have special needs.

b. Fiscal Years Covered: 2019-2020, 2020-2021, 2021-2022

c. Income Categories to be served: Very low, low and moderate

d. Maximum award: $15,000.00

e. Terms:
   1. Repayment loan/deferred loan/grant: Assistance shall be in the form of a loan secured by a recorded mortgage and promissory note with monthly payments required unless the cost is $1,500 or less, then it will be in the form of a forgivable loan.
   2. Interest Rate: 0% interest
   3. Years in loan term: Five (5) years for a forgivable loan and Twenty (20) years for a loan.
   4. Forgiveness: All forgivable loans will be forgiven after five years. This will be a lump sum forgiveness not prorated.
   5. Repayment: All loans are amortized for twenty years with monthly payments required. All funds repaid to Sumter County shall be considered "program income" as defined in F.S. 420.9071(24). The homeowner may repay the outstanding balance without penalty at any time during the loan period.
   6. Default: The loan will be determined to be in default if any of the following occurs: sale, transfer, or conveyance of property; conversion to rental property; loss of homestead exemption status; or failure to occupy the home as a primary residence. If any of these occur, the outstanding balance will be due and payable. In cases where the qualifying homeowner(s) die(s) during the loan term, a SHIP eligible heir who will occupy the home as a primary residence may assume the loan or forgivable loan. The heir will be required to legally transfer the property into their name, execute an assumption of mortgage agreement, and obtain a new homeowner's insurance policy.

If the legal heir is not SHIP eligible or chooses not to occupy the home, the outstanding balance of the loan will be due and payable.

If a superior mortgage holder forecloses on the home, the county will make an effort to collect funds through the legal process if it is determined that adequate funds may be available to justify pursuing a repayment.

f. Recipient Selection Criteria: Assistance is provided on a first-qualified, first-served basis with the priority described in Section 1. (I) of this plan. If a waiting list exists and the projected wait time for assistance is more than three months, the strategy will be closed until all applicants on the list have been assisted.

g. Sponsor Selection Criteria: N/A

h. Additional Information: Assistance will only be provided for homes that are owner-occupied and used as a primary residence. Mobile, modular, and manufactured homes are not eligible for assistance. Proof of Homestead Exemption is required, and all property taxes must be current. The county will only take first and second mortgage position. In cases where more than one mortgage exists, at the time of application, the applicant will be denied assistance. If there is a superior mortgage in the first position, the account must be current. A loan will be awarded for the money required to complete the project and allow the homeowner to qualify; therefore, the maximum will not be awarded in all cases. The applicant will be required to participate in homeownership counseling given by the UF/IFAS Extension Office and provide a Certificate of Completion. Recipients of SHIP emergency repair funds will be eligible for this strategy one time only.

b. Demolition/Reconstruction	Code: **4**

a. Summary: SHIP funds will be awarded to homeowners for the construction of a new home to replace their unsafe structure where rehabilitation is not financially feasible or has been destroyed by fire. Funds will be used for the demolition of the existing home and all other unsafe structures that pose an immediate threat to the public's health, safety, and welfare located on the property. Eligible expenses may also include:
   1. Any necessary upgrade or replacement of the well and septic system or connection to a municipality public water and sewer service;
   2. Removal of trees which could cause damage to the new home or any required tree trimming;
   3. Installation of ramps or accessibility modifications for persons with special needs;
   4. Payoff existing mortgage(s) if the amount owed is under $5,000.00; and
   5. Re-zoning or variance fees required to resolve outstanding property issues.

b. Fiscal Years Covered: 2019-2020, 2020-2021, 2021-2022

c. Income Categories to be served: Very low, low and moderate

d. Maximum award: $100,000.00

e. Terms:
   1. Repayment loan/deferred loan/grant: Assistance shall be in the form of a loan secured by a recorded mortgage and promissory note with monthly payments required.
   2. Interest Rate: 0%
   3. Years in loan term: Thirty (30) years
   4. Forgiveness: N/A
   5. Repayment: All loans are amortized for thirty years with monthly payment required. All funds repaid to Sumter County shall be considered "program income" as defined in F.S. 420.9071(24). The homeowner may repay the outstanding balance without penalty at any time during the loan period.
   6. Default: The loan will be determined to be in default if any of the following occurs: sale, transfer, or conveyance of property; conversion to rental property; loss of homestead exemption status; or failure to occupy the home as a primary residence. If any of these occur, the outstanding balance will be due and payable. In cases where the qualifying homeowner(s) die(s) during the loan term, a SHIP eligible heir who will occupy the home as a primary residence may assume the loan. The heir will be required to legally transfer the property into their name, execute an assumption of mortgage agreement, and obtain a new homeowner's insurance policy. If the legal heir is not SHIP eligible or chooses not to occupy the home, the outstanding balance of the loan will be due and payable. The County reserves the right to foreclosure through the legal process if payment is not made.

f. Recipient Selection Criteria: Assistance is provided on a first-qualified, first-served basis with the priority described in Section 1. (I) of this plan, following the annual advertisement of the availability of SHIP funds. If a waiting list exists and the projected wait time for assistance is more than two years, the strategy will remain closed until all applicants on the list have been assisted.

g. Sponsor Selection Criteria: N/A

h. Additional Information: The estimated repair costs must exceed 80% of the value of the home according to Sumter County Property Appraiser's market value listing to qualify for demolition/reconstruction assistance. A determination will be made after an inspection has been conducted. SHIP assistance will only be provided for homes that will be owner-occupied and used as a primary residence. Proof of Homestead Exemption is required, and all property taxes must be current. The property must meet local zoning and code regulations before assistance is provided. In cases where the entire property is located in a flood zone, assistance will be denied. There must be adequate space outside of the flood zone for all construction activities to award assistance. The County will only take the first mortgage position. In cases where the homeowner has an existing mortgage(s), assistance will only be provided if the current mortgage(s) are under $5,000.00 and the county can obtain clear title to the property. Any existing mortgage(s) must be in current standing at the time of application to be eligible for payoff with SHIP funds. A loan will be awarded for the money required to complete the project and allow the homeowner to qualify; therefore, the maximum will not be awarded in all cases. The applicant will be required to participate in homeownership counseling given by the UF/IFAS Extension Office and provide a Certificate of Completion. Recipients of SHIP demolition/reconstruction funds will not be eligible for any other housing assistance, except in the case of a disaster. All work will be performed according to the new construction specifications. The contractor will be responsible for site cleanup, disposal of construction debris, and pulling all required permits. Demolition/reconstruction assistance will not include relocation costs.

If the bids exceed the maximum award amount, the homeowner will be given the opportunity to pay all costs above the maximum award amount paid for by the program. If the homeowner declines the opportunity to pay the additional costs, then all bids will be rejected, and the applicant will be deemed ineligible due to the excessive project costs. A written letter will be sent to the homeowner within ten (10) days stating the reason for ineligibility. Housing staff will review the construction costs bi-annually. If it is determined that construction costs have increased by 10% or more, staff will prepare and submit a request for an LHAP amendment to increase the maximum award amount for this strategy.

The Board of County Commissioners utilizes DemandStar/Onvia to broadcast all formal solicitations. Contractors must register with DemandStar to receive automatic notification of formal solicitation opportunities. An Invitation to Bid (ITB), which is a written solicitation for competitive sealed bids with the title, date, and hours of the public bid opening designated and specifically defining the service for which bids are sought, will be used for all demolition/reconstruction projects. The Purchasing Department will be responsible for posting the ITB on DemandStar, scheduling all dates relating to the ITB, conducting the pre-bid conference and site visit, and leading all bid openings. The Purchasing Department will formally post the award information on www.demandstar.com for each formal solicitation once the bidding process is complete.

The ITBs will describe the requirements of the program clearly, accurately, and completely. All ITBs shall be awarded to the responsive, responsible, and lowest priced bidder. The County Administrator can waive this rule if it is determined that there is an inadequate pool of qualified bidders, if the other bids are excessive, or if other extenuating circumstances arise. The applicant's file will be properly

documented if the policy is waived.

i. Special circumstances: Demolition/Reconstruction assistance will be provided to homeowners who lost their owner-occupied primary residence in a fire within two years of the application date. All requirements listed above will apply along with the following:

1. The homeowner must provide a copy of the fire report at the time of application;
2. The home must have been covered by insurance unless the homeowner can provide written documentation that insurance could not be obtained or was canceled due to circumstances not under the control of the homeowner;
3. If there are insurance proceeds, they must be used first and SHIP will fund any shortfall;
4. If the home was covered by insurance, the homeowner must disclose all information regarding any settlement amount received or to be received;
5. The settlement funds must be used to pay for outstanding mortgages or debt owed against the property, and structure replacement; and
6. The residence must have been damaged beyond repair.

c. Purchase Assistance without Rehabilitation	Code: **2**

a. Summary: Funds will be awarded for down payment and closing costs to assist eligible first-time homebuyers with the purchase of a newly constructed or existing site built house.

Prospective homebuyers must qualify as a First Time Homebuyer under the HUD definition as:

1. An individual who has had no ownership in a principal residence during the 3-year period ending on the date of purchase (closing date) of the property; or
2. An individual who has only owned with a former spouse while married; or
3. An individual who is a displaced homemaker and has only owned with a spouse; or
4. An individual who has only owned a principal residence not permanently affixed to a permanent foundation by applicable regulations; or
5. An individual who has only owned a property that did not comply with state, local or model building codes and which cannot be brought into compliance for less than the cost of constructing a permanent structure.

b. Fiscal Years Covered: 2019-2020, 2020-2021, 2021-2022

c. Income Categories to be served: Very low, low and moderate

d. Maximum award: $10,000.00

e. Terms:

1. Repayment loan/deferred loan/grant: Assistance shall be in the form of a loan secured by a recorded mortgage and promissory note with monthly payments required.
2. Interest Rate: 0 %
3. Years in loan term: Twenty (20) years
4. Forgiveness: N/A
5. Repayment: All loans are amortized for twenty years with monthly payments required. All funds repaid to Sumter County shall be considered “program income” as defined in F.S. 420.9071(24). The homeowner may repay the outstanding balance without penalty at any time during the loan period.
6. Default: The loan will be determined to be in default if any of the following occurs: sale, transfer, or conveyance of property; conversion to rental property; loss of homestead exemption status; or failure to occupy the home as a primary residence. If any of these occur, the outstanding balance will be due and payable. In cases where the qualifying homeowner(s) die(s) during the loan term, a SHIP eligible heir who will occupy the home as a primary residence may assume the loan. The heir will be required to legally transfer the property into their name, execute an assumption of mortgage agreement, and obtain a new homeowner’s insurance policy. If the legal heir is not SHIP eligible or chooses not to occupy the home, the outstanding balance of the loan will be due and payable. If a superior mortgage holder forecloses on the home, the county will make an effort to collect funds through the legal process if it is determined that adequate funds may be available to justify pursuing a repayment.

f. Recipient Selection Criteria: Assistance is provided on a first-qualified, first-served basis with the priority described in Section 1. (I) of this plan. If a waiting list exists and the projected wait time for assistance is

more than three months, the strategy will be closed until all applicants on the list have been assisted.

g. Sponsor Selection Criteria: N/A

h. Additional Information: Applicants must secure a first mortgage with a fixed interest rate for the entire term of the loan. The County will only take the second mortgage position. Assistance will only be provided for the purchase of homes that will be owner-occupied and used as the primary residence. Mobile, modular and manufactured homes are not eligible for assistance. The applicant will be required to participate in homeownership counseling given by the UF/IFAS Extension Office and provide a Certificate of Completion before closing. Recipients of Purchase Assistance without Rehabilitation will not be eligible for any other SHIP assistance for twenty years and only if the outstanding balance is paid, except for a disaster.

d. Disaster Repair/Mitigation	Code: **5**

a. Summary: Funds will be awarded to applicants in need of home repairs directly caused by a disaster that is declared by an Executive Order of the President or Governor. Repairs may include:
   1. Immediate threats to health and life safety (sewage, damaged windows, roofing) in cases where the home is still habitable;
   2. Imminent residual damage to the home (such as damage caused by a leaking roof) in cases where the home is still habitable;
   3. Repairs necessary to make the home habitable; and
   4. Repairs to mitigate dangerous situations (exposed wires).

b. Fiscal Years Covered: 2019-2020, 2020-2021, 2021-2022

c. Income Categories to be served: Very low, low and moderate

d. Maximum award: $10,000.00

e. Terms:
   1. Repayment loan/deferred loan/grant: Funds will be awarded as a grant with no recapture terms.
   2. Interest Rate: N/A
   3. Years in loan term: N/A
   4. Forgiveness: N/A
   5. Repayment: N/A
   6. Default: N/A

f. Recipient Selection Criteria: Assistance is provided on a first-qualified, first-served basis with the priority described in Section 1. (I) of this plan.

g. Sponsor Selection Criteria: N/A

h. Additional Information: SHIP assistance will only be provided for homes that are owner-occupied and used as a primary residence. Proof of Homestead Exemption is required, and all property taxes must be current. Mobile, modular, and manufactured homes are not eligible for assistance. If the homeowner is insured, proceeds from the insurance and other sources must be used first before SHIP funds, except for the payment of the deductible.

III. LHAP Incentive Strategies

In addition to the **required Incentive Strategy A and Strategy B**, include all adopted incentives with the policies and procedures used for implementation as provided in Section 420.9076, F.S.:

A. **Expedited Permitting**: Permits as defined in s. 163.3177 (6) (f) (3) for affordable housing projects are expedited to a greater degree than other projects.

All affordable housing projects, in which the county is the lead entity in the process, receives waived building permit fees and expedited permitting. Residential permits are processed within five working days after the request is submitted. Sumter County also offers online permitting which provides the applicant a reduction in fees and time saved for permit review. Before filing any development order or permit, the applicant may consult with county staff. This pre-application meeting provides an informal discussion of the schedule and requirements as they apply to the proposed development. A pre-application consultation may prevent obstacles, which could cause a delay in approval of a development order or permit. A development review application is processed within five days upon receipt of a completed application. The full approval will depend on the type of application; however, typically, final approval is received in a maximum of three months.

Sumter County, FL Code of Ordinances Sec. 13-313 (c) Application Processing states: The Development Services department and all authorities shall make every reasonable effort to process all applications as expeditiously as possible, consistent with any public notice requirements and schedule of public hearings established by the commission, and with the need to ensure that all approvals conform to the requirements of the comprehensive plan and are in the best interests of the citizens of Sumter County.

The Sub-Agreement within the Inter-Local Service Boundary Agreement for each municipality states: The county or city will not unreasonably withhold development approval based on the provision or mitigation of Affordable Housing by a developer. Based on staff's assessment, the county complies with Florida Statutes § 163.3164 (7) & (8).

B. **Ongoing Review Process:** An ongoing process for review of local policies, ordinances, regulations and plan provisions that increase the cost of housing prior to their adoption.

Housing staff actively reviews policies, procedures, BOCC meeting agendas, ZAB meeting agendas, and amendments regarding affordable housing and residential housing developments. Sumter County does not currently have strict zoning regulations that would increase the cost of housing or restrict the development of affordable housing. If there is an item, which may affect affordable housing, it is brought to the attention of the Division Director. The AHAC meets quarterly to discuss current SHIP projects, funding, and affordable housing-related activities. Staff gives any recommendations from the committee to the Division Director for County Administrator and SCBOCC consideration. The potential to increase the cost of housing shall not in itself be sufficient to recommend the denial of any proposed changes to existing policies, procedures, ordinances, regulations, or plan provisions.

C. Other Incentive Strategies Adopted:

The allowance of flexibility in densities for affordable housing.

The Board of County Commissioners adopted Ordinance 2018-20 on July 10, 2018. The Ordinance created two high-density residential zoning districts, HDR-12 and HDR-24. The HDR-12 designation allows for twelve (12) units per acre, and the HDR-24 designation allows for twenty-four (24) units per acre. The new high-density residential standards are an effective change to encourage affordable housing.

The allowance of affordable accessory residential units in residential zoning districts.

Sumter County's land development code currently provides for an accessory residential cottage for any residential lot that is at least half an acre in size. If there is a principal residence on a half-acre lot, the property owner can construct an accessory residential cottage. The cottage is limited in size and is limited to the use of family members. The structure would not be available for lease, rent or sale to the public. The occupants of the residential accessory structure must be a relative of the principal residential structure occupants.

The allowance of flexible lot configurations, including zero-lot-line configurations, for affordable housing.

The county has several Planned Unit Development (PUD) classifications. A PUD allows a developer to submit an application that fits within certain guidelines, which can provide for special design and lot configurations. A developer can apply for a zoning district that will allow building a zero-lot-line configuration.

The preparation of a printed inventory of locally owned public lands suitable for affordable housing.

The Office of Management and Budget (OMB) maintains a list of surplus county-owned properties that may be suitable for affordable housing or for sale. Sumter County adopted the first list on October 9, 2007, and continues to maintain the list of surplus properties within OMB. OMB performs a reconciliation of county expenditures and proceeds following the closing of each sale of surplus property in the event any positive balance for all properties within the fiscal year can support additional funding for affordable housing. The transfer of funds to the Affordable Housing account is the total net profit from sales of these properties if any. The funding, when available, will assist with various housing projects consistent with the Affordable Housing Plan.

The SCBOCC approved a new policy for the donation of county-owned property for affordable housing purposes on September 26, 2017. The policy outlines how SCBOCC will offer eligible properties for affordable housing opportunities to community housing partners to meet the objective of Florida Statutes § 125.379. When the SCBOCC gains property through an escheatment tax deed, code enforcement foreclosure, or tax deed sale when associated with a

code enforcement case, these properties may not be marketable due to title defects or because they have not sold after a year of being on the market with the SCBOCC's contracted broker. When any of the conditions above render the property not marketable, then the SCBOCC may offer the property to its community housing partners with conditions for sole use in providing a new single-family site-built home or renovation of the existing site-built home on the transferred property.

The support of development near transportation hubs and major employment centers and mixed-use developments.

The county and cities promote compact growth with a variety of land use within the Municipal Overlay Areas and Joint Planning Areas around each city as a means to promote walkable communities and support downtown corridors. Sumter County uses the Joint Planning Areas to encourage development within areas that have municipal services. Economic development is encouraged, and a mixture of future land use districts are identified to encourage high-value growth consistent with the community.

Local Government Contribution to support a developer applying to Florida Housing Finance Corporation (FHFC) for State Apartment Incentive Loan (SAIL) funding to construct affordable housing developments within Sumter County.

On January 28, 2020, the Sumter County Board of County Commissioners (SCBOCC) approved application criteria for qualifications for the local government to provide support to a developer applying to FHFC for SAIL funding. Each application will be reviewed for feasibility and ability of the applicant to proceed with the construction of the development. The proposed development must be located in Sumter County, cannot be less than a total of 100 rental units, and provide a minimum of 75 percent of the development's rental units set aside for families earning 50 percent or less of the area median income. The applicant must provide evidence of the parcel and/or site control, and provide documentation of their project management experience, previous performance with local governments, compliance with FHFC financing, and percentage of successful housing developments. The project site must have approved land use and zoning, along with the commitment of infrastructure services to support the development. Sumter County will provide a local government verification of contribution fee waiver letter to approved applicants for submittal to FHFC; however, the county will only provide one local government contribution award of $10,000 (via waiver of road impact fees) per calendar year.

IV. EXHIBITS:

A. Administrative Budget for each fiscal year covered in the Plan.

B. Timeline for Estimated Encumbrance and Expenditure.

C. Housing Delivery Goals Chart (HDGC) For Each Fiscal Year Covered in the plan.

D. Signed LHAP Certification.

E. Signed, dated, witnessed or attested adopting resolution.

F. Ordinance: 2016-07, 2015-12, 2013-04, 2011-11, 2010-11, 2008-15, 2008-14, and 2000-4.

G. Interlocal Agreement. N/A

H. Other Documents Incorporated by Reference. N/A

STATE OF EMERGENCY DECLARATION EXTENSION
SUMTER COUNTY BOARD OF COUNTY COMMISSIONERS

WHEREAS, the Coronavirus Disease 2019 (COVID-19) continues to pose an imminent health risk to the residents in Sumter County; and

WHEREAS, Florida State Statutes, Chapter 252 authorizes the Chairman of the Board of County Commissioners to declare that a Local State of Emergency exists; and

WHEREAS, The Chairman of the Board of County Commissioner declared a Local State of Emergency on March 17, 2020, and extension every seven days since then; and

WHEREAS, Florida State Statutes, Chapter 252 limits each Declaration to seven (7) days; and

WHEREAS, the Sumter County Board of County Commissioners supports the Executive Orders of Governor DeSantis that are more restrictive than prior orders of Sumter County and finds that the anticipated conditions created by COVID-19 pose a threat to the health, safety, and welfare of the people of Sumter County.

THEREFORE, BY CONSIDERATION AND INCORPORATION OF THE ABOVE RECITALS, IT IS HEREBY ORDERED:

1. That the Comprehensive Emergency Management Plan remain activated through the duration of the State of Florida Declaration of a State of Emergency.

2. All public officials and employees of Sumter County are hereby directed to continue to exercise the utmost diligence in the discharge of duties required of them for the duration of this Local State of Emergency and in the execution of State and Local emergency orders, regulations, and directives.

3. The Emergency Management Director shall continue functioning as the County Coordinating Officer and shall provide overall coordination for the response to this emergency in Sumter County.

4. This Declaration shall remain in effect for seven days unless extended or dissolved.

Signed: _____ Date: May 12, 2020
Steve Printz, Chairman
Board of County Commissioners

Attest:

By: _____ Date: May 12, 2020
Caroline AlRestimawi
Clerk to the Board, Deputy Clerk